APPENDIX M WINTER AND PERMAFROST CONSTRUCTION PLAN

Public

ALASKA LNG

DOCKET NO. PF14-21-000

WINTER AND PERMAFROST CONSTRUCTION PLAN

USAP-WP-KPZZZ-00-000003-000

EXECUTIVE SUMMARY

This Plan has been prepared to fulfill the requirements of the FERC Winter Construction Plans as called for in Section III, paragraph I of its Upland Erosion Control, Revegetation, and Maintenance Plan (May 2013 version). Per paragraph I this Plan describes winter construction procedures such as right-of-way (ROW) preparation and maintenance, snow handling, access road construction and maintenance, soil handling and the feasibility of topsoil stripping. This Plan also addresses initial soil stabilization procedures following winter construction.

Between the Arctic Coastal Plain (ACP) and the Alaska Range to the south, roughly 80% of the northern 600 miles of the Alaska LNG Mainline route crosses permafrost terrain. The entire PTTL route crosses permafrost terrain. Permafrost terrain will be crossed during winter, summer and shoulder construction seasons and will require special construction techniques to limit thermal degradation and erosion of permafrost soils. These special construction techniques are described in this Plan's permafrost construction procedures.

Most of the permafrost areas along the PTTL and Mainline routes are classified as wetlands, in flat and sloped terrain. The FERC Wetland and Waterbody Construction and Mitigation Procedures directs the project sponsors to "identify any individual measures in the Procedures they consider unnecessary, technically infeasible, or unsuitable due to local conditions and fully describe any alternative measures they would use. Project sponsors shall also explain how those alternative measures would achieve a comparable level of mitigation."

The Project contends some of the measures found in the Procedures, relative to wetlands overlying permafrost soils and especially thaw sensitive soils, are technically infeasible and unsuitable due to local conditions. As prescribed, the FERC wetland crossing Procedures would lead to rapid and significant degradation of the underlying permafrost and probable conversion of the wetland to a waterbody. This is evident from historical attempts to work directly on thaw sensitive permafrost in Alaska. Well established construction techniques for crossing permafrost terrain and the overlying wetlands have been developed in Alaska. The primary goal of this Plan's construction techniques is limiting thermal and erosional degradation of the permafrost, rather than mitigation of impacts to the overlying wetlands. Many of the established permafrost construction techniques developed in Alaska are utilized in this Plan. Some of the proposed construction techniques offer comparable level of wetland impact mitigation relative to the FERC Procedures, and some do not.

This Plan provides a summary of pre-construction planning which includes proposed construction seasons, spreads and sections, ROW construction modes, and the ROW mode selection process. ROW mode selection depends on several variables including:

- Health and safety of workers
  - There is more risk during dark, cold, and snowy winter conditions.
  - Steep terrain is preferentially deemed summer construction for operational safety of heavy equipment on steep slopes as well as safer footing for workers on the ground.
- Construction season – winter, summer, shoulder (spring or fall)
  - Costs of equipment operation and maintenance are significantly higher in winter months
  - Worker and equipment productivity and efficiency is significantly lower in winter months
  - Balancing total schedule between summer and winter to best utilize resources, to optimize linear construction and minimize spread moves, and to provide continuity of employment for personnel

- Climate
- Permafrost type - thaw sensitive or thaw stable
- Soil types
- Presence of wetlands
- Longitudinal and cross slopes
- Availability of fresh water

The primary ROW Modes considered for the Project include:

- ROW Mode 1 – Ice Work Pads over permafrost in flat terrain with ample, permittable water sources such as those found on the ACP and portions of Minto Flats. (Winter)
- ROW Mode 2 – Frost Packed Work Pads over flat permafrost and over flat non-permafrost wetlands. (Winter)
- ROW Mode 3 – Matting for short, flat, isolated and saturated wetlands to provide a stable work surface. Mats will be limited to short segments because the cost to purchase, transport from the lower 48 states, and handle them is very high. (Summer)
- ROW Mode 4 – Granular Work Pads over thaw sensitive permafrost terrain, including those with wetlands, and over thaw stable soils with a thick organic layer to create a stable work surface. Summer pipeline construction with granular work pads is preferable to take advantage of temperate weather, more daylight, safer working conditions, increased productivity, and lower costs. (Winter or Summer)
- ROW Mode 5A – Conventional Grading cut and fill in thaw stable permafrost and non-permafrost terrain with cross slopes greater than 2%, including those with wetlands. (Winter or Summer)

Section VI.A.3 of the FERC Procedures limits the construction ROW to 75 feet or less through wetlands. The Project contends permafrost wetlands are so extensive along project routes it is impractical to avoid them, to route around them, or to restrict the ROW width to 75 feet. Limiting the ROW to 75 feet over long distances would adversely impact the safety of construction workers and their productivity.

DEFINITIONS

Permafrost and related terms used in this document are defined below (van Everdingen, 2005):

- Permafrost is defined as any rock or soil remaining at or below freezing (colder than 32° Fahrenheit or 0° Celsius) continuously for two or more years. This does not include the surface layer which freezes every winter and thaws every summer (the "active layer").
- Continuous permafrost refers to terrain in which permafrost occurs everywhere beneath the exposed land surface with the exception of widely scattered sites. It is typically present over 90 percent of the land surface.
- Discontinuous permafrost is permafrost occurring in some areas beneath the exposed land surface throughout a geographic region where other areas are free of permafrost. Discontinuous permafrost is subdivided into the following sub-regions:
    - Extensive discontinuous permafrost: 65 to 90% land surface coverage.
    - Intermediate discontinuous permafrost: 35 to 65% land surface coverage.
    - Sporadic discontinuous permafrost: 10 to 35% land surface coverage.
    - Isolated discontinuous permafrost: 0 to 10% land surface coverage.
- Thaw stable permafrost is ground which, upon thawing, will not experience either significant thaw settlement or loss of strength. It typically includes any soil such as gravels which are not ice-rich, meaning the total ice and water content is less than the available pore volume between mineral grains. Because of the lack of segregated ice formation, the individual soil grains will generally remain in contact with one another after the freezing process. When these soils thaw, the soil grains will have little or no distance to travel until they are in contact with each other and the soil will have minimal settlement and keep its foundation strength.
- Thaw sensitive permafrost is ground which, on thawing, will experience significant thaw settlement and suffer loss of strength to a value significantly lower than for similar material in an unfrozen condition. It is generally more common in fine-grained soils, such as silt and clays, which are frost-susceptible, meaning they form segregated ice if water is present, and heave. When these soils thaw, the soil grains will settle to come in contact with each other again. Therefore, the soil will have large thaw settlements which are often not uniform throughout an area. In addition, the thawing soils will release excess water, which will saturate the soil, causing it to lose much of its foundation strength. Water will flow downslope and erode the surface vegetation and underlying soil.

Wetlands include any area not in actively cultivated, or rotated cropland and satisfies the requirements of the current Federal methodology for identifying and delineating. Project-specific wetland group definitions listed below were developed to help with construction mode selection:

- Inundated or Saturated Wetlands – a wetland or waterbody which cannot support construction equipment without significant surface rutting or soil mixing. These wetlands and/or water bodies typically have standing water, or saturated soils at the surface. Examples include moss bogs, pond/lake edges, saturated sedge meadows.
- Stable or Non-Inundated Wetlands – a wetland where the organic and soil structure is not continuously saturated and/or stable enough to support traffic. These wetlands occur on elevated terrain within permafrost and are classified as wetlands only because of the presence of a saturated seasonal surface thaw zone (active layer).

Additional terms used in the document include:

- Topsoil – Topsoil is the uppermost layer of organic and nutrient-rich earth, commonly known as the root zone, in which grasses and herbaceous plants germinate and sustain growth during the growing season. It is typically between two to eight inches thick. It has a high moisture-retention

capacity and a high concentration of seeds, stolons, rhizomes and microorganisms relative to the underlying subsoil. Topsoil is important for agricultural production and revegetation.

- Organic Soil – Organic soil is most often composed of organic materials, such as moss (sphagnum and feather) peat, sedge peat, or wood peat, and is commonly known as peat (peatland), muck or bog/fen (muskeg). It develops in poorly to very-poorly drained areas where saturation occurs for prolonged periods. Organic soils are typically layered having a fibric (weakly decomposed), mesic (medium decomposed) and humic (strongly decomposed) layer from surface to depth. Organic soils can have a mineral component; however, the organic carbon must be greater than 17% (30% organic matter) to be considered an organic soil.
- Loose Surface Material – Material commonly known as LFH (Leaf litter; Fermentation; and Humification - the three stages of decomposition) or duff in the boreal forest, consists of leaves, twigs, branches and coarse woody materials (fallen trees) in various stages of decomposition on the forest floor. The LFH is the primary source of organics for the organic and nutrient enrichment of the mineral soil. The LFH is an important source of propagules (seed, spores, fungi and bacteria). When the LFH is mixed with the underlying mineral soil it produces an effective natural revegetation material.
- Mineral soil – soil below the organic mat comprised primarily of particulate detritus derived from mineral rocks.

TABLE OF CONTENTS

EXECUTIVE SUMMARY **2**

DEFINITIONS **4**

1.0 INTRODUCTION **8**

2.0 PURPOSE AND SCOPE **9**

- **2.1** PURPOSE AND SCOPE 9
- **2.2** PROJECT PROCEDURES 9

3.0 PRE-CONSTRUCTION PLANNING **13**

- **3.1** RIGHT-OF-WAY CONSTRUCTION MODES 13
- **3.2** CONSTRUCTION SEASONS 14
- **3.3** CONSTRUCTION SPREAD DELINEATION 17

4.0 WINTER CONSTRUCTION PROCEDURES **34**

- **4.1** RIGHT-OF WAY PREPARATION - WINTER 34
- **4.2** RIGHT-OF WAY MAINTENANCE, SNOW HANDLING, AND REMOVAL 36
- **4.3** ACCESS ROAD CONSTRUCTION AND MAINTENANCE 37
- **4.4** OTHER PIPELINE CONSTRUCTION ACTIVITIES 37

5.0 SUMMER PERMAFROST CONSTRUCTION PROCEDURES **40**

- **5.1** RIGHT-OF WAY PREPARATION – SUMMER 40
- **5.2** RIGHT-OF WAY MAINTENANCE 41
- **5.3** ACCESS ROAD CONSTRUCTION 41
- **5.4** OTHER ACTIVITIES 41

6.0 INITIAL RESTORATION PROCEDURES **43**

- **6.1** EROSION CONTROL IN PERMAFROST 43
- **6.2** DITCH LINE REHABILITATION 44
- **6.3** GRANULAR PADS REMAIN IN PLACE 44
- **6.4** MANAGEMENT OF ICE-RICH CUT SLOPES 44
- **6.5** WATERBODY BANK REHABILITATION 45
- **6.6** TOPSOIL REPLACEMENT 46
- **6.7** SEEDING 46
- **6.8** MONITORING PLAN 46

7.0 CONCLUSIONS **47**

8.0 ACRONYMS AND TERMS **51**

9.0 REFERENCES **52**

List of Figures

Figure 1: Mainline Route 8
Figure 2: Mainline Spread 1 19
Figure 3: Mainline Spread 2 21
Figure 4: Mainline Spread 3 24
Figure 5: Mainline Spread 4 26

List of Attachments

Attachment A: Right-of-Way Mode Drawings
Attachment B: ROW Mode Distribution by Spread
Attachment C: Granular Work Pad, Permafrost, and Slope Distribution by Spread
Attachment D: ROW Mode and Wetland Distribution by Spread
Attachment E: Mile by Mile ROW Mode and Wetland Distribution
Attachment F: Travel and Bypass Lane Location and Justification
Attachment G: Access Roads to ROW Location by Milepost

1.0 INTRODUCTION

The Mainline encompasses the transmission facilities to deliver gas from the North Slope near Prudhoe Bay to the LNG Plant in the Nikiski vicinity on Cook Inlet. The mainline route is shown in Figure 1.

Figure 1: Mainline Route

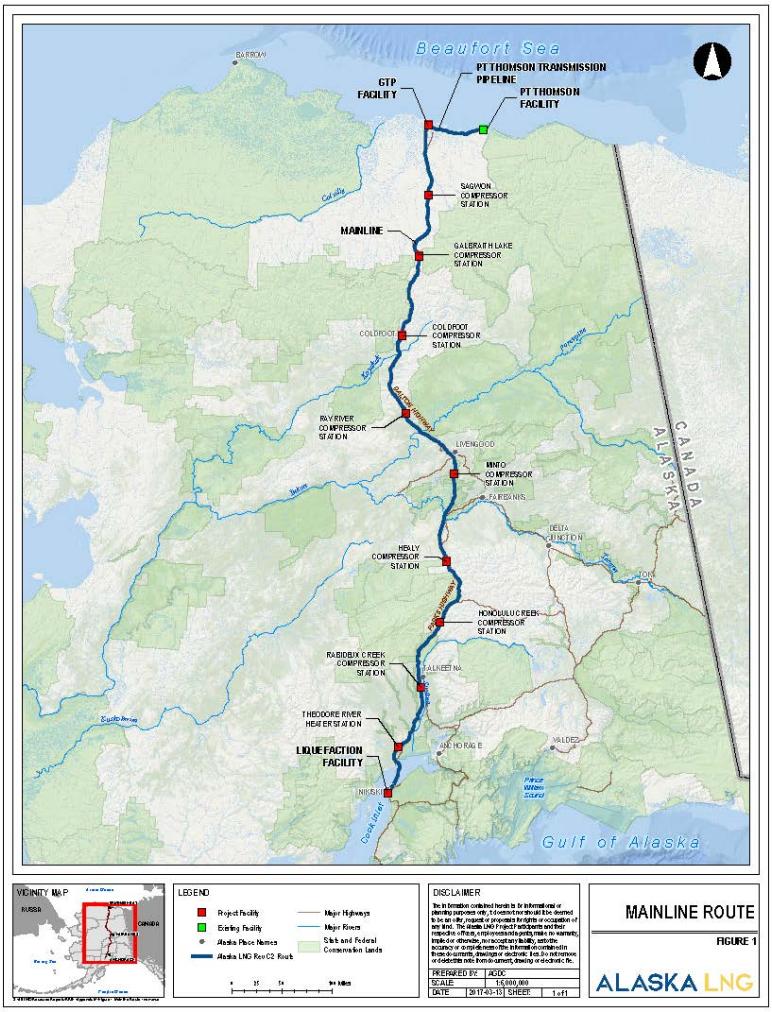

The 807-mile 42-inch diameter pipeline will be designed with necessary compression stations and cooling to operate as a dense phase buried line. The current design includes a total of eight compressor stations and one heating station to mitigate hydrate formation, pipe wetting, frost heave and thaw settlement, and to maintain pipe temperatures for fracture toughness.

In addition to the Mainline, two more pipelines will be built, both on the North Slope: The Prudhoe Bay Transmission Line (PBTL) would be a 1.2 mile, 60-inch-diameter aboveground pipeline to transport natural gas from the Prudhoe Bay Unit (PBU) Central Gas Facility (CGF) to the Gas Treatment Plant (GTP); and the Point Thomson Transmission Line (PTTL) would be an approximately 62.5-mile, 32-inch-diameter pipeline to transport natural gas from the Point Thomson Unit (PTU) to the GTP.

2.0 PURPOSE AND SCOPE

2.1 PURPOSE AND SCOPE

This Plan has been prepared to fulfill the requirements of the FERC Winter Construction Plans as called for in Section III, paragraph I of its Upland Erosion Control, Revegetation, and Maintenance Plan (May 2013 version). Per paragraph I this Plan describes winter construction procedures such as ROW preparation and maintenance, snow handling, access road construction and maintenance, soil handling and the feasibility of topsoil stripping. This Plan also addresses initial soil stabilization and final ROW restoration procedures following winter construction.

Between the Arctic Coastal Plain (ACP) and the Alaska Range to the south, roughly 80% of the northern 600 miles of the Alaska LNG Mainline route crosses permafrost terrain. The entire PTTL route crosses permafrost terrain. Permafrost terrain will be crossed during winter, summer and shoulder construction seasons and will require special construction techniques to limit thermal degradation and erosion of permafrost soils. These special construction techniques are described in this Plan's Permafrost Construction Procedures. Permafrost terrain is often classified as wetlands, so this report also addresses the project specific exceptions from the requirements of Section VI of the FERC Wetland and Waterbody Construction and Mitigation Procedures.

This Plan describes baseline construction techniques and mitigation measures based on experience gained in constructing the Trans Alaska Pipeline System, more than 40 years of Arctic construction experience on Alaska's North Slope, more than 70 years of building northern Alaska highways, as well as cold-region pipeline construction in other parts of North America.

2.2 PROJECT PROCEDURES

The following table, selectively replicated here from Resource Report No. 2 Water Use and Quality, outlines the requested modifications mentioned in this Appendix M to Resource Report No. 1, to accommodate the Alaska-specific conditions which would be encountered during construction of this Project.

TABLE 2.6-2

Requested Alternative Measures from the 2013 FERC Procedures for Construction and Operation of the Interdependent Facilities

Section No.	FERC Procedures (May 2013)	Alaska LNG's Proposed Measure	Justification
VI	WETLAND CROSSINGS		
VI A.3	Limit the width of the construction right-of-way to 75 feet or less. Prior written approval of the Director is required where topographic conditions or soil limitations require that the construction right-of-way width within the boundaries of a federally delineated wetland be expanded beyond 75 feet. Early in the planning process the project sponsor is encouraged to identify site-specific areas where excessively wide trenches could occur and/or where spoil piles could be difficult to maintain because existing soils lack adequate unconfined compressive strength.	Limit the width of the construction right-of-way to 110 feet or less. Prior written approval of the Director is required where topographic conditions or soil limitations, safety, construction efficiency, and logistics practicability require that the construction right-of-way width within the boundaries of a federally delineated wetland be expanded beyond 110 feet. Early in the planning process the Project is encouraged to identify site-specific areas where excessively wide trenches could occur and/or where spoil piles could be difficult to maintain because existing soils lack	Refer to justifications provided in Table 1 Proposed Modification to the FERC Staff's Procedures Section VI.A.3.

TABLE 2.6-2

Requested Alternative Measures from the 2013 FERC Procedures for Construction and Operation of the Interdependent Facilities

Section No.	FERC Procedures (May 2013)	Alaska LNG's Proposed Measure	Justification
		adequate unconfined compressive strength.	
VI.B.1.c	The construction right-of-way may be used for access when the wetland soil is firm enough to avoid rutting or the construction right- of-way has been appropriately stabilized to avoid rutting (e.g., with timber riprap, prefabricated equipment mats, or terra mats). In wetlands that cannot be appropriately stabilized, all construction equipment other than that needed to install the wetland crossing shall use access roads located in upland areas. Where access roads in upland areas do not provide reasonable access, limit all other construction equipment to one pass through the wetland using the construction right-of-way.	The construction right-of-way may be used for access when the wetland soil is firm enough to avoid rutting or the construction right- of-way has been appropriately stabilized to avoid rutting (e.g., with timber riprap, prefabricated equipment mats, or terra mats). In wetlands that cannot be appropriately stabilized, all construction equipment other than that needed to install the wetland crossing shall use access roads located in wetland soils that are stable (i.e., can support equipment without soil mixing) or upland areas. Where access roads in stable wetlands or upland areas do not provide reasonable access, limit all other construction equipment to one pass through the wetland using the construction right-of-way, where practical.	Revised wording provided to reflect logistical and operational constraints of working in a predominantly wetland environment.
VI.B.1.d	The only access roads, other than the construction right-of-way, that can be used in wetlands are those existing roads that can be used with no modifications or improvements, other than routine repair, and no impact on the wetland.	Use existing access roads where possible. The Applicant would request approval by the USACE for the construction of new roads or modification of existing roads in wetlands.	Given the pervasiveness of wetlands of varying types along the route, and the lack of existing road infrastructure given the remoteness of much of the pipeline route, it is not practical to limit access to the construction right-of-way and to existing roads. New access to the right-of-way, across some wetlands will be required.
VI.B.2.e	Limit construction equipment operating in wetland areas to that needed to clear the construction right-of-way, dig the trench, fabricate and install the pipeline, backfill the trench, and restore the construction right-of-way.	Limit construction equipment operating in wetland areas that would be crossed using ROW construction mode 3 (summer matted wetlands) to that needed to clear the construction right-of-way, dig the trench, fabricate and install the pipeline, backfill the trench, and restore the construction right-of-way.	Given the pervasiveness of wetlands of differing type along the Project route in Alaska, additional clarity is provided to describe the basis for limiting equipment operation in areas of saturated soils or standing water.
VI.B.2. f	Cut vegetation just above ground level, leaving existing root systems in place, and remove it from the wetland for disposal. The project sponsor can burn woody debris in wetlands, if approved by the COE and in accordance with state and local regulations, ensuring that all remaining woody debris is removed for disposal.	Cut vegetation just above ground level, grind stumps to achieve a trafficable working surface, leaving existing root systems in place, and remove it from the wetland for disposal. The Project can burn woody debris in wetlands, if approved by the USACE and in accordance with state and local regulations, ensuring that all	Improves clarity on construction procedures that would allow for safe use of a work surface by equipment and vehicles.

TABLE 2.6-2

Requested Alternative Measures from the 2013 FERC Procedures for Construction and Operation of the Interdependent Facilities

Section No.	FERC Procedures (May 2013)	Alaska LNG's Proposed Measure	Justification
		remaining woody debris is removed for disposal.	
VI.B.2.g	Limit pulling of tree stumps and grading activities to directly over the trenchline. Do not grade or remove stumps or root systems from the rest of the construction right-of-way in wetlands unless the Chief Inspector and Environmental Inspector determine that safety-related construction constraints require grading or the removal of tree stumps from under the working side of the construction right-of-way.	Limit pulling of tree stumps to directly over the trenchline and the spoil side where grading is performed. Do not grade or remove stumps or root systems from the rest of the construction right-of-way in wetlands unless the Chief Inspector and Environmental Inspector determine that safety-related construction constraints require grading or the removal of tree stumps from under the working side of the construction right-of-way.	Wetlands with cross slopes require grading to build a flat, working surface that provides safe access by equipment and vehicles.
VI.B.2.h	Segregate the top 1 foot of topsoil from the area disturbed by trenching, except in areas where standing water is present or soils are saturated. Immediately after backfilling is complete, restore the segregated topsoil to its original location.	Segregate approximately the top 1 foot of organic material from the area disturbed by grading (trench and spoil side), except in areas where standing water is present or soils are saturated or frozen or where the ditch is opened by "Drill & Shoot". Immediately after backfilling is complete, restore the segregated organic material back to the trench.	Changed reference from topsoil to organic material to reflect the varying depth of topsoil throughout the Project area. The depth of 1 foot reflects the practical minimum depth of organic material that can be segregated. Additional notes added to reflect the conditions under which it is technically infeasible, due to location conditions, to segregate organic material e.g. inundated wetlands, frozen ground (winter construction) or 'drill and shoot' is required to open the trench.
VI.B.2. i	Do not use rock, soil imported from outside the wetland, tree stumps, or brush riprap to support equipment on the construction right-of-way.	Do not use tree stumps, or brush riprap to support equipment on the construction ROW. Gravel fill work pads may be used to provide safe working conditions for equipment and personnel and minimize disturbance to the underlying permafrost and thaw sensitive soil regime.	Project may, where necessary, use locally sourced granular fill to minimize disturbance to underlying permafrost and thaw sensitive soils, and provide safe working conditions in sloping terrain conditions in the season of construction (slopes >5% grade in winter and any slope in summer where permafrost or thaw sensitive soil is found in the subsurface.
VI.B.2. j	If standing water or saturated soils are present, or if construction equipment causes ruts or mixing of the topsoil and subsoil in wetlands, use low-ground-weight construction equipment, or operate normal equipment on timber riprap, prefabricated equipment mats, or terra mats.	If standing water or saturated soils are present, or if construction equipment causes ruts or mixing of the organic material and subsoil in wetlands, use low-ground-weight construction equipment, or operate normal equipment on timber riprap, prefabricated equipment mats, or terra mats. Soil fill or rock riprap may be used to stabilize the ROW where authorized as permanent fill by the USACE for jurisdictional wetlands. Frost-packing may be used during winter construction in thaw stable	Ground freezing (frost packing) is a principal means of improving ground support for construction equipment. Project may, where necessary, use imported granular fill to construct a safe work pad and access within wetland areas.

TABLE 2.6-2

Requested Alternative Measures from the 2013 FERC Procedures for Construction and Operation of the Interdependent Facilities

Section No.	FERC Procedures (May 2013)	Alaska LNG's Proposed Measure	Justification
		permafrost and non-permafrost areas.	
VI.B.2.k	Remove all project-related material used to support equipment on the construction right-of-way upon completion of construction.	Remove all project-related material used to support equipment on the construction right-of-way upon completion of construction except where permanent fill is authorized by the USACE for jurisdictional wetlands.	Added provision to allow continued access by equipment needed for post-construction restoration over long-term restoration timeframes in arctic/sub-arctic regions. Material to support equipment is proposed to remain in place to prevent further disturbance, subject to COE authorization.
VI.B.3	Install sediment barriers (as defined in section IV.F.3.a of the Plan) immediately after initial disturbance of the wetland or adjacent upland.	Install sediment barriers as defined in section IV.F.3.a of the Alaska LNG Plan immediately after initial disturbance of the wetland or adjacent upland in summer or in winter prior to the spring snow melt.	Clarifies that temporary sediment barriers would be installed in advance of spring breakup and snowmelt. Refer also to the Winter & Permafrost Construction Plan.

3.0 PRE-CONSTRUCTION PLANNING

3.1 RIGHT-OF-WAY CONSTRUCTION MODES

ROW construction modes define the methods used to prepare the ROW for pipeline installation. The goal of each ROW mode is to prepare a flat space, which that is wide enough for the pipeline trench, trench spoil and a work area for stringing and welding the pipeline. Each mode was created to suit working in a particular season and type of terrain. Refer to Section 1.5.2.3.1.1.2 of Resource Report 1 for detailed descriptions of each ROW mode. The primary ROW Modes considered for the Project include:

- ROW Mode 1 – Ice Work Pads over permafrost in flat terrain with ample, permittable water sources such as those found on the ACP and portions of Minto Flats. (Winter)
- ROW Mode 2 – Frost Packed Work Pads over flat permafrost and over flat non-permafrost wetlands. (Winter)
- ROW Mode 3 – Matting for short, flat, isolated and saturated wetlands to provide a stable work surface. Mats will be limited to short segments because the cost to purchase, transport from the lower 48 states, and handle them is very high. (Summer)
- ROW Mode 4 – Granular Work Pads over thaw sensitive permafrost terrain, including those with wetlands, and over thaw stable soils with a thick organic layer to create a stable work surface. Summer pipeline construction with granular work pads is preferable to take advantage of temperate weather, more daylight, safer working conditions, increased productivity, and lower costs. (Winter or Summer)
- ROW Mode 5A – Conventional Grading cut and fill in thaw stable permafrost and non-permafrost terrain with cross slopes greater than 2%, including those with wetlands. (Winter or Summer)

Attachment A contains representative drawings for the ROW Modes listed above.

ROW mode selection depends on several variables including the health and safety of workers, construction season, geotechnical conditions, permafrost type, wetlands, topography, and the availability of fresh water. Because of the prevalence of permafrost in Alaska the first consideration in the logical progression of ROW mode selection is the presence of thaw sensitive permafrost. If the soil is thaw sensitive permafrost then resulting ROW modes are selected based on construction season, topography and availability of fresh water to minimize thermal impacts. If the soil is thaw stable permafrost or non-permafrost then resulting ROW modes are selected based on wetlands, construction season and topography. Refer to Section 1.5.2.3.1.1.3 of Resource Report 1 for detailed explanation as to how ROW modes were selected for the Project.

3.1.1 Right-of-Way Mode Considerations

Earlier Alaska pipeline projects have considered more extensive use of ice pads and a higher percentage of winter work for construction of pipelines as compared to the current Project. It was concluded these approaches were impracticable because:

- Construction of ice pads requires large quantities of fresh water which is only available in a few areas: along PTTL; ACP from MP 0 – 60 in Spread 1; and Minto Flats in Spread 3.
- Construction of ice pads is not feasible on sloping terrain because the water runs off the ROW.
- Working on icy slopes is not safe, especially for heavy tracked equipment.
- Using only ice pads would limit work to winters, which would cause an inefficient use of manpower and equipment.

- Ice road use on the ACP is only permitted for a maximum of approximately five months, depending on tundra permit issuance.

Typical summertime crossings of wetlands in the Lower 48 utilize hardwood timber mats to stabilize the ROW. This mode is feasible in the Lower 48 because wetlands are usually small in extent relative to the overall project length and hardwood mats are relatively easy to procure. Both of these points are not valid for the Project because:

- There are several hundred miles of wetlands on the Project, much of which is on sloping thaw sensitive permafrost terrain, and use of mats is not feasible or safe on sloping terrain.
- Hardwood timber is not available in Alaska and hardwood timber mats sourced in the Lower 48 would cost approximately $1100 each delivered to Anchorage or Fairbanks plus the cost of transporting them to remote sites.

Thaw sensitive permafrost presents a unique and challenging problem for any construction in Alaska. It is called thaw sensitive because disturbances to the surficial vegetation and soils can disrupt the thermal equilibrium which can lead to thawing. The Project contends some of the measures found in the FERC Procedures, relative to wetlands overlying permafrost soils and especially thaw sensitive soils, are technically infeasible and unsuitable due to local conditions. As prescribed the FERC wetland crossing Procedures would lead to rapid and significant degradation of the underlying permafrost and probable conversion of the wetland to a waterbody. This is evident from historical attempts to work directly on thaw sensitive permafrost in Alaska. Well established construction techniques for crossing permafrost terrain and the overlying wetlands have been developed in Alaska. One of the primary goals of this Plan's construction techniques is limiting thermal and erosional degradation of thaw sensitive permafrost, rather than mitigation of impacts to the overlying wetlands. Many of the established permafrost construction techniques developed in Alaska are utilized in this Plan. Some of the proposed construction techniques offer comparable level of wetland impact mitigation relative to the FERC Procedures, and some do not.

A few examples of where the FERC standard procedures are not feasible include:

- Placing and then removing mats during the summer on thaw sensitive permafrost wetlands would compress and damage the active layer leading to thermal degradation.
- Grading thaw sensitive permafrost by stripping organics and active layer soils will expose the ice-rich soils below. During summer the ice-rich soils will quickly melt and create unworkable muddy conditions for equipment and people. This leads to a significant change to surface heat gain from solar radiation. This is often an irreversible condition leading to further thawing of the permafrost over subsequent summers.
- Driving equipment on unprotected vegetation which overlays thaw sensitive permafrost, during the summer or winter, would damage the vegetation and would cause rutting and soil mixing. This leads to a significant change in surface heat gain from solar radiation. This is often an irreversible condition leading to further thawing of the permafrost over subsequent summers.
- Winter grading is not possible in thaw sensitive permafrost because the frozen tundra or vegetative mat and the underlying ice-rich soils are too hard to rip or grade with dozers. Drilling and shooting the grade or attempting use of asphalt trimmers would be slow and very expensive, and, after spring thawing, the entire ROW would become an impassable quagmire. This is often an irreversible condition leading to further thawing of the permafrost over subsequent summers.

3.2 CONSTRUCTION SEASONS

The construction season for any particular section is initially planned based on steepness of terrain, geotechnical conditions with particular attention given to non-permafrost wetlands, continuity of pipe lay to minimize spread moves, most efficient ROW construction mode, season length,

balancing total schedule between summer and winter to best use resources, ROW access, and other factors.

The selection of winter construction is biased toward flat wetlands, including non-permafrost swamps; flat thaw sensitive permafrost terrain suitable for ice work pads (ROW Mode 1); and flat wetlands suitable for frost packing (ROW Mode 2). In selecting the construction season, the presence of permafrost is secondary to terrain type and to linear sequencing of the work flow, as most permafrost terrain is amenable to construction in the summer as well. Trench wall stability in summer permafrost construction will require sequencing to minimize the duration of open ditch.

On the ACP, the terrain is almost level with abundant water resources available to enable construction of ice work pads and ice access roads. Frost-packed ROW is planned for flat terrain non-permafrost wetlands and flat terrain thaw stable permafrost such as in the Nenana River floodplains. Short sections of winter grading are also planned in gravelly floodplains and mass wasted rubble side hills of the Upper Atigun River, Chandalar Shelf, and the Upper Dietrich River because the depressed water table in winter will help in achieving a dry ditch.

In the most southerly spread where permafrost is absent, south of MP 630, summer grading (ROW Mode 5A) with some matting of wetlands (ROW Mode 3) and winter grading (ROW Mode 5A) of discontinuous uplands with frost packing (ROW Mode 2) of swampy wetlands are the primary ROW modes. Some saturated wetlands and swamp crossings in the southernmost spread must be performed in the winter. Some string bog crossings may require bridges or granular fill to provide access and support construction equipment.

Winter construction in thaw sensitive permafrost terrain reduces the possibility of thawed ditch wall instability by working at below freezing temperatures. However, winter season start and end dates limit the winter working period for ice work pads or frost packed ROW, and thus limit the length of winter pipe lay when using these ROW modes:

- Winter season start date: Use of heavy equipment on the tundra north of the Brooks Range is governed by the annual 'Tundra Permit' issued by the Alaska Department of Natural Resources (ADNR) and the United States Bureau of Land Management (BLM). Historically, Coastal Plain Tundra Permits may be issued as early as December 10 or as late as January 20. Foothills Tundra Permits typically are issued in late January, but in some years are not issued at all if the freeze depth and snow depth criteria are not met. Tundra permits are typically pulled in early May. The tundra permits allow low ground pressure (LGP) equipment to travel over the tundra to frost pack and construct ice roads. Heavy ice road construction equipment is allowed after a suitable base has been developed and may be used to complete construction of the ice road. Heavy equipment is only allowed to operate after ice roads are built. Thus, assuming a month to build enough ice road or work pad for pipeline construction, the earliest date pipe lay could begin is between January 15 and February 15 for the coastal plain and mid to late February for the Foothills. All pipe laid during this construction window would need to be completely tied in and backfilled by about May 1. This is a short season in the middle of the worst winter weather for pipeline construction. Hence, the project must utilize both summer and fall seasons in order to make enough progress in the year to complete installation in a timely and cost effective manner. It is not known how the BLM and ADNR will view the use of Tundra Permits south of the Brooks Range.
- To build on thaw sensitive permafrost in the summer months, a granular work pad is required because the terrain is not flat enough to use traditional hardwood mats and their cost in Alaska is extremely prohibitive.
- For non-regulated ROW access in wetland terrain, early winter cold temperatures are needed to start frost packing and ice work pad. Unseasonably warm temperatures would delay the start of winter ROW preparation, which would in turn delay start of pipe lay, thus shortening the winter season. If cold temperatures allow start of frost-packing in early November, pipe

stringing and welding could conceivably start on frost-packed ROW as early as one month later in early to mid-December, but maintaining the skilled workforce through the Christmas and New Year holidays would be a risk factor. Hence for construction planning, winter pipe lay is always assumed to begin in the latter half of January.

- Factors determining the start dates of winter construction are different for ROW preparation and pipe laying activities. ROW preparation using frost packing or ice work pads can only begin when low air temperatures freeze the ground surface deep enough to support the weight of equipment and permits are obtained from the regulatory agencies. On the North Slope, regulatory stipulations regarding snow cover and depth of freeze must be met. Pipe lay can only begin when there is enough prepared ROW in front of the pipe lay crews so they do not catch up to the ice work pad or frost pack construction crews.
- Winter season end date: Early spring solar gain and warming air temperatures may result in deterioration of the ice work pad or frost packed ROW sooner than planned, thus shortening the winter season. This deterioration could result in equipment breaking through and damaging the tundra, requiring additional restoration efforts. Regulatory agencies may not allow certain types of equipment on the ROW once the snow-ice work pad loses its integrity. While north of the Brooks Range end of winter is assumed to be May 1, south of the Brooks Range will generally be earlier, ranging from May 1 at Dietrich to April 15 at the Yukon River, and as early as April 1 south of Fairbanks.

The ADNR sets the start and end of season dates for work on tundra on State lands on the North Slope[1]. The ADNR 'off-tundra date' is determined by the strength and integrity of the overlying ice pad or work pad. Winter tundra travel on the North Slope is closed when it appears the snow has become too soft or too limited in extent to allow travel without damaging vegetation. Operators are then given 72 hours notice to move vehicles and other equipment off the tundra. Since the Project only plans to work on an ice work pad on the PTTL ROW and from MP 0 to MP 57 for the Mainline, the flat terrain should provide the same level of service as other North Slope ice roads.

In all cases, the winter ice work pad section lengths were planned to allow approximately four weeks between the completion of the pipe laying and the end of season dates, thus providing adequate time to complete pipeline backfill, tie-ins and ROW cleanup before deteriorating ice work pad conditions shut down the work. In sections using ice work pads (Mode 1) and frost packing (Mode 2), erosion control devices will be placed either at the end of the winter season before loss of ROW access or after breakup using hand labor and LGP equipment for access. Granular work pads (ROW Mode 4) are used to support heavy equipment so it does not directly impact the tundra or the underlying permafrost. Granular work pads must be thick enough to prevent rutting by equipment and rolling stock in the active layer beneath the work pad. While the trenching and backfill equipment always operate on the tundra or a thin granular overlay, they will impact the tundra and underlying permafrost and should only work the ditch line in any season. Restoration and placement of erosion control devices will be done after backfill to stabilize the backfilled ditch line and to meet FERC requirements.

[1] Unlike the approach by the State of Alaska, the Federal Bureau of Land management (BLM) currently relies on the operator to propose a winter tundra travel start date, based on field monitoring and an implementation plan. It requires the operator to install thermistors and weather monitoring stations and to conduct field tests prior to proposing a start date. BLM uses United States Geological Survey (USGS) meteorological and monitoring station data to verify that an operator's field measurements are accurate, and it monitors actual operations to ensure the implementation plan does not result in tundra damage (USGS 2014). In some cases BLM still uses the hammer slide penetrometer to gather site-specific frost depth data. BLM believes this new performance-based tundra travel program continues to protect the tundra while providing industry with more flexibility when to begin tundra travel (Walker 2011 pers. Com.).

3.3 CONSTRUCTION SPREAD DELINEATION

To reduce schedule duration and project cost, and to reduce demand for manpower and equipment, an emphasis was made to utilize summer and winter construction, with the plan to complete the work over a reasonable amount of time. After review of various scenarios, it was determined the optimum construction period was two years of pipe lay construction with four spreads; i.e., four seasons (two summers and two winters). Working in winter and summer will maximize utilization of personnel and equipment in the remote project location.

May 1 through September 30 is generally termed summer and October 1 through April 30 winter. However, April through May can also be referred to as the spring shoulder season and October through December as the fall shoulder season. Generally, May is a good month to begin summer construction but May, north of the Brooks Range, and April, south of the Brooks Range, are breakup months when rivers and streams begin flowing again. During this time, ROW conditions become sloppy, and productive on-ROW work is limited. Conversely, the fall shoulder months can be unseasonably warm some years or early winter in other years. The fall shoulder season can be used as an extension of the summer construction schedule for pipe lay. Even in cold years, the fall shoulder season is less severe than the dead of winter months, January through March, and thus a better time to schedule work.

In addition to two years of pipe lay, time is required for early works such as camp site and pipe storage yard preparation, camp construction, access road construction, ROW clearing, and granular work pad ROW construction. Early works will precede the first pipe lay by 18 to 24 months.

Each of the four spreads has different factors which influence division of winter and summer construction and their ROW modes. Sections of flat wetlands require a frozen ROW to support equipment and must be done in the winter. Sections of steep hills must be done in the summer. Many of the sections could be done in either season, particularly permafrost sections requiring granular work pads or non-permafrost terrain which can be graded.

In Spreads 1, 2, and 3, most terrain selected for winter construction can also be built in the summer if a granular work pad is constructed. Exceptions in Spread 3 would be some of the swampy terrain between Little Goldstream Creek and the Tanana River (MP 455 to 474) and in Spread 4 swampy string bog crossings between the Chulitna River and the Deshka River (MP 648 to 704). The swamp crossings might allow for short push sections in the summer if access on both sides is possible, however they are currently planned as winter construction. Spread 4 ROW modes are conventional grading and frost packing with no permafrost issues.

Areas of thaw stable soils, unfrozen soils, or difficult terrain are prioritized for summer work. Hills with longitudinal slopes steeper than 12%, even with permafrost soils, are selected for summer construction due to safety concerns for the operation of heavy equipment on steep hills in the winter and for snow avalanche hazards in mountainous sections. Also, slopes greater than 10% require graded ROW and/or granular work pad regardless of the construction season.

The total overall construction schedule of three and one half years consists of two and one half years build out of civil infrastructure to support the pipe lay. Pipe lay will be staggered with the two northern spreads working 4th Quarter 2021 through 4th Quarter 2023, and the two southern spreads working 4th Quarter 2022 through 4th Quarter 2024. The civil build out begins with material site and camp pad development in 2nd Quarter 2020 and completes with ROW work pad in the 3rd Quarter 2023.

Overall, approximately 53% of the pipe lay is scheduled for summer and 47% for winter.

Flexibility on the season of work based on actual construction progress and ROW mode is needed. For example, if Section 1A completes the 57-miles of planned pipeline ahead of schedule, there is no reason to stop laying pipe into Section 1B during late winter if crews are productive and the

ROW is in good shape. The same logic would apply to Section 1B continuing to productively lay pipe into Section 1C at the end of the summer season, even though the base plan calls for 1C to be laid in winter:

A detailed ROW mode table is included in this report as Attachment E-Mile by Mile ROW Mode & Wetland Distribution.

3.3.1 Spread 1

Spread 1 extends from MP 0 to MP 208.9 and consists of 115.0 miles winter construction (55.0%), and 93.9 miles summer construction (45.0%). Spread 1 is 100% continuous permafrost. Work will start at MP 0 and proceed from north to south. Winter work is planned for Sections 1A (56.6 miles), 1C (51.5 miles), 1D (2.4 miles), and 1G (4.4 miles).

Spread 1 ROW Modes are summarized below with a more detailed breakdown in Attachments B, C, and D:

Spread	ROW Mode	Mode	Mode Miles	Mode %	Wetland Miles	Wetland %
1	Ice Work Pad	1	56.57	27.1%	56.57	100.0%
	Frost Pack	2	0.75	0.4%	0.75	100.0%
	Mat	3	0.00	0.0%	0.00	0.0%
	Granular Work Pad	4	124.51	59.6%	119.36	95.9%
	Grade	5A	23.98	11.5%	0.00	0.0%
	Mountain Grade	5B	0.00	0.0%	0.00	0.0%
	Stream & Flood Plain	S&FP	3.07	1.5%	3.07	100.1%
1	**Total**		**208.88**	**100.0%**	**179.75**	**86.1%**

Section 1A, located on the ACP and classified as coastal tundra to about MP 22, is ideal for ice work pad ROW mode based on being 98% level for both cross slopes and longitudinal slopes and having ample water supplies and cold winters for ice pad construction. It is also 96% thaw sensitive permafrost with high ice content and is 96.3% wetlands, so an ice work pad will protect the tundra and underlying permafrost except on the ditch line. Section 1A is planned as the start of Spread 1 laying from MP 0 south.

Section 1B will be summer construction, following Section 1A. Section 1B is classified as Lower Foothills by ADNR for determining tundra travel dates. Section 1B is 100% permafrost, 85% thaw sensitive permafrost, and 95% wetlands, but does not have enough water sources in proximity nor flat enough, with only 58% level (<2% slope) terrain, to feasibly construct an ice work pad. Therefore, Section 1B requires a granular work pad for equipment and personnel safety while working on the tundra.

Section 1C (51.5 miles) will be winter construction following Section 1B. Section 1C is classified as Upper Foothills by ADNR for determining tundra travel dates. Section 1C is about 50% thaw sensitive permafrost and is 86% wetlands, but does not have enough water sources and is not flat enough for ice work pad with only 30% level. Therefore, Section 1C requires a granular work pad. The granular work pad is required for 65% of the section due to rolling thaw sensitive terrain. Frost packing and ice bridges are planned at stream crossings where topography and soils are suitable. About 6% is intermittent graded ROW in thaw stable gravels or bedrock between granular work pad segments.

Two other areas scheduled for the second winter, Section 1D (2.4 miles) and Section 1G (4.4 miles), are permafrost but are stable gravel floodplains in the upper Atigun and upper Dietrich Rivers. Late fall/winter construction was chosen for these areas to take advantage of a depressed water table resulting in a dry ditch. Conventional grading (Mode 5A) in these floodplains is planned including some river channels which will be completely frozen during construction. This work plan was proven effective by Alyeska Pipeline Service Company during the 1991-1992 Atigun Pipe Replacement Project.

Sections 1E, 1F, and 1H will be summer construction, following Sections 1C, 1D, and 1G. Section 1E is the short steep Atigun Pass segment, Section 1F is Chandalar Shelf segment, and Section 1H is the Upper Dietrich Valley segment. Sections 1E, 1F, and 1H are almost 100% permafrost, 25% thaw sensitive permafrost, and 57% wetlands. Terrain ranges from flat to steep with significant sidehill cuts required in thaw stable permafrost alternating with granular fill work pad over thaw sensitive permafrost.

Figure 2: Mainline Spread 1

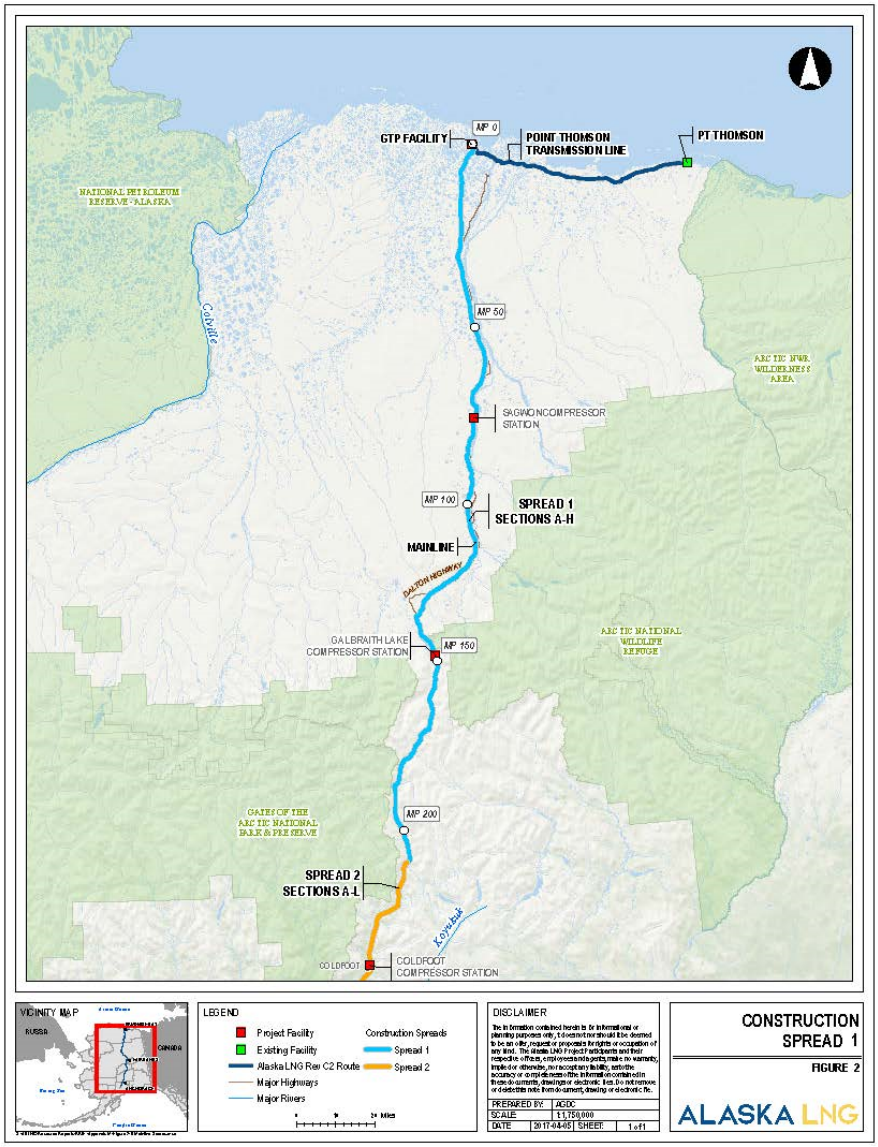

3.3.2 Spread 2

Spread 2 extends from MP 208.9 to MP 400.8 for a total of 191.9 miles, and consists of 56.3 miles of winter construction (29.3%), and 135.6 miles of summer construction (70.7%).

The terrain south of the Brooks Range to the Yukon River is continuous permafrost with about 50% thaw sensitive, but not as flat as the ACP of Spread 1 with only about 30% level, and lacks water sources for ice work pad construction. Although permafrost, the ice content is less than on the ACP and a significant portion of the Spread 2 ROW is in thaw stable soils or weathered bedrock. Winter sections in Spread 2 are selected based on flat or slightly rolling terrain and thaw sensitive soils which can be covered by a granular work pad.

Work will start at MP 209 and proceed from north to south. Winter work is planned for Sections 2A (20.0 miles), 2B (12.2 miles), and 2C (10.1 miles) in Winter 1, and in 2I (8.0 miles) and 2K (5.9 miles) in Winter 2. Certain steep terrain sections must be done in summer for safety reasons (Sections 2E, 2H, 2J, and 2L) and the remaining terrain mostly requires granular work pads due to thaw sensitive permafrost, most of the pipeline within Spread 2 can be built in summer and fall, leaving the most suitable short winter sections for the extremely cold winter months construction.

Spread 2 ROW Modes are summarized below with a more detailed breakdown in Attachments B, C, and D:

Spread	ROW Mode	Mode	Miles	%	Wetland Miles	Wetland %
2	Ice Work Pad	1	0.00	0.0%	0.00	0.0%
	Frost Pack	2	2.06	1.1%	2.06	100.0%
	Mat	3	0.01	0.0%	0.01	100.0%
	Granular Work Pad	4	139.56	73.0%	97.20	69.6%
	Grade	5A	46.28	24.2%	0.00	0.0%
	Mountain Grade	5B	0.40	0.2%	0.00	0.0%
	Stream & Flood Plain	S&FP	2.87	1.5%	2.87	100.0%
2	**TOTAL**		**191.18**	**100.0%**	**102.14**	**53.4%**

Sections 2A (20.0 miles), 2B (12.2 miles) and 2C (10.1 miles) are relatively flat with 14 miles or 40% level, but no long, continuous flat sections for ice work pads. While short flat stretches are considered for frost packing, 18 miles or 43% are thaw sensitive permafrost and susceptible to damage from tracked equipment. Therefore, most ROW (83% or 35 miles) is granular work pads with 2 miles of frost packing and 4 miles of intermittent grading in thaw stable segments.

Sections 2D through 2H are planned for the first summer, consisting of 96.6 miles of 98% permafrost of which 40 miles is thaw sensitive. Much of these sections are hilly with thaw stable south facing slopes and thaw sensitive north facing slopes. Slopes steeper than 10% total 16 miles, while flat terrain totals about 30 miles. The ROW mode is about 67% granular work pads and 33% graded.

Two sections are planned for the second winter, 2I (8.4 miles), and 2K (5.9 miles) with about 5 miles and 2 miles of level terrain respectively. There is the potential for massive ice and ditch instability as both sections are almost 100% thaw sensitive. Frost packing in these sections is not proposed even when level because of thaw instability, so granular work pads with ice work pads at flat stream crossings are planned for all 13.9 miles.

Figure 3: Mainline Spread 2

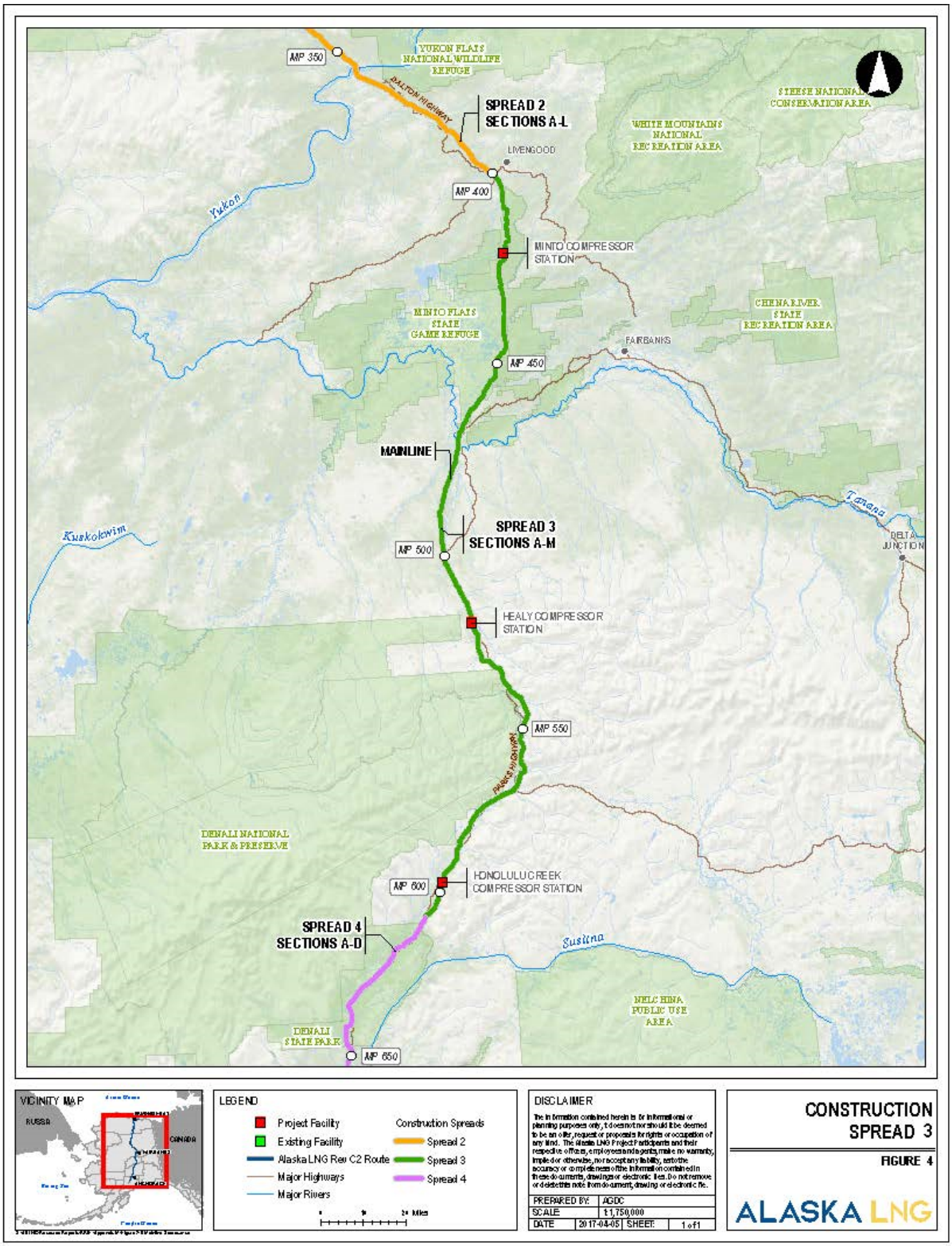

3.3.3 Spread 3

Spread 3 extends from MP 400.8 to MP 600.8 for total of 206.8 miles, and consists of 90.4 miles of winter construction (43.7%), 29.7 miles constructed in the fall shoulder season (14.4%), and 86.7 miles of summer construction (41.9%).

Spread 3 contains long winter construction sections with little or no access from the road system. Discontinuous permafrost exists for all of Spread 3. All the fall shoulder and winter work is on the northern end from Livengood to Healy and is characterized as 70% permafrost, 45% thaw sensitive, and 70% level. Winter ROW modes are 50 miles frost pack, 50 miles grade, and 20 miles granular pads. All the Spread 3 summer work is on the southern end (Healy to Hurricane Gulch), and is characterized as 60% permafrost, 3% thaw sensitive, 40% level. Summer ROW modes are 79 miles grade, and 7 miles granular pads and has significant steep and sidehill terrain south of Healy including Sections 3I, 3J, and 3K (Denali Park 'Glitter Gulch').

Spread 3 ROW Modes are summarized below with a more detailed breakdown in Attachments B, C, and D:

Spread	ROW Mode	Mode	Miles	%	Wetland Miles	Wetland %
3	Ice Work Pad	1	0.00	0.0%	0.00	0.0%
	Frost Pack	2	49.28	24.9%	49.28	100.0%
	Mat	3	0.20	0.1%	0.20	100.0%
	Granular Work Pad	4	27.14	13.7%	18.34	67.6%
	Grade	5A	117.04	59.2%	0.00	0.0%
	Mountain Grade	5B	0.94	0.5%	0.00	0.0%
	Stream & Flood Plain	S&FP	2.95	1.5%	2.95	100.0%
3	**TOTAL**		**197.55**	**100.0%**	**70.77**	**35.8%**

For Sections 3A, 3B and 3C in Minto Flats (MP 401 – 473) and Sections 3D, 3E, 3F, and 3G from the Tanana River to Rex (MP 473 – 489) frost packing flat wetlands and grading uplands are the primary ROW modes. Section 3A requires a 30-foot wide granular travel lane along the working side of the ROW for primary access and movement of pipe and personnel from the highway at Livengood to the access road on the ridge in Section 3B. Section 3B is on the ridge above the flats and a permanent all season access road along the ROW is required for access to a compressor station. The access road and the pipeline ROW for Section 3B will be cleared and graded the summer before the season of pipe lay. Section 3C requires an ice road travel lane from Washington Creek south where the ROW is in the flats and cannot be graded. These travel lanes are critical because access to the ROW is only available at Livengood (MP 401), Murphy Dome/Chatanika (MP 439), Dunbar (MP 453), Nenana (MP 459), and Rex (MP 484). The distances between these access points requiring an ice or granular road are 8, 14, 7, and 26 miles, respectively.

The relatively flat wetland terrain and availability of water from lakes suggest an ice road north of the Tanana River is practical. Water south of the Tanana River may be available from the City of Nenana. The first fall shoulder season and winter (W1) includes Sections 3A (8.1 miles), 3B (21.6 miles) south of Livengood, and 3C (43.2 miles) from Washington Creek to the Tanana River. Sections 3A and 3C comprise the north and south ends of the Minto Flats, a stretch of ROW with predominately flat wetlands overlaying discontinuous permafrost which will be frost packed with some grading along the foothills. Section 3B (21.6 miles) traverses a ridgeline on the hills east of Minto Flats and could be constructed in summer, but is planned for fall and early winter to provide

linear continuity in construction from Livengood to the Tanana River. Although Section 3B is on uplands, it is gently rolling with only one steep hill on the north end which will be constructed in the fall. The second winter includes Sections 3D (0.5 miles) for an HDD access and 3E (15.6 miles) from the Tanana River to the south side of the Nenana #2 crossing, 3F (9.2 miles) completes the route to Rex, and Section 3G (22.2 miles) from Rex to the north side of Healy. Sections 3D, 3E, 3F, and 3G are flat wetlands underlain by discontinuous, thaw stable granular material interspersed with small bogs along the Nenana River floodplain.

Summer work section in Spread 3 begins in Section 3H north of Healy at MP 521 and continues to south of the Jack River crossing near Cantwell. The first summer traverses pinch points along the highway in Sections 3I and 3L1, plus steep and inaccessible terrain in Sections 3J and 3K from MP 535 (Hornet Creek) to MP 543 (Yanert Fork). The 'Glitter Gulch' Section 3I follows the Parks Highway from the Moody Bridge to just north of the Denali Park tourist community. Work along the highway is scheduled for fall and early winter after the tourist season, which generally ends on Labor Day. Section 3L1 crosses the Nenana River and the Denali Fault at MP 561 and includes a remote section over Reindeer Mountain from MP 561 to 566. The segments of mountainous terrain and limited access from the road system are not constructible in winter due to safety issues related to terrain and access. The second summer encompasses Section 3L2 through Broad Pass from the Jack River to south of the Middle Fork Chulitna River Crossing at MP 586.3, then traverses a remote segment up the mountain side with perched string bogs to south of Hurricane Gulch, rejoining the Parks Highway at MP 607.5 after crossing into Spread 4 at MP 600.8.

Figure 4: Mainline Spread 3

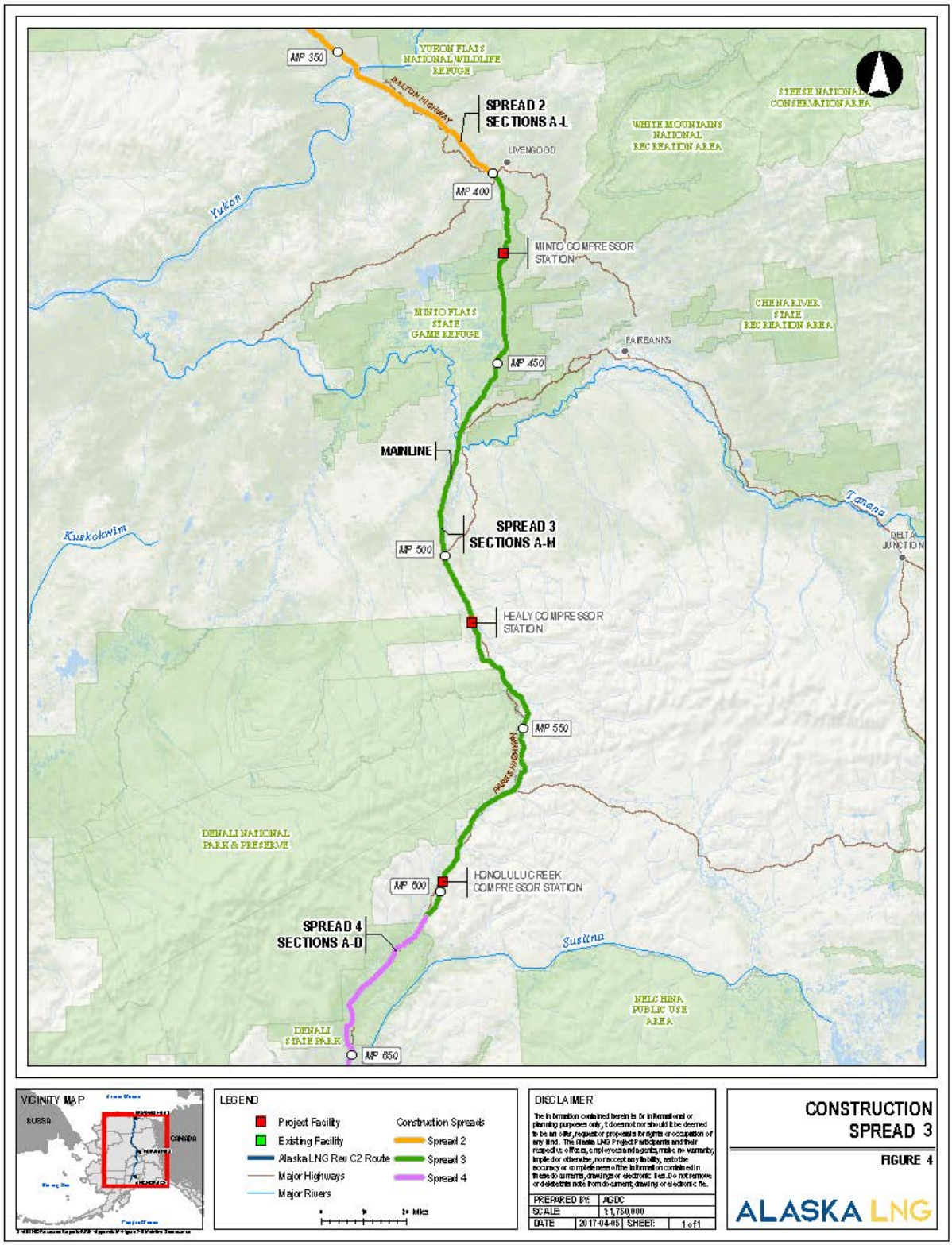

3.3.4 Spread 4

Spread 4 extends from MP 600.8 to MP 806.7 for a total of 172.1 miles, consisting of 75.0 miles of winter construction (43.6%), and 97.1 miles of summer construction (56.4%).

Spread 4 is characterized as 1% permafrost, 1% thaw sensitive, and 65% level. It contains long winter (Section 3C is 37 miles) and summer (Section 3D is 25 miles) construction sections with little or no access from the road system.

The two winter work sections begin south of Trapper Creek at MP 704.0 and extend to south of the Yentna River at MP 741, a total of 75 miles. Winter ROW modes are 18 miles frost pack, 56 miles grade, and 1 mile granular pads.

Summer work consists of 58.5 miles on the north end from Hurricane to the Chulitna River, this remote segment includes several challenging crossings of deeply entrenched streams including Antimony Creek, Little Honolulu Creek, Honolulu Creek, and Hurricane Gulch., 25 miles from Alexander Creek to Beluga, and 13 miles on the Kenai Peninsula terminating at the LNG Plant and is characterized as 6% permafrost, 0% thaw sensitive, 33% level. Summer ROW modes are 96 miles grade, and less than two miles of mats and granular pads. There is 14 miles of steep sidehill terrain most of which is between Hurricane Gulch and the Chulitna River.

Spread 4 ROW Modes are summarized below with a more detailed breakdown in Attachments B, C, and D:

Spread	ROW Mode	Mode	Miles	%	Wetland Miles	Wetland %
4	Ice Work Pad	1	0.00	0.0%	0.00	0.0%
	Frost Pack	2	17.35	10.1%	17.35	100.0%
	Mat	3	0.30	0.2%	0.30	100.0%
	Granular Work Pad	4	1.27	0.7%	1.27	100.0%
	Grade	5A	150.91	87.7%	7.47	5.0%
	Mountain Grade	5B	0.00	0.0%	0.00	0.0%
	Stream & Flood Plain	S&FP	2.31	1.3%	2.31	100.0%
4	**TOTAL**		**172.12**	**100.0%**	**28.69**	**16.7%**

In Spread 4, from the community of Trapper Creek (MP 666) to twenty miles south of the Yentna River crossing (MP 741), winter construction is planned for Sections 4B (38.0 miles) and 4C (37.0 miles). It was assumed the only factor governing when frost packing could start was the air temperature in early November. The predominant ROW modes in Spread 4 winter sections are grading and frost packing. The frost packing is for flat wetlands and short swamp crossings and would be combined with conventional grading of the upland strands between wetlands. In addition to ROW preparation, a 30-foot wide granular access road along the working side of the ROW must be built for movement of pipe and personnel south of Trapper Creek for about 20 miles. This travel lane is critical because access to the ROW is only available from the road system near Trapper Creek. South of the Yentna River, access is possible only along the ROW from Beluga Landing except for a local road system at some distance from the ROW between Beluga Landing and the Lewis River.

Figure 5: Mainline Spread 4

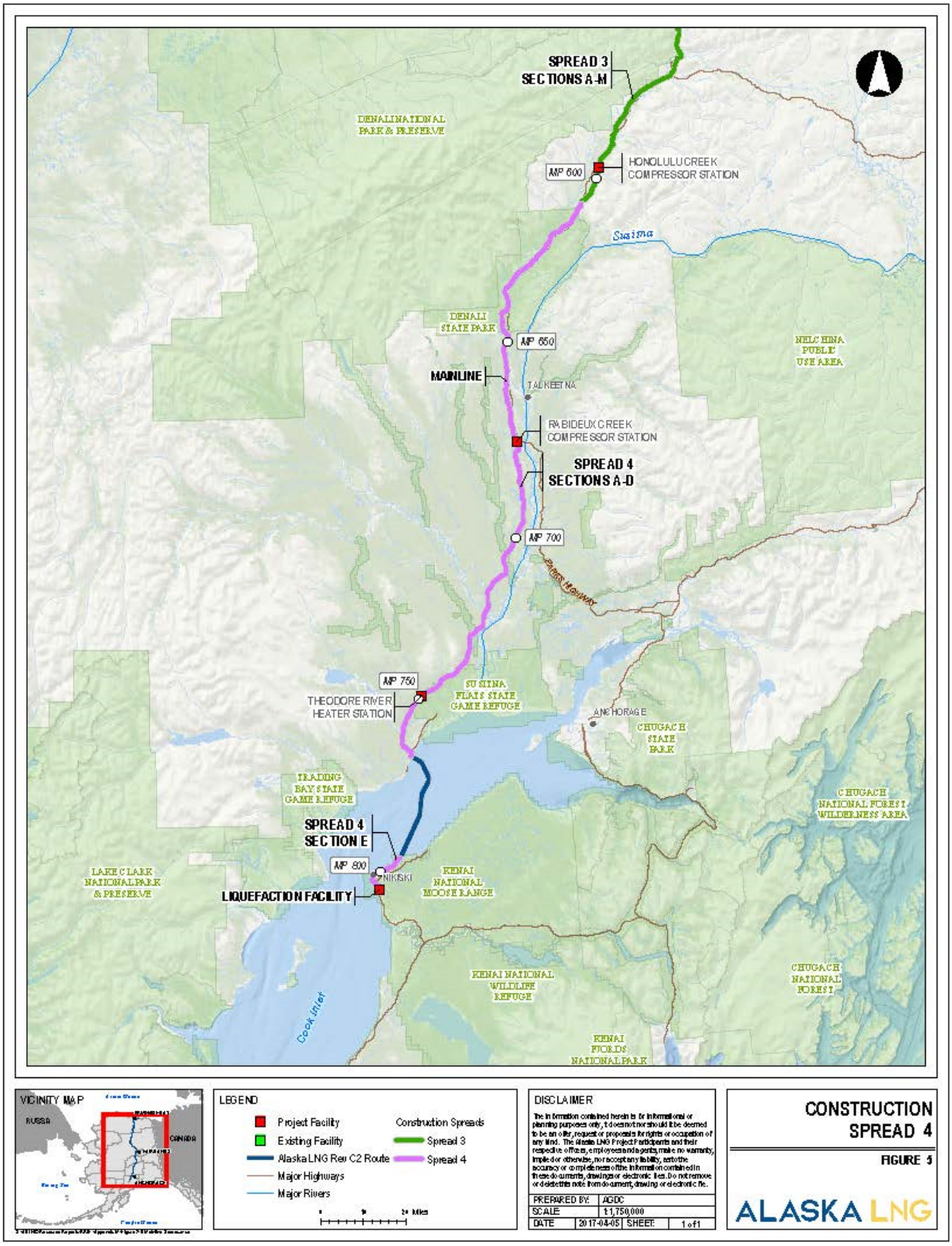

3.3.5 Travel and Bypass Lanes

Much of the pipeline route is parallel to and reasonably close to existing primary highways but a few long sections are remote and require special access to and along the ROW.

In Spreads 1 and 2, the Dalton Highway parallels the pipeline route from MP 0 (Prudhoe Bay) to MP 401 (Livengood), and for most of this length the ROW is accessed easily and frequently with short access roads. However, there are several segments where the distance between intersects with the road system is five to twenty miles. For segments greater than five miles, the ROW has been widened to include a travel lane for primary rolling stock including pipe haulers and personnel carriers.

Section 1A requires ice travel and bypass lanes for its entire distance due to no access from the highway from MP 0 to MP 25, then for the convenience of keeping most traffic off the highway and on the ROW from MP 25 to MP 57. The three other locations requiring travel lanes are segments where there is no access from the highway for more than five miles.

Spread 2 contains two segments remote from the highway with no access except from either end. The first is at the north end of the spread in 2A from MP 223.47 to 228.09. Because this is a remote segment across the river from the highway, and has very steep sidehill, travel lanes are planned for a short distance from each end, but the terrain is too steep to connect the two ends. The second location is near the southern end of the spread in 2L in a very hilly section isolated on the east side of the TAPS pipeline:

In Spreads 3 and 4, the Parks Highway parallels the pipeline route from MP 470 (Nenana) to MP 674 (Trapper Creek), and for most of this length the ROW is accessed easily and frequently with short access roads. However, there are several segments where the distance between intersects with the road system is greater than 15 miles, including MP 401 (Livengood) to MP 470 (Nenana) and MP 474 (Nenana) to MP 489 (Rex). From MP 674 (Trapper Creek) south to MP 766 (Beluga) there is no access to any primary road system. For segments greater than five miles, the ROW has been widened to include a travel lane for primary rolling stock including pipe haulers and personnel carriers.

Spread 3 contains five segments requiring a special access road or travel and/or bypass lanes including almost 100 continuous miles south of Livengood from MP 401.2 to 498.6. Section 3A traverses wetlands in Minto Flats where the ROW must also serve as access up to the start of Section 3B on the ridge. Section 3B requires an access road parallel to the ROW to a Compressor Station, so is permanent and not technically a travel lane. Most of Section 3C is in the southern Minto Flats, scheduled for winter, and must provide travel lanes for movement of pipe and personnel from MP 430.48 to 464.36. From there to the Tanana River, no travel lane is needed but a bypass lane is required due to direction of lay. South of the Tanana River in Section 3E there is no access from the Tanana River to Rex or MP 473.78 to 489.38. In Section 3F, MP 489.38 to 498.58, one-way access along the ROW requires a travel lane. Finally, in Section 3K a remote segment north of the Yanert Fork crossing with one-way access from the south end requires a travel lane from MP 538.87 to 543.08.

Spread 4 contains five segments requiring a special access road or travel lanes including 71 continuous miles south of Trapper Creek from MP 674.05 to 745.00. Section 4A contains a six mile one-way access to the south side of the Chulitna River crossing requiring a travel lane. The remaining 71 miles is in Sections 4B and 4C. Section 4B requires a permanent all season access road along the ROW from MP 674.05 to 703.80, the location of Susitna Camp. From there south in Section 4C, one-way access to Sleeping Lady Camp at MP 745.00 requires a travel lane on the ROW:

The travel lane (20 feet) would be located on the outside of the primary work area, and would be required for safe and efficient movement of pipe haulers, personnel, inspection staff, and other

construction support vehicles in remote sections of the ROW which lack closely spaced access roads (i.e. more than 5 miles apart). The lane would also be used for emergency vehicles. The travel lane must remain unobstructed to allow traffic to pass working crews and move along the ROW in a timely manner.

In addition, a bypass lane (15 feet) would be located on the outside of the spoil area. Bypass lanes are required when access to the ROW is from the spoil side to allow equipment and personnel movement and access to the working side at pipe string breaks. They are also used for allowing excavators and trenchers to bypass each other while working.

Planned travel and bypass lanes are summarized by spread in the tables below. In a few cases, an all-season access road is required along remote sections that are not otherwise accessible from the road system.

A summary level table of all spreads is provide to give an overview of the total travel and bypass lane scope, plus sections where an all season access road parallel to the ROW is required.

Spread 1									
Spread	**Section**	**From MP**	**To MP**	**ROW Miles**	**Travel Lane**	**Bypass Lane**	**Access Road on Travel Lane**	**Optimized Season of Pipe Lay**	**Comments**
1	A	0.00	56.63	56.63	**Yes**	**Yes**		W1	Ice Pad ROW with traditional full width including travel lanes and bypass lane for the entire distance. No impact to natural vegetation - protected by temporary ice pad. Bypass lane needed for access to trenching crews because pipe is laid before ditching.
1	B	56.63	63.33	6.70	**Yes**	No		S1.5	ROW is away from Dalton for entire 7-mile distance.
1	B	94.31	109.65	15.34	**Yes**	No		S1.5	ROW is trapped behind TAPS Above Ground pipeline for over 15 miles with no access. The travel lane needs to continue all the way south to where Access Road AR-N-109.9 comes in to the ROW.
1	C	129.58	136.52	6.94	**Yes**	No		W2	Remote area with no access; trapped by TAPS Above Ground pipeline; Kuparuk River crossing in middle and hilly terrain.

Spread 2									
Spread	**Section**	**From MP**	**To MP**	**ROW Miles**	**Travel Lane**	**Bypass Lane**	**Access Road on Travel Lane**	**Optimized Season of Pipe Lay**	**Comments**
2	A	223.47	224.27	0.80	**Yes**	No		W1	Travel lane provides access to north end of isolated portion of very steep sidehill where ROW may be narrowed in places and not passable to normal construction traffic.
2	A	227.71	228.09	0.38	**Yes**	No		W1	Travel lane provides access to south end isolated portion of very steep sidehill where ROW may be narrowed in places and not passable to normal construction traffic.
2	L	389.00	393.95	4.95	**Yes**	No		S2.5	Extremely isolated - some steep hills - travel lane is needed to access south end of isolated area at Erickson Creek. Travel lane begins at MP 393.95 and goes north to MP 389.0 at the top of steep hill on south side of Erickson Creek #2 MP 387.9 crossing. The bottom land at Erickson Creek is isolated by steep hills to the north and south - especially the shoo fly at MP 385 down to Erickson Creek #1 MP 385.7.

Spread 3									
Spread	**Section**	**From MP**	**To MP**	**ROW Miles**	**Travel Lane**	**Bypass Lane**	**Access Road on Travel Lane**	**Optimized Season of Pipe Lay**	**Comments**
3	A	401.20	408.10	6.90	**Yes**	**Yes**	**Yes**	W1	Winter construction -bypass is needed because likely ditched after pipe lay; travel lanes needed for access to Ridge Section 3B from Livengood Camp and due to 40 mile winter work to the Chatanika River. Should start at the access road coming from the PSY & Camp; not from the road crossing. This is where the shoofly starts and where the travel lane should end.
3	B	408.10	421.51	13.41	No	No	**Yes**	W1	A permanent access road will be parallel to ROW to Minto Flats Compressor Station. No need for travel lane.
3	C	430.48	464.36	33.88	**Yes**	**Yes**		W1	Winter construction -bypass is needed because likely ditched after pipe lay; travel lanes needed for access to Chatanika River crossing.
3	C	464.36	470.70	6.34	No	**Yes**		W1	Access is OK along the ROW and from each end and Tanana River. Bypass lane needed because spoil side is east of ROW blocking access roads at MP 464.37, MP 466.91, and MP 470.73.
3	E	473.78	489.38	15.60	**Yes**	**Yes**		W2	Travel lane needed because ROW is the only access to Nenana #2 river crossing; Section includes a 13-mile long section with no other access than the ROW with a river crossing at each end; Bypass needed because may be ditched after pipe lay in winter.
3	F	489.38	498.58	9.20	**Yes**	No		W2	ROW is only access (one way & dead end) from Rex to Nenana #2 river crossing;
3	K	538.87	543.08	4.21	**Yes**	No		S1.5	Travel Lane needed to access staging area at Montana Creek and MLBV 35.

Spread 4									
Spread	**Section**	**From MP**	**To MP**	**ROW Miles**	**Travel Lane**	**Bypass Lane**	**Access Road on Travel Lane**	**Optimized Season of Pipe Lay**	**Comments**
4	A	642.28	648.28	6.00	**Yes**	No		S1.5	One way access to west side of Chulitna River crossing.
4	B	674.05	693.94	19.89	No	No	**Yes**	W1	Two Lane Road from Parks Highway to Susitna Camp.
4	B	693.94	703.80	9.86	No	No	**Yes**	W2	Two Lane Road from Parks Highway to Susitna Camp and Deshka CS beyond at MP 703.8; whenever possible adjacent to ROW or parallels ROW. Ends at the Deshka CS MLBV 46.
4	C	703.80	721.23	17.43	**Yes**	No		W2	ROW is only way from Susitna Camp to Yentna River (MP 721.23) and Yentna to Sleeping Lady Camp (MP 745.00).
4	C	721.23	745.00	23.77	**Yes**	No		S2.5	One Way from Yentna River to Sleeping Lady Camp at MP 745.0. There is no other access to move equipment or access the south side of Yentna from Sleeping Lady camp. Don't need travel lane south of Sleeping Lady Camp.

Summary							
Spread	**Section**	**From MP**	**To MP**	**Total Limited Access (miles)**	**Travel Lane (miles)**	**Bypass Lane (miles)**	**Access Road on Travel Lane (miles)**
1	A	0.00	56.63	56.63	56.63	56.63	
1	B	56.63	63.33	6.70	6.70		
1	B	94.31	109.65	15.34	15.34		
1	C	129.58	136.52	6.94	6.94		
2	A	223.47	224.27	0.80	0.80		
2	A	227.71	228.09	0.38	0.38		
2	L	389.00	393.95	4.95	4.95		
3	A	401.20	408.10	6.90	6.90	6.90	6.90
3	B	408.10	421.51	13.41			13.41
3	C	430.48	464.36	33.88	33.88	33.88	
3	C	464.36	470.70	6.34		6.34	
3	E	473.78	489.38	15.60	15.60	15.60	
3	F	489.38	498.58	9.20	9.20		
3	K	538.87	543.08	4.21	4.21		
4	A	642.28	648.28	6.00	6.00		
4	B	674.05	693.94	19.89			19.89
4	B	693.94	703.80	9.86			9.86
4	C	703.80	721.23	17.43	17.43		
4	C	721.23	745.00	23.77	23.77		
TOTALS				**258.23**	**208.73**	**119.35**	**50.06**

4.0 WINTER CONSTRUCTION PROCEDURES

4.1 RIGHT-OF WAY PREPARATION - WINTER

Preparing the ROW for Mainline and PTTL construction during winter may consist of frost packing, ice work pad construction, granular work pad construction, plus any grading required between granular work pad sections. Depending on the ROW Mode selected, the following activities may take place.

4.1.1 Ice Work Pads (Winter)

The process begins by allowing a prescribed depth of frost and snow to develop on the tundra. Once the resource agencies (BLM and ADNR) open the ACP to off road or “tundra travel”, construction of the ice work pad is then accomplished by combining snow with water and sometimes ice chips to a specified depth and width.

Suitably constructed ice work pad can support heavy loads and pipeline construction equipment without damage to the underlying vegetation. This ROW mode intentionally avoids stripping of organics outside of the trench line to minimize disturbance of the organic soil layer which provides a protective thermal layer to the underlying permafrost.

The ditch line is covered by the ice work pad and no other preparation is required. For continuous chain trenching, the trencher will dig in one pass through the ice work pad, tundra, and to full depth in the mineral soil. Topsoil salvaging within the trench line for this ROW mode is impracticable. Trenchers can "strip" a minimum of about 2 to 3 feet which results in mixing of organics with snow/ice and mineral soil. Such a mixture would provide little to no benefit to revegetation efforts because trenching would grind up the roots and rhizomes of arctic tundra plants making it difficult for them to re-establish on the trench backfill.

Where ditch is to be opened by “Drill & Shoot”; drills mounted on excavator chassis will operate on the ice work pad and drill blast holes through the work pad, tundra, and to depth in the mineral soil. Again, no organics segregation is possible before or after drilling.

In the spring, resource agencies will monitor weather and tundra conditions and will issue a notice closing tundra travel to unapproved equipment. Prior to the tundra travel closing date, the ditch spoil will be placed back into the ditch and ‘roached’ to allow for future thaw settlement. Erosion and sediment control devices (ECD) will be deployed along the ditch line to control surface drainage.

Winter ice work pads are planned to be built the same season as the pipeline is installed in the trench.

4.1.2 Frost Packed Pads (Winter)

Frost packing may be used on flatter terrain with soils which may not have the strength to support construction equipment without rutting or soil mixing. These locations could have either upland or wetland vegetation. This ROW mode helps reduce impacts to these resources by maintaining plant root structure and associated surficial organic soils in place. The technique exposes the ground surface to the cold by snow removal, and compacts any snow and the surface vegetation by continued passes with LGP equipment which promotes frost penetration. Frost packing is generally limited to flatter terrain because of safety concerns with operating heavy equipment on frozen, sloping ground.

Frost packing is most suitable on flat terrain underlain by saturated non-permafrost soils or thaw stable permafrost soils overlain by a saturated vegetative mat. Conversely it may not be suitable

for fine-grained thaw sensitive permafrost soils where construction disturbance of the surface vegetation by tracked equipment could cause thermal degradation of the underlying permafrost in summer. Thus, in fine-grained thaw sensitive permafrost soils, the snow cover will be used and supplemented with any available water sources to create a packed or hardened snow travel surface above the vegetation. The frost packed ROW also reduces rutting and mixing of the surface organics and sub-soils.

Topsoil salvaging within the trench line for this ROW mode is impracticable. Trenchers can "strip" a minimum of about 2 to 3 feet which results in mixing of organics with snow/ice and mineral soil. Such a mixture would provide little to no benefit to revegetation efforts because trenching would grind up the roots and rhizomes of arctic tundra plants making it difficult for them to re-establish on the trench backfill. Also, backhoe excavators (commonly used for ditching with this ROW mode) would not be able to properly separate frozen organics from the mineral soil underneath.

4.1.3 Granular Work Pads over Permafrost Terrain (Winter or Summer)

Granular Work Pads will be used for flat or sloping terrain underlain by fine-grained thaw sensitive permafrost or by thaw stable permafrost with a thick organic mat. This type of thaw sensitive terrain is prevalent in Spreads 1 and 2, with some thaw stable thick organic mat terrain in Spread 3. The granular pad thickness, in addition to the depth of fill required to provide a level work pad, is 12 to 36 inches, depending on the permafrost thaw-susceptability.

Granular work pads provide structural support for wheeled and tracked equipment to travel over permafrost terrain in summer or winter while preserving the tundra or vegetative mat beneath the granular work pad, thus providing mechanical protection between equipment and the underlying permafrost. The granular work pad provides a level working surface possessing the required traction for safely operating construction equipment in flat or hilly terrain. Geotextile materials might be placed under the working side fill if geotechnical analysis indicates the need. Otherwise, no separator will be placed between the working side fill and vegetation. Granular pad thickness over the ditch line may be thinner than the working side to provide a level surface for excavators or trenchers. No granular pad is placed in the spoil area.

In an effort to minimize overall impacts to wetlands and the underlying thaw sensitive permafrost, the Project plans to place ditch spoil on the native vegetative mat and to remove it with excavators during backfill. During winter, a layer of snow may separate ditch spoil from the frozen vegetative mat. During backfilling operations spoil material will be moved back to the trench and the backhoe operator technique will minimize disturbance to the vegetative mat.

Stripping of surface organics will not occur on this ROW mode as the trench will be covered with granular material before trenching to provide a level working surface for excavation equipment. Granular material from the working side of the work pad will be spread over the trench area after backfill and during site cleanup and restoration.

After the pipeline is lowered-in and the trench backfilled, the thicker section of granular work pad material may be spread from the working side across the trench to provide a uniform cover over the surface. This will aid in long-term restoration.

4.1.4 Conventional Grading (may be used in winter or summer)

Conventional grading will be used for level or sloping terrain underlain by thaw stable permafrost and non-permafrost soils. This ROW mode is typical for non-arctic regions but will be used in all spreads where these soils conditions are found, unless the organic mat is too thick to support equipment. In those cases, frost packing or a thin structural granular work pad (approximately 12 to 24 inches thick) will be considered.

Conventional grading may be used in winter and summer seasons, and across uplands and non-saturated wetlands that are generally dry and stable. When used in flat thaw stable permafrost or non-permafrost wetlands during the summer, thin surface organics will be stripped across the full ROW and stockpiled to the sides of the ROW. When used in sloping wetlands during the summer, thin surface organics will be stripped from the trench and spoil area only and stockpiled upslope. However, surface organics will not be stripped during winter.

Grading of side slope areas in thaw stable permafrost or bedrock will require drill and shoot techniques in summer or winter if the ground is not rippable. Most permafrost is considered non-rippable.

Cleanup and grading activities will bring any ROW cuts and fills to stable angles of repose and restore existing drainage patterns. Once reinstatement of graded ROW is complete, any stripped surface organics will be spread across the ROW and erosion and sediment controls deployed.

4.1.5 Aboveground Installation on the North Slope

Construction of the PTTL is different from the Mainline, because it will be installed on aboveground supports for most of its length, except for a few waterbody crossings. Standard industry practice on the ACP is to construct aboveground pipelines and support systems from ice roads and ice work pads to preserve permafrost by minimizing impact to the tundra and the surrounding habitat. The PTTL will require a heavy haul ice road parallel to the ROW from the eastern edge of the Prudhoe Field to Pt. Thomson (48 miles).

The ice work pad construction along the pipeline ROW with its associated installation of ice access roads, ice access ramps, and ice equipment turnaround pads, will be simultaneous with the heavy haul ice road and will follow closely behind the survey staking. Water for ice road, ramps, and pads will be drawn from designated and permitted water sources near the pipeline alignment. Ice ramps and turnouts will be located so as to provide multiple access points to the ROW to reduce traffic, improve safety, and minimize congestion along the construction corridor.

Other than breaching waterways covered by ice roads and pads, no restoration is typically required for aboveground pipeline construction. Appropriate erosion and sediment controls will be deployed for all river bank transitions where the pipeline will be buried.

4.2 RIGHT-OF WAY MAINTENANCE, SNOW HANDLING, AND REMOVAL

Continuous maintenance of the ROW and access roads with motor graders will be provided to ensure trafficabiliity for stringing tractors and other rubber tired vehicles. Repairing ice work pads with water and ice chips will be part of this effort. Monitoring of drainage structures such as culverts will be required to control ice dams caused by aufeis or spring thaw/freeze cycles.

On all ROW surfaces, removing snow from the ROW will be an ongoing consideration throughout the winter construction seasons. On the North Slope, drifting snow due to the near constant wind will require snow management. Major blows or ground blizzards can last more than one day and it will be critical to clear the work area of snow and re-start all the crews. Drifting snow will occur in the wind shadow of construction equipment parked at night and will also accumulate on the leeward side of the ditch spoil pile and will accumulate in open ditch. Regular passes by snow blowers during the working shift or at night is the most effective way to clear the snow and get it off the ROW. However, large drifting caused by blows will require bulldozers in addition to snow blowers feathering the drifted snow off each side of the ROW to avoid snow pileup. Groomers will be used to level out any uneven snow surfaces to reduce future drifting.

The area needed for moving and grooming snow off the ROW is about 100-feet on either side of the ROW and is not considered Additional Temporary Work Space (ATWS). Workspaces for snow storage would not be cleared or graded. The placement of stockpiled snow will ensure snow melt

will not cause erosion and sediment loss. The stockpiled snow piles will include gaps to allow water to drain off ROW during spring thaw and to allow for wildlife access around the piles.

4.3 ACCESS ROAD CONSTRUCTION AND MAINTENANCE

Permanent access roads will be required for a number of pipeline facilities and will be designed to reduce surface drainage impacts and for ease of future pipeline and facility maintenance. Permanent access roads will be constructed of imported granular materials from approved borrow sources called materials sites. Design thickness of roadway embankments will be based on requirements to support heavy equipment loads and pipe movement. Road embankments will be elevated above natural grade and designed with drainage structures to shed cross-drainage of the surrounding terrain, and approved structures for crossing any waterbodies.

Temporary ROW access roads will be required at many locations for construction and restoration purposes only but will not be required for pipeline operations. Temporary access roads may be constructed to similar standards as permanent access roads described above, and most will remain in service until after ROW restoration. After restoration, access road drainage culverts at highway turnouts will be removed, cutting off future use of these temporary access roads, however the granular fill will be left in place. Any temporary bridges across water bodies will also be removed.

Temporary winter-only access roads to ice work pad or frost packed ROW may be constructed using water and ice to reduce cost and environmental impact. Ice roads and frost packed roads will be constructed over clear cut ground cover. Construction will be accomplished during frozen conditions to make environmentally sensitive areas less susceptible to damage.

Any required bridge installation and removal will take into account high water levels during the spring melt. There are two options for frozen conditions: remove the bridge prior to the onset of thawing conditions or install the bridge to a height which will not impede spring run-off. Ice and snow bridges will be breached and structural bridging materials will be removed prior to the spring breakup. The use of existing access roads may require installation of larger radius turn zones and the mitigation of steep slopes to accommodate construction equipment such as stringing trucks. This will be required at turn-offs for safe negotiation with long loads and must provide sufficient line of sight in each direction from the turn off to provide adequate sight distance for other traffic. Also, existing arterial roads may require widening at turn-offs with the addition of passing lanes to provide for safe movement of normal highway traffic.

4.4 OTHER PIPELINE CONSTRUCTION ACTIVITIES

The following activities will also be undertaken as part of the winter pipeline construction process.

4.4.1 Ditching

Trench mode is the primary pipeline operation influenced by seasonal and permafrost considerations. Much of the ACP permafrost planned for winter construction consists of marine or upland silts, loess, and till, and is considered to be trenchable with continuous chain trenchers. Chain trenchers allow for trenching behind the pipe lay, which is advantageous in winter to minimize open ditch duration. Chain trenchers are also expected to be productive in weathered bedrock terrain in hilly sections between Prospect Creek and Livengood planned for summer construction and in warm permafrost south of Livengood planned for winter construction. However, much terrain from MP 100 to MP 350 is expected to contain cobbles and boulders, which when frozen, may require drill and shoot followed by backhoe excavation. Also, most of the non-permafrost terrain south of the Tanana River (MP 474) will be conventionally backhoe ditched without blasting. Pre-ripping the trench line will be used as required by ground conditions.

Prior to trench excavation, snow and LFH[2] may be piled over the trench line to form an insulating barrier and prevent deep frost penetration. The stockpiled snow and LFH is then removed just prior to excavation to prevent mixing of the snow and LFH with the organic material.

Topsoil segregation is not practicable in winter sections because the soil profile will be frozen and bonded to the underlying mineral soil. The trench area will have been leveled for trencher operation by ice pad (Mode 1), snow (Mode 2), granular material (mode 4), or by grading (mode 5A).

During winter construction, trenching will follow pipe lay to minimize open ditch duration. If drill and shoot of the ditch is required before stringing the pipe, new methods may be developed such as pre-blasting the ditch before stringing and ditching before lower-in. If pre-shot trench in permafrost freezes back before lower-in, it may be necessary to dig and backfill the ditch after shooting and then re-excavate the ditch prior to lower-in to ensure a diggable ditch and to avoid accumulation of blowing snow in an open ditch.

4.4.2 Lowering-in and Backfilling

Lowering-in, placement of bedding and padding, placement of ditch plugs, installation of cathodic protection anodes and test stations, and ditch backfill are performed the same in winter as in summer. Winter weather conditions such as drifting snow and new snowfall have the potential to disrupt the smooth flow of these sequential operations.

During the trenching process the spoil will be assessed for ice content. Where the ice content is found to exceed that necessary to provide stable backfill properties, imported bedding, padding, and backfill may be used to supplement the native ditch spoil. The imported materials will be placed around the pipeline with any native, ice-rich spoil roached over the imported backfill.

A roach or crown over the pipeline trench will be present following backfilling. During the first spring and summer following backfilling the ice-rich roach is expected to thaw and the excess water to drain from the soils. With time, the backfill mass will settle with the expectation a relatively uniform ground profile across the trench line will develop.

The longer time some excavated materials are exposed to freezing temperatures, the more difficult it can become to properly backfill the trench with these materials. Continuous chain trenchers will produce mostly uniform material ideal for bedding and padding if not ice-rich. Drill and shoot ditch spoil excavated by backhoes may freeze or may be larger, angular blocks, which will be walked down by tracked equipment to eliminate voids in the backfill and thus limiting trench subsidence following spring thaw. Where subsidence does occur, the trench will be dressed up to fill any sunken areas and appropriate ECD will be installed as needed to allow for natural surface drainage during spring and summer thaw.

Monitoring of the crown is described in Section 6.8.

4.4.3 Hydrostatic Testing

All hydrostatic testing and pipeline dehydration is planned for summer and fall. No winter hydrostatic testing is planned.

4.4.4 Stream & Flood Plain Crossings

Typical methods of crossing Streams and Flood Plains are shown in Resource Report No. 1; appendix E, Figures E-58 through E-66. Waterbodies which are frozen ground-fast are not considered waterbody crossings and will be constructed utilizing regular upland construction

[2] LFH or 'litter, fibric, humic (organic layers developed primarily from leaves, twigs, and woody materials, with a minor component of mosses).'

methods. ATWS for the ditch spoil pile may be on snow or ice on the frozen waterbody. A number of stream and flood plain crossings in summer construction sections are planned as winter crossings due to constructability and fish habitat issues.

ROW modes are not currently assigned at the Stream and Flood Plain crossings summarized in this report's tables, but in general will be the same as the adjacent ROW modes such as Mode 1 (Ice work pad) or Mode 2 (Frost Packing) in winter lay sections; or Mode 4 (Granular work pad) or Mode 5 (Graded) in winter or summer lay sections. Certain streams will have a bridge across the active flowing stream channel.

5.0 SUMMER PERMAFROST CONSTRUCTION PROCEDURES

Summer and shoulder season construction over permafrost is discussed in the following sections.

5.1 RIGHT-OF WAY PREPARATION – SUMMER

Preparing the ROW for Mainline construction during the spring shoulder season will not be planned when ground conditions are saturated. ROW preparation in summer or the fall shoulder season may consist of granular work pad construction, conventional grading of complete sections or to connect discontinuous granular work pad sections, or timber matting. When ambient temperatures drop below freezing in the fall shoulder months, frost packing may begin. Depending on the ROW mode selected, the following activities will take place:

5.1.1 Granular Work Pads over Permafrost

Construction of granular work pads in summer or fall is similar to winter installation and is described in Section 4.1.3. Granular pad for summer work may require a deeper fill than for winter work to prevent rutting or deformation of the active layer. Granular fill in permafrost terrain is best placed in winter or early summer because the active layer deepens in late summer and fall which allows fill to be compressed into the active layer. In Spreads 1 and 2 granular work pad placement may occur in the spring shoulder months if the ground is solid, snow has been cleared, and there is no runoff from snow melt.

Stripping and replacing organics would damage the insulating vegetation mat and could lead to thermal instability causing settlement and erosion of the underlying permafrost. The Project will use granular work pads for portions of the route for safe and stable construction and to reduce long term permafrost degradation impacts to the pipeline and ROW.

5.1.2 Conventional Grading

Conventional grading, including blasting in bedrock or permafrost during summer or the fall shoulder season is identical to the winter method described in Section 4.1.4. Conventional grading is to be avoided during the spring shoulder season during snow melt when the ground is saturated.

5.1.3 Matting

The vegetation layer over permafrost becomes saturated wetland when seasonally thawed, and exists over long stretches of permafrost from the North Slope to as far south as Cantwell. Wetland construction methods of matting these long stretches permafrost terrain is not practicable, even when the terrain is flat, due to the damage matting may do to the vegetative mat. Additionally, the cost and logistics of importing and handling the thousands of mats is not economic (approximately $1,100 per 4-foot x 16-foot mat delivered to Fairbanks, Alaska).

In permafrost wetlands, local matting of just the ditch excavation at streams and some wetland crossings is anticipated during summer and the fall shoulder season, but as with other ROW preparation methods is not planned as a spring shoulder season activity until the ROW stabilizes after the spring thaw.

Use of hardwood mats on non-permafrost ROW is planned in short wetland sections which will support their use. The string bogs prevalent south of Cantwell (MP 570) beginning in Broad Pass and continuing to the Yentna River (MP 721) are considered too saturated and deep to support the use of timber mats, and may require granular fill or bridging whether in summer, fall, or winter. These string bog crossings are also too short for push-pull techniques and will be treated more as conventional open cut water body crossings.

5.2 RIGHT-OF WAY MAINTENANCE

Continuous maintenance of the ROW and access roads with motor graders will be provided to ensure trafficabiliity for stringing tractors and other rubber tired vehicles. Use of water trucks during the summer for dust control will be part of this effort. Installation of steam lines or heat tracing in culverts prone to winter ice dams would also be placed during the summer so mobile heater trucks can attach and thaw them if icing becomes a problem.

ROW maintenance during the spring shoulder season (April-May) will be avoided until the ROW is thawed, dry, and stable enough to support heavy equipment and rolling stock. Some maintenance of erosion control devices may require attention to control active erosion.

ROW maintenance during the fall shoulder season (October-November) will continue as in the summer months until the ROW is frozen. Early snow removal will be preferentially by snow blower however dozers and front end loaders may also be used if snow blowers encounter skids or other foreign material.

5.3 ACCESS ROAD CONSTRUCTION

Permanent and temporary access roads are described in detail in Section 4.3. Both temporary and permanent access roads constructed of granular materials will be built during both winter and summer seasons to support the ROW access required by the pipe lay sequence and locations. Construction of access roads during the spring shoulder season is not planned. Construction of access roads during the fall shoulder season will be the same as in summer until the first snowfall, at which time snow removal will be required.

5.4 OTHER ACTIVITIES

The following activities will also be undertaken as part of the summer and fall shoulder season pipeline construction process, but avoided in the spring shoulder season during active snow melt and runoff.

5.4.1 Ditching

See also Section 4.4.1 above.

Ditch mode in permafrost in summer and fall shoulder season will preferentially be by chain trencher behind the pipe lay to minimize open ditch duration, reducing the risk of trench wall instability caused by thawing permafrost. If the summer or winter ditch in permafrost must be drilled and shot, the ditch blasting will proceed ahead of pipe lay and close sequencing of successive operations will be required to minimize open ditch duration.

Topsoil segregation is not practicable in thaw sensitive permafrost during the summer or the fall shoulder season because a flat and stable platform for the trenching equipment must be created on the ditch line. Removing and segregating the organic layer and soil beneath would not be possible until it had thawed down to the active layer which would not occur until late summer. Even if the frozen organic layer and soil could be stripped, the solar radiation and warm air temperatures of summer would turn the stripped ditch line into a quagmire not capable of supporting the use of continuous trenchers or backhoes, which require a stable surface. Use of granular work pads on the working side and a thin granular leveling course on the ditch line will protect the permafrost from thawing and turning into a quagmire, while providing all heavy pipeline equipment with a stable working surface. The granular work pad must be placed in the winter season when it is not possible to separate the frozen organic layer. If the organic layer were stripped in the summer prior to winter placement of granular work pad, the thermal erosion of the stripped area would turn the ditch line into a linear bog due to active layer thawing. Also, ditching in permafrost during the summer will

follow pipe lay to avoid trench wall thawing and failure. Pre-stripping the organics before trenching would create a surface bog which would be impossible for excavators to set up on. In the case of thaw stable permafrost where the ROW is graded (Mode 5A), such as on south facing hills between MP 280 and 400, the organic mat may be bladed to the side of the ROW by dozers or backhoes and stored during the grading operation prior to creating a flat ROW.

During summer and fall construction, permafrost trenching will follow pipe lay to minimize open ditch duration to maintain ditch wall stability. If the ditch requires drill and blast, the ditch may be shot and dug before stringing, as is conventional summer pipelining in non-permafrost. If trench wall instability occurs before lower-in, it may be necessary to shoot, dig and backfill the ditch before stringing and then re-excavate the ditch prior to lower-in to ensure a diggable ditch and to minimize open ditch duration.

5.4.2 Lowering-in and Backfilling

See Section 4.4.2 for description of these activities for summer, fall shoulder season, or winter.

5.4.3 Cleanup and Restoration

As part of final clean-up and restoration, cross ROW surface water drainage will be assessed and enhanced by providing engineered pathways for surface water to transect the ROW. Any uneven settlement or excessive roach will be dressed up to provide a uniform ground profile along the pipeline. Cleanup and restoration will be mainly during the summer months, but may continue into the fall shoulder season if ambient temperatures allow. Some winter restoration, especially of stream banks and channels in beaded streams in permafrost terrain, will be done in winter for winter pipe lay sections. Similar stream crossings installed during summer or the fall shoulder season will be restored immediately after stream crossing installation.

5.4.4 Hydrostatic Testing

The pipeline scope for the Mainline is currently planned to proceed in two winter and two summer pipe installation seasons, with all hydrostatic testing performed in the two summer seasons. In some sections, hydrostatic testing and dehydration will begin in the spring shoulder month of May and continue into the fall shoulder month of October. Heaters, enclosed shelters, and boilers may be employed as needed when ambient temperatures drop below freezing. The PTTL is planned for aboveground installation during one winter, with hydrostatic testing to be performed the following summer, with no work planned during either shoulder season.

6.0 INITIAL RESTORATION PROCEDURES

The short growing seasons on the northern portion of the pipeline will impact restoration and revegetation and may require extended efforts to stabilize the ground where permafrost exists. This includes time for the disturbed ground to reach a new thermal equilibrium.

Disturbance to permafrost will result from ROW clearing (within the boreal forest area), trenching, and grade-cuts on the ROW. While the installation of granular pads does not breach the tundra or cut into permafrost, the granular pads will conduct solar radiation to the underlying permafrost resulting in some long-term ground thaw. The extent of these construction impacts may result in long-term changes to the surface and subsurface thermal and drainage regimes that, when combined with annual variations, may extend or shorten the period in which equilibrium is re-established.

Initial restoration of wetlands in winter sections should be completed to the maximum extent practicable during frozen conditions as access to complete additional remediation following spring melt may be limited. Completing this remediation work during non-frozen conditions may require specialty equipment, such as floatation (swamp) hoes.

Permafrost terrain stabilization and rehabilitation activities may extend several years after construction and initial rehabilitation is complete. Complete details of the ROW restoration are provided in the Project Restoration Plan. This section only deals with those activities to be undertaken by the construction contractor's 'cleanup' activities immediately after the completion of construction.

6.1 EROSION CONTROL IN PERMAFROST

When the ground surface is frozen, no surface erosion should occur. This applies to both permafrost and non-permafrost terrain. Within permafrost terrain, when the active layer is thawed following spring breakup, typically reaching its maximum depth in about late September, erosion potential at the ground surface is essentially the same as it would be in non-permafrost terrain. During seasonal thaw periods, permafrost soil terrain behaves like non-permafrost soil relative to erosion susceptibility and control. Based on the preceding discussion, all mineral soil regardless of whether it is within permafrost or not can be treated the same from an erosion protection perspective.

There are several aspects of erosion control influenced by the permafrost conditions of arctic environments. First, frozen soils are generally less erodible than unfrozen soils, all else being equal. This is due to the cohesive nature of the frozen soil mass. This generalization is not absolute and in springtime, when rain or snow melt falls on an exposed frozen mineral soil, the passage of water may still induce erosion by melting the ice bonding the soils particles together and then mobilizing those soil particles. If the ice content is substantial, the release of the melted ice may contribute to additional melting and erosion downslope. The loss of frozen soils through the flow of rainwater, snow melt, and liberated soil-ice is termed thermal erosion.

The second important aspect of permafrost soils is the presence of the seasonal active layer. This is the relatively thin layer at the ground surface which experiences seasonal freezing and thawing. The thickness of the active layer depends on several factors, primarily mean annual air temperature, ground cover and thickness of the surface organic layer (if any), and soil properties (mineralogy, texture and water content). The typical thickness ranges from about one foot on the North Slope to upwards of five feet or more near the southern boundary of permafrost.

Where ROW grading or pipeline trenching exposes ice-rich soils, the erosion potential, susceptibility, and volume may be elevated above that of non-permafrost soils. As noted above, thermal erosion will exacerbate erosion of susceptible mineral soils through the melting of interstitial

or massive ice present in the exposed soils. This aspect of erosion in permafrost terrain is the most significant and important difference compared to erosion in non-permafrost terrain.

Permanent erosion control devices will be used where physical and/or climatic conditions are present that allow erosion to initiate and sediment transport to occur. The following erosion control strategies, typically used for pipeline construction projects, may be used individually or in combination with other methods to achieve the desired level of mitigation:

- Pipe Ditch Plugs
- Diversion Berms
- Mulch of ditch line or full graded ROW width, as appropriate
- Revegetation of ditch line and graded ROW or granular work pad
- Erosion control matting and blankets in ROW cuts and restored cuts

More information on the above can be found on the Alaska LNG Plan; Section V. Restoration; Sub-section B. Permanent Erosion Control Devices.

6.2 DITCH LINE REHABILITATION

The following measures will be implemented along the ditch line:

- Place select bedding and padding under and around pipe in areas where potential thawing of ice-rich spoil used as backfill could lead to ditch subsidence. Placement of imported granular material as bedding and padding displaces ice-rich native soils and mitigates thaw settlement. Placing native ditch spoil over padding allows it to thaw and settle during the summer months.
- Replace organic spoil on top of backfill in areas where the organic spoil is segregated during ditching.
- Apply mulch and re-seed ditch line, as necessary.
- Monitor subsidence of ditch spoil and re-shape as needed to promote vegetation growth and prevent water flow or ponding along or across the ditch line.
- Manage surface drainage along and across ditch line to prevent ingress of water and channelization of ditch.

6.3 GRANULAR PADS REMAIN IN PLACE

Granular work pads will be left in place after construction. Work pad material may be shaped and spread across the ditch line. Water bars or diversion berms will be placed on slopes to prevent erosion. If access along the ROW is anticipated during operations, appropriate access to the ROW will remain in place and the ROW surface will be maintained to support this activity.

6.4 MANAGEMENT OF ICE-RICH CUT SLOPES

One unique characteristic to permafrost terrain is the potential presence of ice-rich soils, exposed in cut slopes or under longitudinal slopes. This ice-rich soil may require special consideration from an erosion control and permafrost stability perspective. Exposed ice-rich permafrost is more susceptible to erosion than similar soils in non-permafrost terrain. This is due to the fact as the exposed ice melts and converts to water, the soil particles which were bonded by the ice are immediately liberated and available for transport by the free water. This situation leads to the potential for large volumes of sediment to be eroded from gentle to steeply sloping terrain.

Where ROW cuts in permafrost encounter ice-rich material not structurally suitable for ROW cut and fill, the unsuitable material will be hauled to an approved disposal site and allowed to thaw before shaping and re-vegetating the disposal site during final project restoration.

Ice-rich longitudinal slopes along the ROW may experience long-term instability as a result of removal of trees and an increase in solar radiation reaching the ground. With time, the ice will melt, increasing the soil pore water pressure and reducing the strength of the soils. Active layer detachment flows and related slope instability may result. The instability can be mitigated by controlling the rate of permafrost thawing on the slope.

Along the Mainline route, ice-rich slopes will be engineered for long-term stability. For example, methods considered include:

- Cut sloped terrain to a vertical profile in order to lessen the exposed side hill soils to erosion and to allow natural thawing of the cut to establish its own angle of repose (Berg and Smith, 1976).[3]
- Installation of a granular berm on the exposed ice-rich mineral soil as the primary cut slope mitigation strategy, a method used by Alaska Department of Transportation and Public Facilities (ADOT&PF). This technique uses a layer of well graded gravel material placed on the graded slope to a thickness of two feet. The gravel layer provides a filter function allowing melt water to escape the slope, but in-situ particles are retained under the gravel blanket. As thaw subsidence develops, the granular layer deforms to the contours of the cut slope.
- For longitudinal slopes, install thermosyphons on the slope or place insulation on the slope to control the rate of permafrost thawing so slope instability is not initiated. Both methods have been used successfully by Alyeska Pipeline Service Company on the TAPS. The latter method was used successfully on over 50 slopes on the Norman Wells pipeline in northern Canada (Hanna and McRoberts, 1988)[4]. For Norman Wells a layer of locally derived wood chips between 2 feet and 3.5 feet thick were used as the insulation layer. For Alaska LNG, no significant source of wood chips will be available, so this method is not planned.

6.5 WATERBODY BANK REHABILITATION

Hydraulic scour may result in the exposure of ice-rich soil in stream banks cut by the ROW grading or ditch excavation. To address bank scour, mitigation and restoration is performed first as soon as practical after pipeline installation and backfilling, with additional site work potentially required in summer months.

The following measures may be implemented and developed in consultation with Alaska regulatory agencies:

- Excavation of crossings, placement of ditch plugs, and restoration of disturbed banks during the winter season when small streams are totally frozen will limit bank disturbance and mitigate thermal erosion.
- Replacement and stabilization of stream banks in permafrost terrain with geotextile underlayment, followed by placement of select granular material and finished with erosion protection techniques such as riprap, timber/log armoring, armored geo-grid or other measures that will stabilize bank restoration and mitigate thermal degradation.

[3] Berg, R. and Smith, M. 1976. Observations along the pipeline haul road between Livengood and the Yukon River. U.S. Army CRREL Special Report 76-11. October 1976.

[4] Hanna, A.J. and McRoberts, E.C. 1988. Permafrost slope design for a buried oil pipeline. *In* Proceedings of the 5th International Permafrost Conference, Trondheim Norway, Volume 2. pp. 1247 – 1252.

- Placement of riprap or other scour protection in channels analyzed and recommended by hydrologists will help to restore stable stream hydrology and to prevent future streambed erosion or scour.

6.6 TOPSOIL REPLACEMENT

No stripping and/or replacement of stripped topsoil is envisioned on the Project because there is no farmland.

Where conventional grading of the ROW is performed in wetlands in summer, whether in flat terrain or on slopes, the loose surface material will be stripped and stockpiled on one or both sides of the ROW before grading, and spread back over the ROW as part of cleanup and restoration.

There are no plans to segregate the ditch line organic materials from ditch spoil.

6.7 SEEDING

As required by Alaska regulatory agencies and in accordance with the Project Restoration Plan, re-seeding of the ditch line and the spoil side and of the granular work pad or graded terrain ROW mode may be undertaken. Where performed, seeding will be accomplished by hydroseeding with an approved seed mix.

6.8 MONITORING PLAN

Maintaining good records of conditions encountered during backfilling will help develop expectations of post-construction restoration requirements. Where the trench has been backfilled with frozen material, the Project should monitor for subsidence and excessive crowning conditions. Probing of the backfilled material may be necessary to determine if frozen spoil persists prior to conducting crown remediation.

The Project will keep an environmental crew on site or on call through the periods of thaw, to monitor erosion control structures and stabilization efforts and make adjustments or repairs as necessary and as ROW conditions allow. Stockpiles of materials will be suitably located to allow efficient repair and maintenance of erosion controls. Crews will have the proper LGP equipment such as all-terrain vehicles with oversized tires, available to allow access to the ROW under soft soil conditions, and to prevent rutting, topsoil mixing, and damage to other temporary erosion controls such as drivable berms.

If final cleanup and restoration activities have not occurred prior to the spring melt, monitoring of the ROW will be implemented during the delay between construction and restoration or temporary shutdown of construction activities. The monitoring program should identify: (1) erosion control structures requiring repair; (2) areas of slope instability; and (3) areas where significant levels of erosion are occurring. The Project should determine the most effective means of dealing with identified problems, taking into consideration the suitability of the ROW for access by equipment, potential damage which could occur by equipment accessing the ROW, and the urgency/significance of the problem.

7.0 CONCLUSIONS

Alaska's unique permafrost and wetland terrain have no analogs to compare with conventional Lower 48 wetland construction methods. The project challenges require unique exceptions to the FERC standard wetland procedures in order to build the Alaska LNG Pipeline.

North of the Brooks Range from the Beaufort Sea coast to the Upper Atigun Valley (MP 0 to MP 153), current regulations by BLM and ADNR prohibit heavy equipment of the type needed to build the pipeline from operating on permafrost wetlands except on ice roads during the winter tundra permit window or from granular work pads such as used for the TAPS ROW. USACE wetland fill permits recognize the primacy of minimizing thermal degradation in permafrost terrain, even though classified as wetlands. Current tundra access regulations north of the Brooks Range require setting aside conventional accepted pipeline methods for crossing wetlands.

South of MP 153 permafrost is continuous for 256-miles (MP 153 to MP 409), then discontinuous for 206-miles (MP 409 to MP 615). Tundra and permafrost access in these areas require permits from the BLM or ADNR but no formal process is in place as with ACP tundra permits relying instead on the applicant's proposed work plan. Most continuous and discontinuous permafrost terrain is classified as wetlands. Matting across permafrost wetlands is not feasible because most of the terrain is not level as is required for matting. For level thaw sensitive permafrost placement and removal of mats would damage the organic surface mat and accelerate thermal degradation of the ROW, resulting in thermokarsting and more erosional problems than a granular fill ROW. Based on this knowledge, the Alaska LNG design criteria and work plan is based on minimizing changes to the thermal state of thaw sensitive permafrost through use of granular fill ROW.

Permafrost terrain is prevalent in Alaska and comprises 80% of the northern 600 miles of the Alaska LNG Pipeline route. Construction in permafrost areas requires special techniques to limit thermal degradation and erosion. Because most permafrost is capped by a poorly drained organic wetland mat in both flat and sloped terrain, permafrost construction techniques are significantly different from the FERC baseline guidelines for wetland construction set out in the FERC Wetland and Waterbody Construction and Mitigation Procedures. The permafrost wetlands are so extensive and continuous it is impractical to avoid them or to route around them or to restrict the ROW width to 75-feet. Refer to Attachments B, C, and D for tables which summarize the extent of permafrost and its associated wetlands. The focus of construction and reclamation is the permafrost and the presence or absence of thaw sensitive soils. Stabilization during and after construction is critical to long-term operational success of the pipeline.

Pipeline construction in Alaska benefits from a winter construction season because winter represents a large portion of the year, and flat terrain (both permafrost and non-permafrost) is more easily accessed with less impact by using ice work pads and frost packing. Also, the remote location with its requirement for construction camps for housing workers, and the great distances required to mobilize heavy equipment and specialized personnel mandates utilization of as much of the calendar year as possible, including summer and fall, to minimize construction costs.

Specialized winter and permafrost construction methods were developed during construction of the TAPS, Alaska's North Slope oilfields, and northern Alaska highways. These methods apply to construction of pipelines, roads and facilities related to the Alaska LNG Project. Specific considerations relative to the Alaska LNG pipeline construction include the following:

- Permafrost terrain is unique to Alaska and requires unique construction methods to minimize long term thermal degradation, including thaw settlement and erosion of the ground adjacent to the pipeline and the pipeline ROW.
- Approximately 600 miles of the total 807 mile pipeline ROW traverses continuous or discontinuous permafrost terrain.

- Permafrost is typically blanketed by an organic mat that absorbs surface water. The permanently frozen soil below prevents it from seeping into subgrade. The permanently frozen soil is an aquiclude. This organic mat, when thawed, constitutes a 'wetland' classification. This condition applies to all permafrost terrain, whether flat or sloped.
- The construction method of matting conventional wetlands cannot be used on permafrost wetlands because most permafrost terrain is not flat. The organic layer would be damaged by using mats, thus accelerating thermal degradation. Also, given the project location, the $1,100 cost of a 4-foot x 16-foot mat is cost prohibitive as a ROW mode for hundreds of miles of permafrost.
- Pipe can be laid in permafrost terrain in either summer or winter so long as the thermal integrity of the permafrost is not compromised. In flat, thaw sensitive permafrost terrain with access to abundant fresh water sources, this can be achieved in the winter by constructing ice roads or ice work pads. In flat, thaw stable permafrost terrain, this can be achieved through frost-packing or grading. In flat or sloping thaw sensitive permafrost terrain where water access is poor, the time-proven method for building a pipeline is to use granular fill on top of the organic mat. In flat thaw stable terrain, such as floodplain gravels, the permafrost may be graded conventionally in summer or winter. In sloping thaw stable terrain, such as bedrock hills, the permafrost may be graded conventionally in summer after first stripping off the organic mat.
- Both winter and summer seasons must be utilized during construction in order to promote cost-effective use of equipment and manpower, most of which are mobilized from thousands of miles away.
- Most permafrost terrain along the route is thaw sensitive and construction methods must be used which minimize the potential for thawing and eroding the permafrost soils. There are only two permafrost segments on the project which are flat and have abundant water available for building ice work pads; MP 0 to MP 57 on the North Slope and part of MP 435 to MP 470 in the Minto Flats.
- Permafrost terrain varies from flat on the ACP, to gently rolling hills and valleys, to steep and choppy hills. Permafrost in all these terrain types traps water in the active layer below surface vegetation. The active layer is one to three feet thick, and thaws during the summer months and refreezes during the winter. In the thawed state, the active layer is typically classified as wetland. Except for the ACP, most of the permafrost wetlands have a sidehill or longitudinal slope, which makes it impossible to use the conventional timber mats typically used in Lower 48 wetlands. Thaw sensitive permafrost should not be graded because breaching the vegetative mat removes the natural insulation which keeps it in the frozen state. This in turn can cause thermokarsting, which is thermal erosion followed by physical erosion of the newly thawed soils.
- Summer construction with granular work pads is preferable to take advantage of temperate weather, more daylight, safer working conditions, increased productivity, and lower costs.
- Winter construction presents significant challenges related to safety and productivity, including severe weather events, darkness, snow management, schedule, manpower availability, poor traction for equipment and personnel, and journey management during extreme weather conditions.
- Winter construction utilizing ice work pads can mitigate impacts to wetland tundra or the organic mat that overlies permafrost soils. However, ice work pads are only feasible where the terrain is flat, permittable water sources plentiful, and the winter conditions cold enough to develop ice thick enough to support heavy equipment, such as MP 0 to MP 57.
- In thaw sensitive permafrost terrain north of the Brooks Range, ice work pads are not feasible due to lack of water and sloping terrain. Since grading thaw sensitive permafrost is not allowed, these conditions mandate the use of granular work pads as the only practicable method of building a pipeline ROW. Because equipment operation directly on the tundra is not permitted,

granular pads are constructed with imported fill which is placed and spread as an advancing front so dump trucks and dozers do not operate on the tundra. This is true for either winter or summer construction, although tundra-legal LGP equipment can be employed for pre-packing frost in early winter.

- In permafrost terrain south of the Brooks Range a variety of ROW modes are feasible, including grading of thaw stable permafrost, placing granular work pads over thaw sensitive permafrost, and frost packing in thaw stable permafrost.
- The vegetation layer over permafrost becomes saturated wetland when thawed, and stretches from the ACP to as far south as Cantwell. Conventional wetland ROW construction methods utilizing timber mats along these stretches is not practicable primarily because most of the terrain is not flat. There is also a high potential for permafrost degradation caused by damaging the vegetative ground cover while placing and removing timber mats. The cost to purchase, transport, and handle the tens of thousands of mats required is very high. Where granular work pads are placed, a thin granular pad will extend over the ditch line to provide a working surface for trenching equipment, except at stream crossings.
- Winter construction in non-permafrost terrain will use conventional ROW preparation methods, such as frost packing wetlands in flat terrain and grading of uplands and sloping wetlands.

The project considered multiple factors to select the most appropriate construction season and ROW mode, such as:

- Health and safety of workers is more at risk during the dark, cold, and snowy winter conditions.
- Steep terrain is preferentially deemed summer construction for operational safety of heavy equipment on steep slopes as well as safer footing for workers on the ground.
- Non-permafrost wetland environments preferentially deemed winter construction when the wetland can support heavy equipment traffic and pipe lower-in loads while frozen.
- Costs of equipment operation and maintenance are significantly higher in winter months.
- Worker and equipment productivity and efficiency is significantly lower in winter months.
- Thaw sensitive permafrost, rolling terrain or flat terrain lacking water sources dictate use of granular work pad in either winter or summer.
- ROW accessibility from the road system.
- Season length (winter or summer).
- Balancing total schedule between summer and winter to best utilize resources, to optimize linear construction and minimize spread moves, and to provide continuity of employment for personnel.

Winter Construction is preferred for:

- Thaw sensitive permafrost in flat terrain where water is abundant for construction of ice work pad ROW. Ice work pads minimize ROW cost and minimize negative impacts to the tundra and the underlying permafrost except on the ditch line.
- Thaw sensitive, ice-rich soils due to potential ditch wall instability during summer months.
- Non-permafrost wetlands and string bogs, which will not support equipment even with use of mats in summer, will freeze solid when frost packing is utilized. Winter methods also help to avoid rutting and mixing of organic mat and mineral soil.

Winter construction is not feasible for the entire project because this would more than double the construction time and would incur large costs to hold idle equipment spreads over the summers if not working. Winter construction is also not feasible for several sections of steep terrain due to safety concerns. Winter ROW construction procedures include:

- Ice work pad on the ACP and possibly other select areas with flat terrain, abundant water sources, and below freezing temperatures such as occur sporadically south of Livengood (MP 400) to Healy (MP 520).
- Frost packed work pad, when terrain is mostly flat and over non-permafrost wetlands or thaw stable permafrost.
- Granular work pad over thaw sensitive permafrost where cross slopes exceed 2% or in flat terrain with little or no water resources for ice work pad construction.
- Graded or granular work pad can be utilized on flat or sloping thaw stable permafrost soil.
- Conventional grading of non-permafrost soils.

Building over permafrost may be done in summer with appropriate ROW methods including:

- Granular work pad over thaw sensitive permafrost.
- Thin granular work pad over thaw stable permafrost with thick organic mat and/or ice-rich active layer.
- Graded ROW on thaw stable permafrost with a thin organic layer.

8.0 ACRONYMS AND TERMS

Term	Definition
ACP	Arctic Coastal Plain
ADNR	Alaska Department of Natural Resources
BLM	US Bureau of Land Management
CGF	Central Gas Facility
ECD	Environmental Control Device(s) specified in SWPPP
FERC	Federal Energy Regulatory Commission
GTP	Gas Treatment Plant
LFH	Loose Surface Material – Material commonly known as LFH (*Leaf litter; Fermentation; and Humification – the three stages of decomposition*) or duff in the boreal forest.
LGP	Low Ground Pressure
LNG	Liquefied Natural Gas
PBTL	Prudhoe Bay Transmission Line
PBU	Prudhoe Bay Unit
PTTL	Point Thomson Transmission Line
PTU	Point Thomson Unit
ROW	Right of Way
SWPPP	Storm Water Pollution Prevention Plan
USGS	United States Geological Survey

9.0 REFERENCES

References
Berg, R. and Smith, M. 1976. Observations along the pipeline haul road between Livengood and the Yukon River. U.S. Army CRREL Special Report 76-11. October 1976.
Hanna, A.J. and McRoberts, E.C. 1988. Permafrost slope design for a buried oil pipeline. In Proceedings of the 5th International Permafrost Conference, Trondheim Norway, Volume 2. pp. 1247 – 1252.
van Everdingen, Robert, ed. 1998 revised May 2005. *Multi-language glossary of permafrost and related ground-ice terms*. Boulder, CO: National Snow and Ice Data Center

Attachment A: Right-of-Way Mode Drawings

RIGHT-OF WAY MODE #1 - ICE WORK PAD NORTH SLOPE (WINTER)

TYPICAL FIGURE E-35

ALASKA LNG

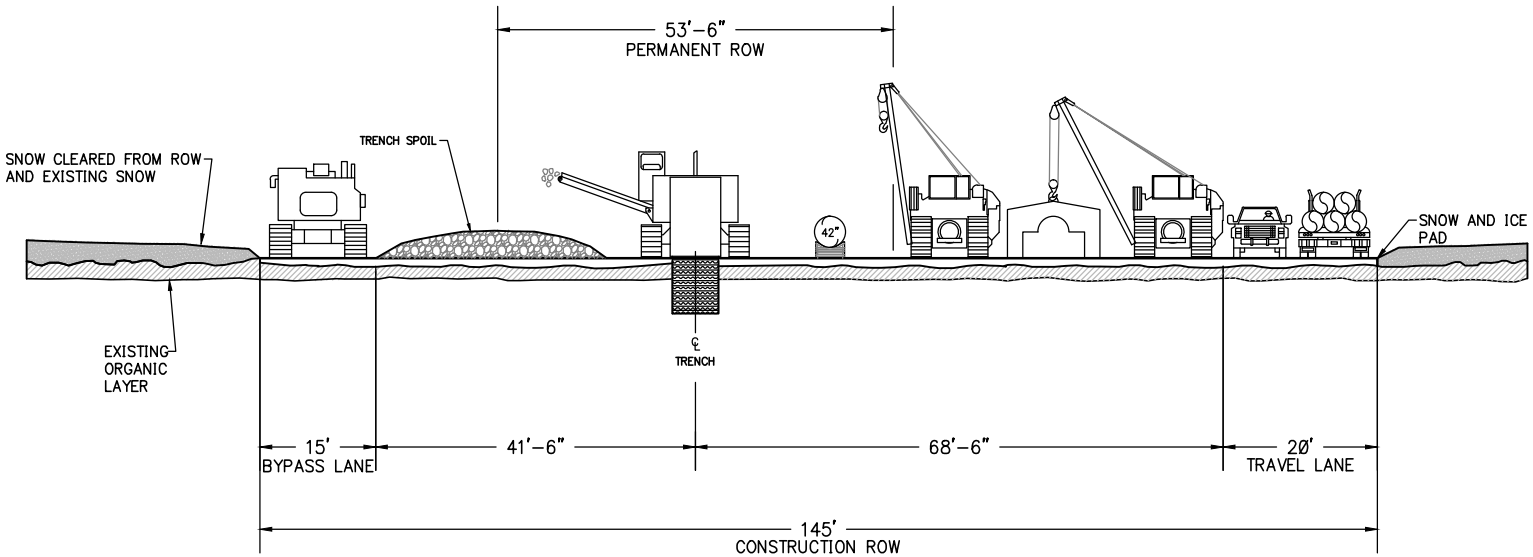

NOTES:

1. DRILL AND SHOOT MAY BE REQUIRED FOR DITCHING ACROSS LARGE ROCKY AREAS. IN THIS CASE, VOLUME OF DITCH AND SPOIL WOULD BE LARGER, REQUIRING ATWS FOR STORAGE (NOT SHOWN)

PRELIMINARY & SUBJECT TO CHANGE. ALL DRAWINGS AND DIMENSIONS TYPICAL

DISCLAIMER:

THE INFORMATION CONTAINED HEREIN IS FOR INFORMATIONAL OR PLANNING PURPOSES ONLY, IT DOES NOT NOR SHOULD IT BE DEEMED TO BE AN OFFER, REQUEST OR PROPOSALS FOR RIGHTS OR OCCUPATION OF ANY KIND, THE ALASKA LNG PROJECT PARTICIPANTS AND THEIR RESPECTIVE OFFICERS, EMPLOYEES AND AGENTS, MAKE NO WARRANTY, IMPLIED OR OTHERWISE, NOR ACCEPT ANY LIABILITY, AS TO THE ACCURACY OR COMPLETENESS OF THE INFORMATION CONTAINED IN THESE DOCUMENTS, DRAWINGS OR ELECTRONIC FILES. DO NOT REMOVE OR DELETE THIS NOTE FROM DOCUMENT, DRAWING OR ELECTRONIC FILE.

PREPARED BY:	EXP ENERGY SERVICES INC.		
SCALE:	N.T.S.		
DATE:	2017-04-14	SHEET:	1 OF 1

RIGHT-OF WAY MODE # 2 -
WINTER FROST PACKED

TYPICAL FIGURE E-36

ALASKA LNG

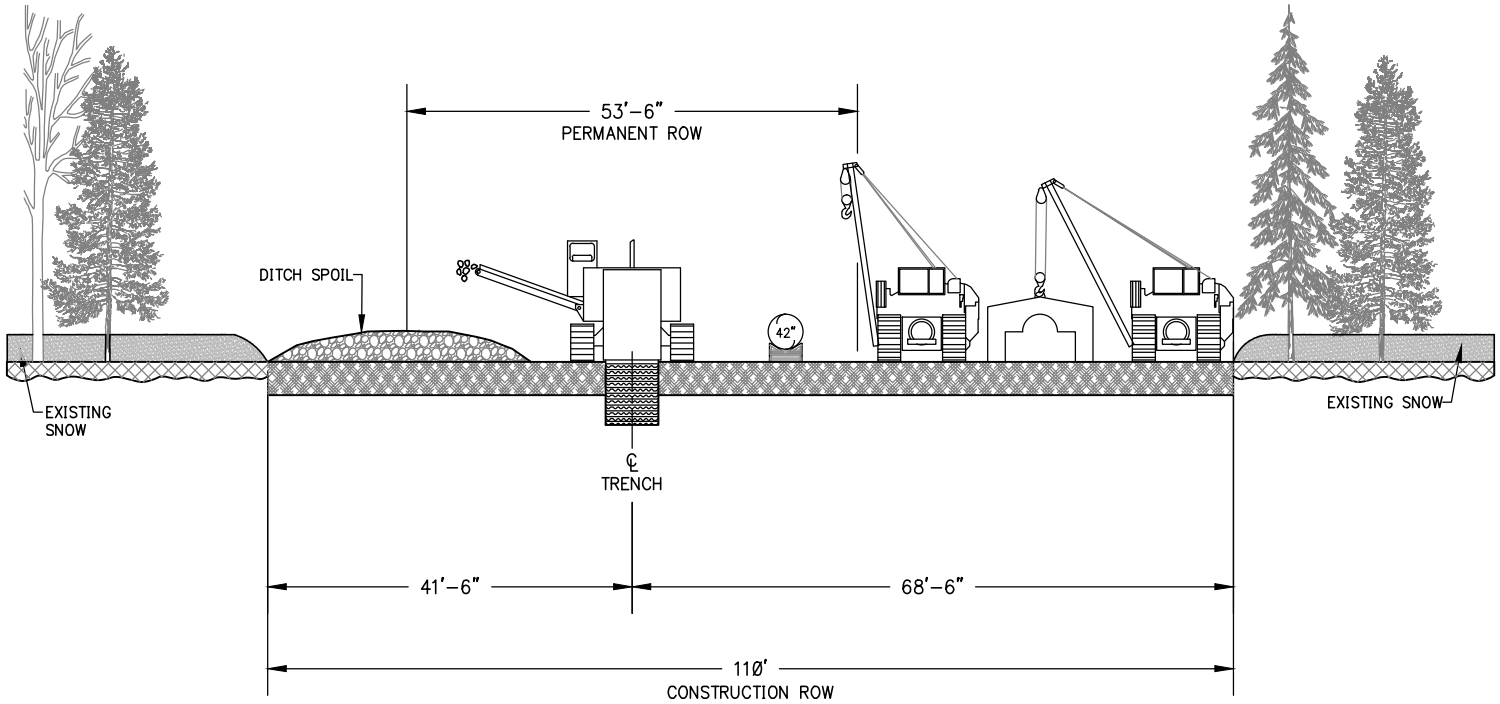

NOTES:

1. WHERE REQUIRED, 20 FEET MORE FOR TRAVEL LANE ON WORKING SIDE.
2. WHERE REQUIRED, 15 FEET MORE FOR BYPASS LANE ON SPOIL SIDE.
3. DRILL AND SHOOT MAY BE REQUIRED FOR DITCHING ACROSS ROCKY AREAS. IN THIS CASE, VOLUME OF DITCH AND SPOIL WOULD BE LARGER, REQUIRING ATWS FOR STORAGE (NOT SHOWN).
4. STORAGE FOR SNOW MANAGEMENT AND LOOSE SURFACE MATERIAL WILL REQUIRE ATWS (NOT SHOWN).
5. TREE STUMPS WILL BE REMOVED OVER THE DITCH-LINE AND DISPOSED OF, PRIOR TO DITCHING ACTIVITIES.

PRELIMINARY & SUBJECT TO CHANGE. ALL DRAWINGS AND DIMENSIONS TYPICAL

DISCLAIMER:

THE INFORMATION CONTAINED HEREIN IS FOR INFORMATIONAL OR PLANNING PURPOSES ONLY, IT DOES NOT NOR SHOULD IT BE DEEMED TO BE AN OFFER, REQUEST OR PROPOSALS FOR RIGHTS OR OCCUPATION OF ANY KIND. THE ALASKA LNG PROJECT PARTICIPANTS AND THEIR RESPECTIVE OFFICERS, EMPLOYEES AND AGENTS, MAKE NO WARRANTY, IMPLIED OR OTHERWISE, NOR ACCEPT ANY LIABILITY, AS TO THE ACCURACY OR COMPLETENESS OF THE INFORMATION CONTAINED IN THESE DOCUMENTS, DRAWINGS OR ELECTRONIC FILES. DO NOT REMOVE OR DELETE THIS NOTE FROM DOCUMENT, DRAWING OR ELECTRONIC FILE.

PREPARED BY:	EXP ENERGY SERVICES INC.		
SCALE:	N.T.S.		
DATE:	2017-04-14	SHEET:	1 OF 1

RIGHT-OF WAY MODE # 3 -
MATTED SUMMER WETLANDS

TYPICAL FIGURE E-37

ALASKA LNG

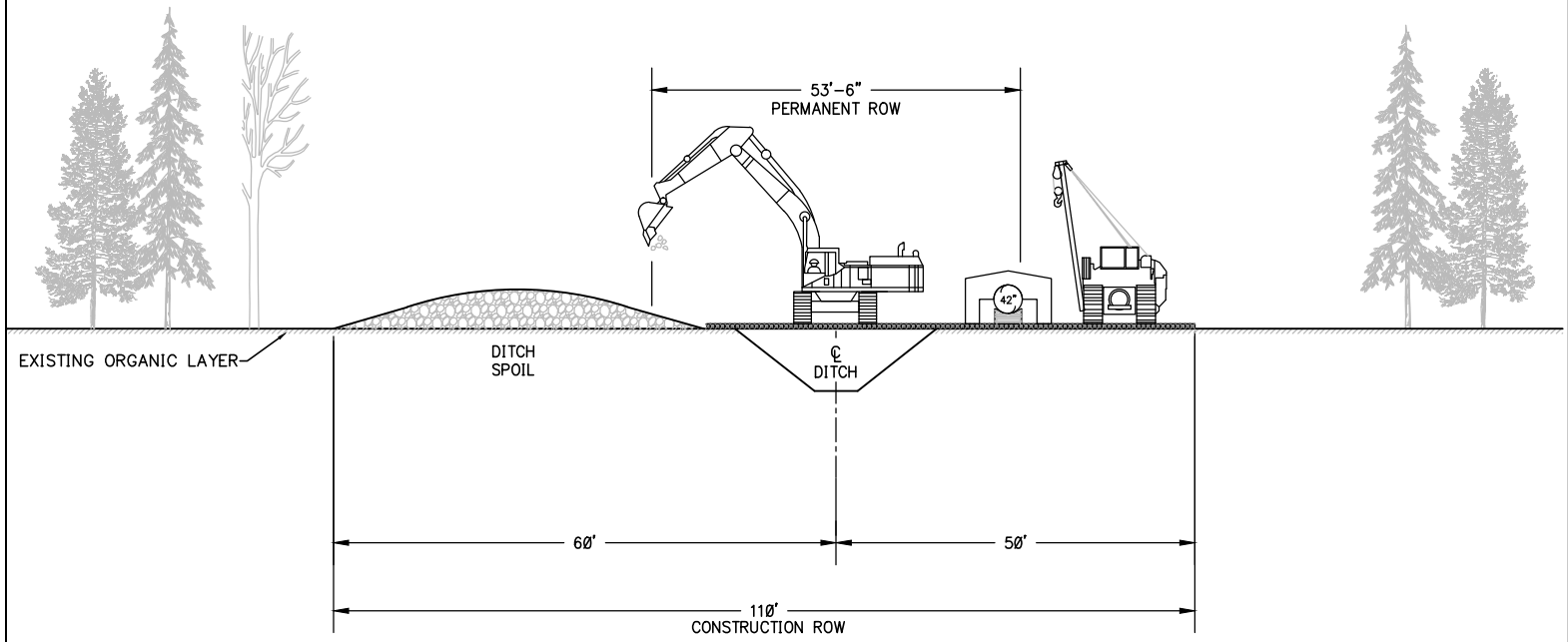

NOTES:

1. WHERE REQUIRED, 20 FEET MORE FOR TRAVEL LANE ON WORKING SIDE.
2. WHERE REQUIRED, 15 FEET MORE FOR BYPASS LANE ON SPOIL SIDE.
3. MATS WILL BE TRADITIONAL PIPELINE WETLAND MATS (HARDWOOD OR COMPOSITE).
4. MATS WILL BE USED ONLY AT SITE SPECIFIC LOCATIONS WHERE SATURATED WETLANDS PREVENT CONSTRUCTION EQUIPMENT FROM WORKING ON THE ROW.

DISCLAIMER:

THE INFORMATION CONTAINED HEREIN IS FOR INFORMATIONAL OR PLANNING PURPOSES ONLY, IT DOES NOT NOR SHOULD IT BE DEEMED TO BE AN OFFER, REQUEST OR PROPOSALS FOR RIGHTS OR OCCUPATION OF ANY KIND. THE ALASKA LNG PROJECT PARTICIPANTS AND THEIR RESPECTIVE OFFICERS, EMPLOYEES AND AGENTS, MAKE NO WARRANTY, IMPLIED OR OTHERWISE, NOR ACCEPT ANY LIABILITY, AS TO THE ACCURACY OR COMPLETENESS OF THE INFORMATION CONTAINED IN THESE DOCUMENTS, DRAWINGS OR ELECTRONIC FILES. DO NOT REMOVE OR DELETE THIS NOTE FROM DOCUMENT, DRAWING OR ELECTRONIC FILE.

PREPARED BY:	EXP ENERGY SERVICES INC.		
SCALE:	N.T.S.		
DATE:	2017-04-14	SHEET:	1 OF 1

PRELIMINARY &
SUBJECT TO CHANGE.
ALL DRAWINGS AND
DIMENSIONS TYPICAL

RIGHT-OF WAY MODE # 4 - GRANULAR WORK PAD OVER THAW SENSITIVE PERMAFROST (WINTER & SUMMER)

TYPICAL FIGURE E-38

ALASKA LNG

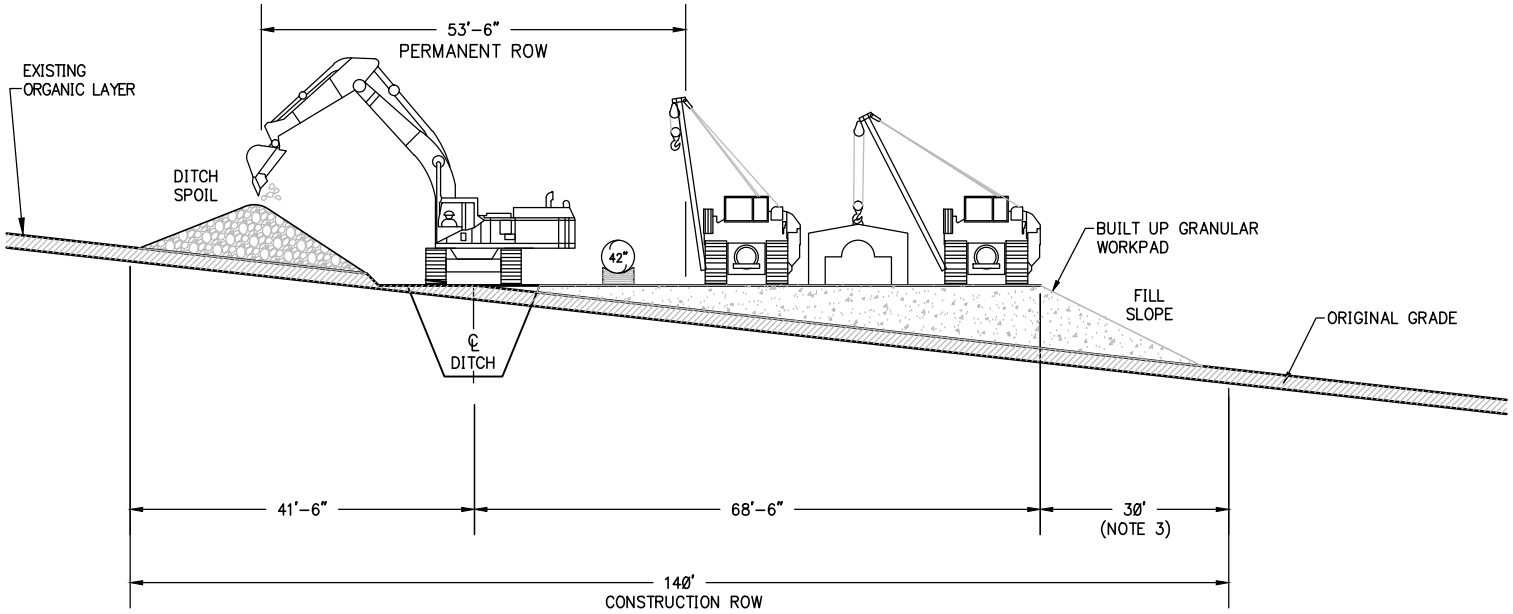

NOTES:

1. GEOTEXTILE AND GEOGRID REINFORCEMENT MAY BE PLACED AT BASE OF BUILT-UP WORK PAD.
2. NOMINAL CONFIGURATION FOR MAXIMUM OF 10% CROSS SLOPE.
3. WIDTH OF AREA FOR FILL SLOPE WILL VARY WITH TOPOGRAPHY AND MAY EXCEED VALUE SHOWN. CUT SLOPE AREA MAY ALSO BE REQUIRED FOR CROSS SLOPES STEEPER THAN 10%.
4. WHERE REQUIRED, 20 FEET MORE FOR TRAVEL LANE ON WORKING SIDE.
5. WHERE REQUIRED, 15 FEET MORE FOR BYPASS LANE ON SPOIL SIDE

PRELIMINARY & SUBJECT TO CHANGE. ALL DRAWINGS AND DIMENSIONS TYPICAL

DISCLAIMER:

THE INFORMATION CONTAINED HEREIN IS FOR INFORMATIONAL OR PLANNING PURPOSES ONLY, IT DOES NOT NOR SHOULD IT BE DEEMED TO BE AN OFFER, REQUEST OR PROPOSALS FOR RIGHTS OR OCCUPATION OF ANY KIND. THE ALASKA LNG PROJECT PARTICIPANTS AND THEIR RESPECTIVE OFFICERS, EMPLOYEES AND AGENTS, MAKE NO WARRANTY, IMPLIED OR OTHERWISE, NOR ACCEPT ANY LIABILITY, AS TO THE ACCURACY OR COMPLETENESS OF THE INFORMATION CONTAINED IN THESE DOCUMENTS, DRAWINGS OR ELECTRONIC FILES. DO NOT REMOVE OR DELETE THIS NOTE FROM DOCUMENT, DRAWING OR ELECTRONIC FILE.

PREPARED BY:	EXP ENERGY SERVICES INC.		
SCALE:	N.T.S.		
DATE:	2017-04-14	SHEET:	1 OF 1

RIGHT-OF WAY MODE # 5A - GRADED CROSS SLOPES (WINTER OR SUMMER)

TYPICAL FIGURE E-39

ALASKA LNG

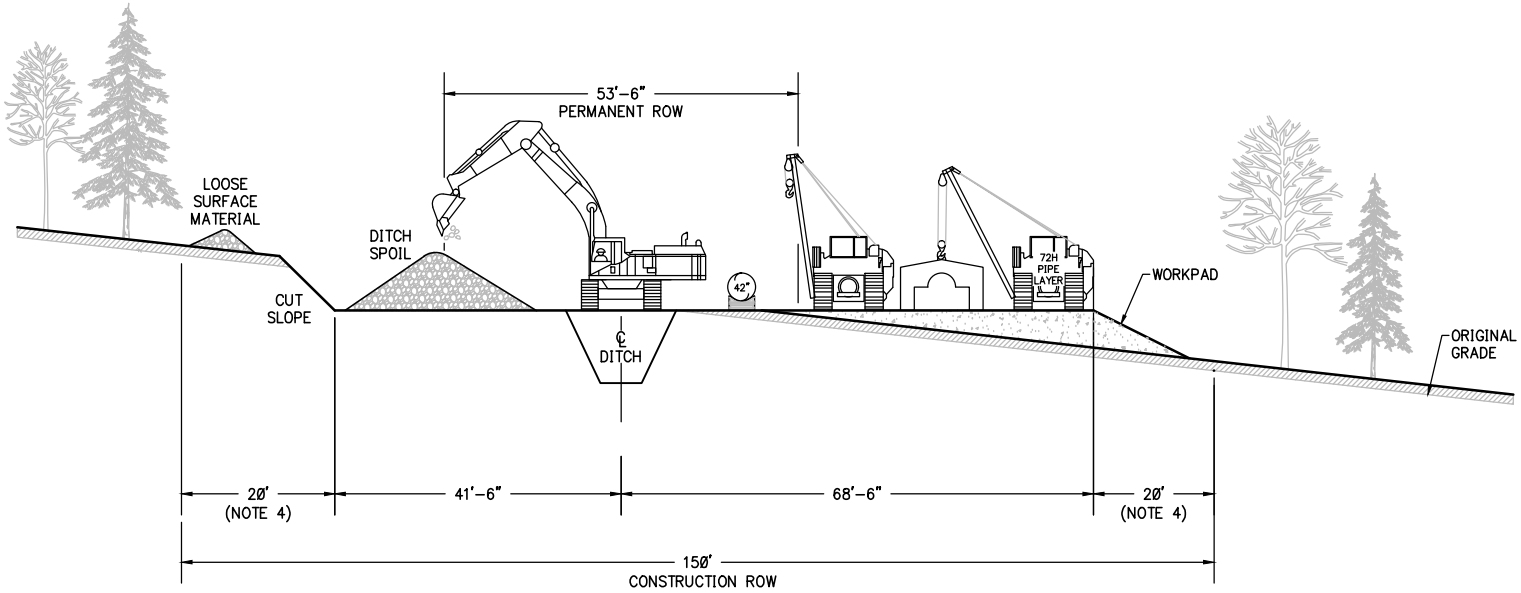

NOTES:

1. WHERE REQUIRED, 20 FEET MORE FOR TRAVEL LANE ON WORKING SIDE.
2. WHERE REQUIRED, 15 FEET MORE FOR BYPASS LANE ON SPOIL SIDE.
3. LOOSE SURFACE MATERIAL FROM GRADED CUT WILL BE STORED ON TOP OF CUT SLOPE WHERE REQUIRED.
4. WIDTH OF AREAS WILL VARY WITH TOPOGRPHY AND MAY EXCEED VALUE SHOWN.

DISCLAIMER:

THE INFORMATION CONTAINED HEREIN IS FOR INFORMATIONAL OR PLANNING PURPOSES ONLY, IT DOES NOT NOR SHOULD IT BE DEEMED TO BE AN OFFER, REQUEST OR PROPOSALS FOR RIGHTS OR OCCUPATION OF ANY KIND. THE ALASKA LNG PROJECT PARTICIPANTS AND THEIR RESPECTIVE OFFICERS, EMPLOYEES AND AGENTS, MAKE NO WARRANTY, IMPLIED OR OTHERWISE, NOR ACCEPT ANY LIABILITY, AS TO THE ACCURACY OR COMPLETENESS OF THE INFORMATION CONTAINED IN THESE DOCUMENTS, DRAWINGS OR ELECTRONIC FILES. DO NOT REMOVE OR DELETE THIS NOTE FROM DOCUMENT, DRAWING OR ELECTRONIC FILE.

PREPARED BY:	EXP ENERGY SERVICES INC.		
SCALE:	N.T.S.		
DATE:	2017-04-14	SHEET:	1 OF 1

PRELIMINARY & SUBJECT TO CHANGE. ALL DRAWINGS AND DIMENSIONS TYPICAL

RIGHT-OF WAY MODES #5B - MOUNTAIN GRADED CUT (SUMMER)

TYPICAL FIGURE E-40

ALASKA LNG

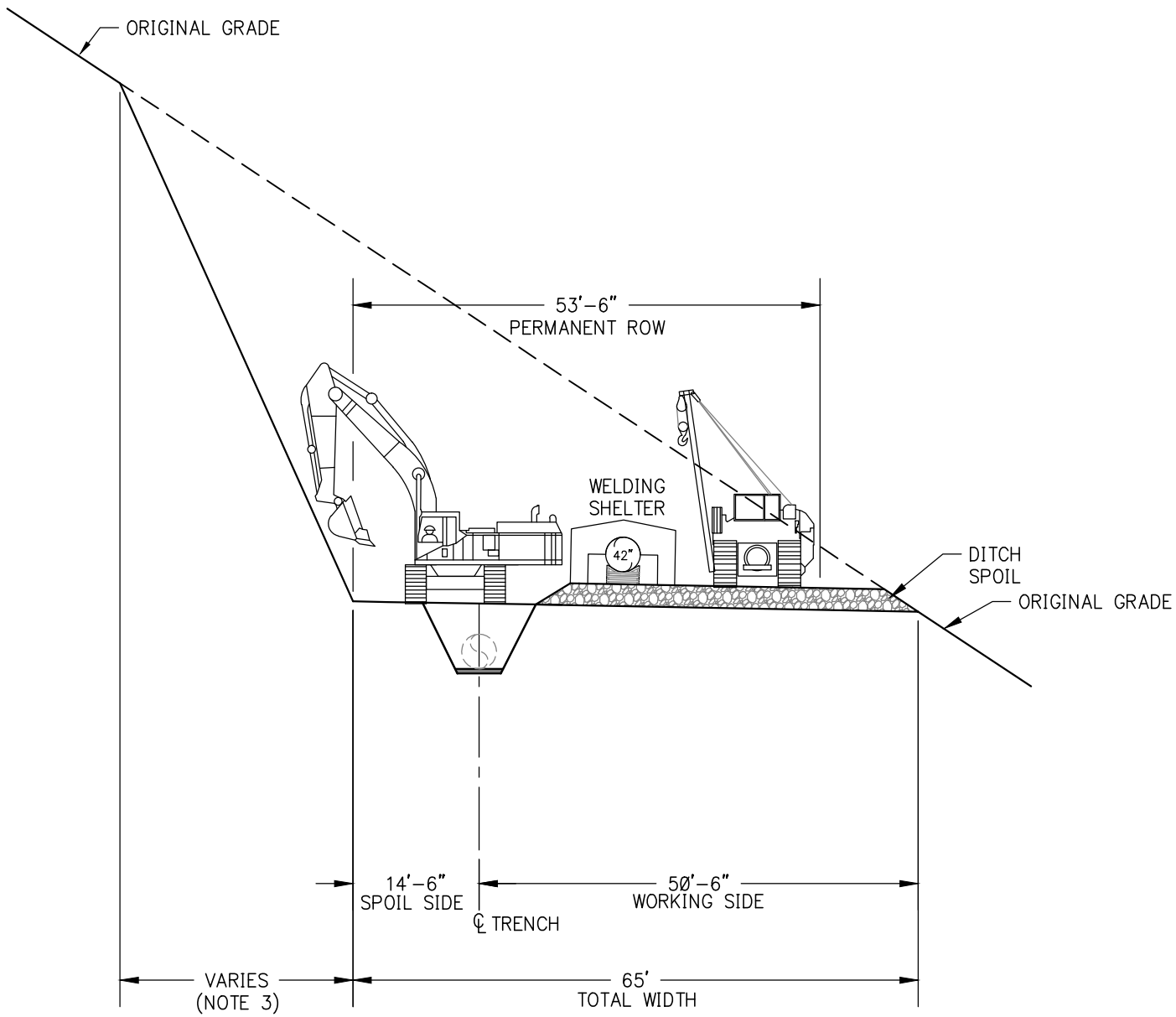

NOTES:

1. ROW CUT MATERIAL TO BE HAULED TO DISPOSAL AREA.
2. CUT SLOPE VARIES WITH TERRAIN AND COMPETENCY OF ROCK.
3. WIDTH OF AREA FOR CUT SLOPE WILL VARY WITH TOPOGRAPHY.

PRELIMINARY & SUBJECT TO CHANGE. ALL DRAWINGS AND DIMENSIONS TYPICAL

DISCLAIMER:

THE INFORMATION CONTAINED HEREIN IS FOR INFORMATIONAL OR PLANNING PURPOSES ONLY. IT DOES NOT NOR SHOULD IT BE DEEMED TO BE AN OFFER, REQUEST OR PROPOSALS FOR RIGHTS OR OCCUPATION OF ANY KIND. THE ALASKA LNG PROJECT PARTICIPANTS AND THEIR RESPECTIVE OFFICERS, EMPLOYEES AND AGENTS, MAKE NO WARRANTY, IMPLIED OR OTHERWISE, NOR ACCEPT ANY LIABILITY, AS TO THE ACCURACY OR COMPLETENESS OF THE INFORMATION CONTAINED IN THESE DOCUMENTS, DRAWINGS OR ELECTRONIC FILES. DO NOT REMOVE OR DELETE THIS NOTE FROM DOCUMENT, DRAWING OR ELECTRONIC FILE.

PREPARED BY:	EXP ENERGY SERVICES INC.		
SCALE:	N.T.S.		
DATE:	2017-04-14	SHEET:	1 OF 1

Attachment B: ROW Mode Distribution by Spread

Spread	ROW Mode	Mode	Mode Miles	Mode %	Wetland Miles	Wetland %
1	Ice Workpad	1	56.57	27.1%	56.57	100.0%
	Frost Pack	2	0.75	0.4%	0.75	100.0%
	Mat	3	0.00	0.0%	0.00	0.0%
	Granular Workpad	4	124.51	59.6%	119.36	95.9%
	Grade	5A	23.98	11.5%	0.00	0.0%
	Mountain Grade	5B	0.00	0.0%	0.00	0.0%
	Stream & Flood Plain	S&FP	3.07	1.5%	3.07	100.1%
1	**Total**		**208.88**	**100.0%**	**179.75**	**86.1%**

Spread	ROW Mode	Mode	Miles	%	Wetland Miles	Wetland %
2	Ice Workpad	1	0.00	0.0%	0.00	0.0%
	Frost Pack	2	2.06	1.1%	2.06	100.0%
	Mat	3	0.01	0.0%	0.01	100.0%
	Granular Workpad	4	139.56	73.0%	97.20	69.6%
	Grade	5A	46.28	24.2%	0.00	0.0%
	Mountain Grade	5B	0.40	0.2%	0.00	0.0%
	Stream & Flood Plain	S&FP	2.87	1.5%	2.87	100.0%
2	**TOTAL**		**191.18**	**100.0%**	**102.14**	**53.4%**

Spread	ROW Mode	Mode	Miles	%	Wetland Miles	Wetland %
3	Ice Workpad	1	0.00	0.0%	0.00	0.0%
	Frost Pack	2	49.28	24.9%	49.28	100.0%
	Mat	3	0.20	0.1%	0.20	100.0%
	Granular Workpad	4	27.14	13.7%	18.34	67.6%
	Grade	5A	117.04	59.2%	0.00	0.0%
	Mountain Grade	5B	0.94	0.5%	0.00	0.0%
	Stream & Flood Plain	S&FP	2.95	1.5%	2.95	100.0%
3	**TOTAL**		**197.55**	**100.0%**	**70.77**	**35.8%**

Spread	ROW Mode	Mode	Miles	%	Wetland Miles	Wetland %
4	Ice Workpad	1	0.00	0.0%	0.00	0.0%
	Frost Pack	2	17.35	10.1%	17.35	100.0%
	Mat	3	0.30	0.2%	0.30	100.0%
	Granular Workpad	4	1.27	0.7%	1.27	100.0%
	Grade	5A	150.91	87.7%	7.47	5.0%
	Mountain Grade	5B	0.00	0.0%	0.00	0.0%
	Stream & Flood Plain	S&FP	2.31	1.3%	2.31	100.0%
4	**TOTAL**		**172.12**	**100.0%**	**28.69**	**16.7%**

Attachment C: Granular Workpad, Permafrost, and Slope Distribution by Spread

Spread	Section	From MP	To MP	Total Miles	Mode 4 Granular Pad Miles	Mode 4 %	Permafrost Miles	Thaw-unstable Miles	Cross Slope Level (0-2%) Miles	Cross Slope Gentle (2-10%) Miles	Cross Slope Steep (>10%) Miles	Longitudinal Slope Level (0-2%) Miles	Longitudinal Slope Gentle (2-10%) Miles	Longitudinal Slope Steep >10%) Miles
1	A	0.00	56.63	56.63	0.00	0.0%	56.63	54.48	55.57	1.23	0.00	55.56	1.22	0.02
	B	56.63	114.74	58.11	57.50	98.9%	58.11	49.23	33.65	21.72	0.93	34.64	20.61	1.06
	C	114.74	166.24	51.50	41.92	81.4%	51.50	24.81	15.77	31.86	5.57	21.17	30.55	1.48
	D	166.24	168.68	2.44	0.00	0.0%	2.44	0.49	0.63	0.79	1.09	0.64	1.62	0.24
	E	168.68	170.25	1.57	0.00	0.0%	1.57	0.20	0.29	0.86	0.45	0.13	0.69	0.75
	F	170.25	177.76	7.51	5.73	76.3%	7.11	1.84	0.70	3.06	4.54	2.14	3.98	2.14
	G	177.76	182.14	4.38	0.00	0.0%	4.18	0.48	0.66	1.78	1.26	1.41	2.14	0.15
	H	182.14	208.88	26.74	19.37	72.4%	26.74	6.35	7.38	9.80	9.72	13.09	12.32	1.49
	Winter			**114.95**	**41.92**	**36.5%**	**114.75**	**80.26**	**72.62**	**35.66**	**7.91**	**78.77**	**35.53**	**1.90**
					36.5%		**99.8%**	**69.8%**	**63.2%**	**31.0%**	**6.9%**	**68.5%**	**30.9%**	**1.7%**
	Summer			**93.93**	**82.59**	**87.9%**	**93.53**	**57.63**	**42.02**	**35.44**	**15.64**	**49.99**	**37.60**	**5.43**
					87.9%		**99.6%**	**61.3%**	**44.7%**	**37.7%**	**16.7%**	**53.2%**	**40.0%**	**5.8%**
	ALL			**208.88**	**124.51**	**59.6%**	**208.28**	**137.88**	**114.65**	**71.10**	**23.56**	**128.77**	**73.13**	**7.33**
					59.6%		**99.7%**	**66.0%**	**54.9%**	**34.0%**	**11.3%**	**61.6%**	**35.0%**	**3.5%**

Spread	Section	From MP	To MP	Total Miles	Mode 4 Granular Pad Miles	Mode 4 %	Permafrost Miles	Thaw-unstable Miles	Cross Slope Level (0-2%) Miles	Cross Slope Gentle (2-10%) Miles	Cross Slope Steep (>10%) Miles	Longitudinal Slope Level (0-2%) Miles	Longitudinal Slope Gentle (2-10%) Miles	Longitudinal Slope Steep >10%) Miles
2	A	208.88	228.86	19.98	15.90	79.6%	19.97	9.94	4.97	10.14	4.89	10.45	8.79	0.76
	B	228.86	241.09	12.23	10.08	82.4%	12.07	7.07	5.45	6.32	0.43	7.72	4.03	0.42
	C	241.09	251.23	10.14	9.40	92.7%	9.85	0.73	3.76	4.70	1.74	4.39	4.97	0.83
	D	251.23	281.44	30.21	28.21	93.4%	29.36	19.19	11.57	15.85	2.88	13.70	15.00	1.61
	E	281.44	314.93	33.49	14.45	43.2%	32.93	5.32	10.03	19.41	4.05	7.61	15.34	10.57
	F	314.93	326.73	11.80	5.46	46.3%	11.80	1.98	2.27	9.35	0.18	2.49	8.28	1.03
	G	326.73	340.33	13.60	12.40	91.2%	13.50	11.72	7.50	5.94	0.16	4.74	7.95	0.91
	H	340.33	347.86	7.53	4.50	59.7%	7.49	1.73	0.97	4.89	1.64	1.93	3.45	2.12
	I	347.86	355.86	8.00	7.93	99.1%	8.40	8.19	3.84	4.53	0.03	5.10	3.01	0.29
	J	355.86	376.44	20.58	14.24	69.2%	18.87	10.26	5.77	11.01	3.42	3.38	9.61	7.22
	K	376.44	382.34	5.90	5.42	91.8%	5.84	5.36	1.62	3.36	0.92	2.19	3.04	0.67
	L	382.34	400.75	18.41	11.57	62.9%	17.87	11.01	3.46	11.70	3.23	2.22	8.15	8.02
	Winter			**56.25**	**48.72**	**86.6%**	**56.13**	**31.28**	**19.63**	**29.06**	**8.01**	**29.86**	**23.84**	**2.97**
					86.6%		**99.8%**	**55.6%**	**34.9%**	**51.7%**	**14.2%**	**53.1%**	**42.4%**	**5.3%**
	Summer			**135.62**	**90.84**	**67.0%**	**131.82**	**61.20**	**41.58**	**78.15**	**15.56**	**36.06**	**67.78**	**31.49**
					67.0%		**97.2%**	**45.1%**	**30.7%**	**57.6%**	**11.5%**	**26.6%**	**50.0%**	**23.2%**
	ALL			**191.87**	**139.56**	**72.7%**	**187.95**	**92.48**	**61.21**	**107.22**	**23.57**	**65.92**	**91.62**	**34.46**
					72.7%		**98.0%**	**48.2%**	**31.9%**	**55.9%**	**12.3%**	**34.4%**	**47.8%**	**18.0%**

Spread	Section	From MP	To MP	Total Miles	Mode 4 Granular Pad Miles	Mode 4 %	Permafrost Miles	Thaw-unstable Miles	Cross Slope Level (0-2%) Miles	Cross Slope Gentle (2-10%) Miles	Cross Slope Steep (>10%) Miles	Longitudinal Slope Level (0-2%) Miles	Longitudinal Slope Gentle (2-10%) Miles	Longitudinal Slope Steep >10%) Miles

3	A	400.75	408.85	8.10	7.93	97.9%	7.94	7.85	3.16	4.22	0.72	5.19	2.74	0.17
	B	408.85	430.40	21.55	2.46	11.4%	1.32	0.82	6.40	11.90	3.24	5.65	11.95	3.95
	C	430.40	473.30	42.90	6.94	16.2%	38.73	36.19	30.02	12.33	0.55	34.35	7.49	1.06
	D	473.30	473.80	0.50	0.00	0.0%	0.00	0.00	0.48	0.02	0.00	0.43	0.07	0.00
	E	473.80	489.40	16.10	2.74	17.0%	14.78	6.72	14.71	1.39	0.00	15.07	1.03	0.00
	F	489.40	498.60	9.20	0.00	0.0%	8.15	0.00	9.14	0.06	0.00	9.05	0.14	0.01
	G	498.60	520.84	22.24	0.00	0.0%	16.18	3.02	16.03	5.23	0.98	17.96	3.80	0.48
	H	520.84	531.97	11.13	2.48	22.3%	6.93	2.07	4.16	5.42	1.55	5.67	4.90	0.56
	I	531.97	535.23	3.26	0.00	0.0%	0.00	0.00	0.09	0.61	2.56	0.83	1.34	1.09
	J	535.23	538.90	3.67	0.00	0.0%	0.64	0.00	0.07	0.60	3.01	0.88	1.32	1.47
	K	538.90	543.08	4.18	0.00	0.0%	3.74	0.25	0.55	1.76	1.88	1.17	2.32	0.69
	L1	543.08	567.00	23.92	4.19	17.5%	16.34	0.43	9.22	9.98	4.72	11.62	9.70	2.60
	L2	567.00	607.50	40.50	0.40	1.0%	24.46	0.00	10.95	22.44	7.11	17.85	19.05	3.60
	Winter			**120.59**	**20.07**	**16.6%**	**87.10**	**54.60**	**79.95**	**35.15**	**5.49**	**87.70**	**27.22**	**5.67**
					16.6%		**72.2%**	**45.3%**	**66.3%**	**29.1%**	**4.6%**	**72.7%**	**22.6%**	**4.7%**
	Summer			**86.66**	**7.08**	**8.2%**	**52.11**	**2.75**	**25.04**	**40.80**	**20.82**	**38.02**	**38.63**	**10.01**
					8.2%		**60.1%**	**3.2%**	**28.9%**	**47.1%**	**24.0%**	**43.9%**	**44.6%**	**11.5%**
	ALL			**207.25**	**27.14**	**13.1%**	**139.21**	**57.35**	**104.99**	**75.95**	**26.31**	**125.72**	**65.85**	**15.68**
					13.1%		**67.2%**	**27.7%**	**50.7%**	**36.6%**	**12.7%**	**60.7%**	**31.8%**	**7.6%**
				608.00			**535.44**	**287.71**						

Spread	Section	From MP	To MP	Total Miles	Mode 4 Granular Pad Miles	Mode 4 %	Permafrost Miles	Thaw-unstable Miles	Cross Slope Level (0-2%) Miles	Cross Slope Gentle (2-10%) Miles	Cross Slope Steep (>10%) Miles	Longitudinal Slope Level (0-2%) Miles	Longitudinal Slope Gentle (2-10%) Miles	Longitudinal Slope Steep >10%) Miles
4	A	607.50	666.00	58.50	0.32	0.6%	6.34	0.00	15.80	32.41	10.30	25.89	27.64	4.97
	B	666.00	704.00	38.00	0.00	0.0%	0.81	0.81	18.05	18.81	1.14	23.18	13.38	1.44
	C	704.00	741.00	37.00	0.94	2.6%	0.00	0.00	28.68	8.18	0.15	27.79	8.14	1.07
	D	741.00	766.30	25.30	0.00	0.0%	0.00	0.00	12.47	10.83	2.00	15.08	8.78	1.44
	E	793.40	806.72	13.32	0.00	0.0%	0.00	0.00	4.50	6.97	1.85	4.16	6.13	3.04
	Winter			**75.00**	**0.94**	**1.3%**	**0.81**	**0.81**	**46.73**	**26.99**	**1.29**	**50.97**	**21.52**	**2.52**
					1.3%		**1.1%**	**1.1%**	**62.3%**	**36.0%**	**1.7%**	**68.0%**	**28.7%**	**3.4%**
	Summer			**97.12**	**0.32**	**0.3%**	**6.34**	**0.00**	**32.77**	**50.20**	**14.15**	**45.12**	**42.55**	**9.45**
					0.3%		**6.5%**	**0.0%**	**33.7%**	**51.7%**	**14.6%**	**46.5%**	**43.8%**	**9.7%**
	ALL			**172.12**	**1.27**	**0.7%**	7.15	0.81	79.50	77.19	15.43	96.09	64.07	11.97
					0.7%		**4.2%**	**0.5%**	**46.2%**	**44.8%**	**9.0%**	**55.8%**	**37.2%**	**7.0%**

ALL	Winter			366.79	111.65	30.4%	258.80	166.95	218.93	126.86	22.71	247.30	108.11	13.05
	Summer			413.33	180.83	43.7%	283.80	121.57	141.41	204.60	66.17	169.20	186.56	56.38
	ALL			**780.12**	**292.48**	**37.5%**	**542.60**	**288.52**	**360.34**	**331.46**	**88.88**	**416.50**	**294.66**	**69.44**

SPREADS 1 - 3	**Winter**			291.79	110.71	37.9%	257.98	166.14	172.21	99.87	21.42	196.33	86.59	10.54
	Summer			316.21	180.51	57.1%	277.46	121.57	108.64	154.40	52.02	124.08	144.01	46.93
	ALL			**608.00**	**291.22**	**47.9%**	**535.44**	**287.71**	**280.85**	**254.26**	**73.44**	**320.41**	**230.60**	**57.47**

Attachment D: ROW Mode and Wetland Distribution by Spread

Spread	Section	Pipe Lay Season	From MP	To MP	Total Miles	Wetlands	Uplands	Disturbed	Permafrost Miles	Thaw-unstable Miles	Mode 1 - Ice Workpad (miles)	Mode 2 - Frost Pack (miles)	Mode 3 - Timber Mats	Mode 4 - Granular Workpad	Mode 5A - Grade	Mode 5B - Mountain Grade
1	A	W1	0.00	56.63	56.63	54.53	2.05	0.05	56.63	54.48	56.57	0.00	0.00	0.00	0.00	0.00
	B	S1.5	56.63	114.74	58.11	55.34	2.73	0.03	58.11	49.23	0.00	0.00	0.00	57.49	0.00	0.00
	C	W2	114.74	166.24	51.5	44.0	7.1	0.4	51.50	24.81	0.00	0.75	0.00	41.92	7.56	0.00
	D	W2	166.24	168.68	2.6	2.2	0.2	0.2	2.44	0.49	0.00	0.00	0.00	0.00	2.55	0.00
	E	S2.5	168.68	170.25	1.49	0.13	0.87	0.48	1.57	0.20	0.00	0.00	0.00	0.00	1.47	0.00
	F	S2.5	170.25	177.76	7.49	3.63	3.66	0.21	7.11	1.84	0.00	0.00	0.00	5.31	1.89	0.00
	G	W2	177.76	182.14	4.3	3.2	1.1	0.0	4.18	0.48	0.00	0.00	0.00	0.00	4.35	0.00
	H	S2.5	182.14	208.88	26.78	16.61	10.02	0.14	26.74	6.35	0.00	0.02	0.05	18.76	7.14	0.00
	Winter				**115.03**	**104.04**	**10.38**	**0.62**	**114.75**	**80.26**	**56.57**	**0.75**	**0.00**	**41.92**	**14.46**	**0.00**
					100.0%	90.4%	9.0%	0.5%	99.8%	69.8%	49.2%	0.7%	0.0%	36.4%	12.6%	0.0%
	Summer				**93.86**	**75.71**	**17.29**	**0.87**	**93.53**	**57.63**	**0.00**	**0.02**	**0.05**	**81.56**	**10.50**	**0.00**
					100.0%	80.7%	18.4%	0.9%	99.6%	61.4%	0.0%	0.0%	0.0%	86.9%	11.2%	0.0%
	Total				**208.89**	**179.75**	**27.66**	**1.48**	**208.28**	**137.88**	**56.57**	**0.77**	**0.05**	**123.48**	**24.96**	**0.00**
					100.0%	86.0%	13.2%	0.7%	99.7%	66.0%	27.1%	0.4%	0.0%	59.1%	11.9%	0.0%

Spread	Section	Pipe Lay Season	From MP	To MP	Total Miles	Wetlands	Uplands	Disturbed	Permafrost Miles	Thaw-unstable Miles	Mode 1 - Ice Workpad (miles)	Mode 2 - Frost Pack (miles)	Mode 3 - Timber Mats	Mode 4 - Granular Workpad	Mode 5A - Grade	Mode 5B - Mountain Grade
2	A	W1	208.88	228.86	20.0	13.8	6.1	0.0	19.97	9.94	0.00	2.04	0.00	15.90	1.32	0.00
	B	W1	228.86	241.09	12.2	8.4	3.8	0.0	12.07	7.07	0.00	0.00	0.00	10.08	1.97	0.00
	C	W1	241.09	251.23	10.1	7.7	2.4	0.0	9.85	0.73	0.00	0.00	0.00	9.40	0.56	0.00
	D	S1.5	251.23	281.44	30.2	27.1	3.0	0.2	29.36	19.19	0.00	0.00	0.00	28.21	1.33	0.00
	E	S1.5	281.44	314.93	33.5	18.9	14.5	0.1	32.93	5.32	0.00	0.00	0.01	14.44	18.37	0.40
	F	S1.5	314.93	326.73	11.8	7.9	4.0	0.0	11.80	1.98	0.00	0.00	0.00	5.51	6.19	0.00
	G	S1.5	326.73	340.33	13.6	4.4	9.2	0.0	13.50	11.72	0.00	0.00	0.00	12.37	1.13	0.00
	H	S1.5	340.33	347.86	7.5	1.5	5.9	0.0	7.49	1.73	0.00	0.00	0.00	4.48	2.88	0.07
	I	W2	347.86	355.86	8.0	2.5	5.5	0.0	8.40	8.19	0.00	0.00	0.00	7.95	0.00	0.00
	J	S2.5	355.86	376.44	20.6	4.8	15.6	0.2	18.87	10.26	0.00	0.00	0.00	14.24	5.72	0.00
	K	W2	376.44	382.34	5.9	1.4	4.5	0.0	5.84	5.36	0.00	0.00	0.00	5.39	0.00	0.00
	L	S2.5	382.34	400.75	18.4	3.8	14.5	0.1	17.87	11.01	0.00	0.00	0.00	11.56	6.72	0.00
	Winter				**56.23**	**33.80**	**22.25**	**0.18**	**56.13**	**31.28**	**0.00**	**2.04**	**0.00**	**48.73**	**3.85**	**0.00**
					100.0%	60.1%	39.6%	0.3%	**99.8%**	**55.6%**	0.0%	3.6%	0.0%	86.7%	6.9%	0.0%
	Summer				**135.59**	**68.33**	**66.69**	**0.57**	**131.82**	**61.20**	**0.00**	**0.00**	**0.01**	**90.81**	**42.36**	**0.47**
					100.0%	50.4%	49.2%	0.4%	97.2%	45.1%	0.0%	0.0%	0.0%	67.0%	31.2%	0.3%
	Total				**191.83**	**102.14**	**88.94**	**0.75**	**187.95**	**92.48**	**0.00**	**2.04**	**0.01**	**139.53**	**46.21**	**0.47**
					100.0%	53.2%	46.4%	0.4%	98.0%	48.2%	0.0%	1.1%	0.0%	72.7%	24.1%	0.2%

Spread	Section	Pipe Lay Season	From MP	To MP	Total Miles	Wetlands	Uplands	Disturbed	Permafrost Miles	Thaw-unstable Miles	Mode 1 - Ice Workpad (miles)	Mode 2 - Frost Pack (miles)	Mode 3 - Timber Mats	Mode 4 - Granular Workpad	Mode 5A - Grade	Mode 5B - Mountain Grade

3	A	W1	400.75	408.85	8.1	3.7	4.4	0.0	7.94	7.85	0.00	0.00	0.00	7.94	0.00	0.00
	B	W1	408.85	430.40	21.6	0.9	20.7	0.0	1.32	0.82	0.00	0.00	0.00	2.49	19.09	0.00
	C	W1	430.40	473.30	42.9	17.7	24.9	0.2	38.73	36.19	0.00	30.65	0.00	6.95	4.35	0.00
	D	W2	473.30	473.80	0.5	0.0	0.4	0.0	0.00	0.00	0.00	0.00	0.00	0.46	0.00	0.00
	E	W2	473.80	489.40	15.6	7.3	8.3	0.0	14.78	6.72	0.00	0.00	0.00	2.24	13.15	0.00
	F	W2	489.40	498.60	9.2	1.5	7.7	0.0	8.15	0.00	0.00	0.00	0.00	0.00	9.20	0.00
	G	W2	498.60	520.84	22.2	17.7	4.5	0.0	16.18	3.02	0.00	18.62	0.00	0.00	3.50	0.00
	H	S1.5	520.84	531.97	11.2	4.4	6.7	0.1	6.93	2.07	0.00	0.00	0.00	2.48	8.47	0.00
	I	S1.5	531.97	535.23	3.2	0.0	3.0	0.2	0.00	0.00	0.00	0.00	0.00	0.00	2.83	0.00
	J	S1.5	535.23	538.90	3.6	0.4	3.2	0.1	0.64	0.00	0.00	0.00	0.00	0.00	2.59	0.94
	K	S1.5	538.90	543.08	4.2	1.8	2.5	0.0	3.74	0.25	0.00	0.00	0.00	0.00	4.11	0.00
	L1	S1.5	543.08	567.00	24.0	7.9	16.0	0.1	16.34	0.43	0.00	0.00	0.01	4.19	19.57	0.00
	L2	S2.5	567.00	607.50	40.2	7.3	32.8	0.1	24.46	0.00	0.00	0.00	0.19	0.40	39.30	0.00
	Winter				**120.10**	**48.91**	**70.93**	**0.27**	**87.10**	**54.60**	**0.00**	**49.27**	**0.00**	**20.08**	**49.30**	**0.00**
					100.0%	40.7%	59.1%	0.2%	**72.5%**	**45.5%**	0.0%	41.0%	0.0%	16.7%	41.0%	0.0%
	Summer				**86.54**	**21.86**	**64.10**	**0.57**	**52.11**	**2.75**	**0.00**	**0.00**	**0.20**	**7.08**	**76.87**	**0.94**
					100.0%	25.3%	74.1%	0.7%	60.2%	3.2%	0.0%	0.0%	0.2%	8.2%	88.8%	1.1%
	Total				**206.64**	**70.77**	**135.03**	**0.84**	**139.21**	**57.35**	**0.00**	**49.27**	**0.20**	**27.16**	**126.17**	**0.94**
					100.0%	34.2%	65.3%	0.4%	67.4%	27.8%	0.0%	23.8%	0.1%	13.1%	61.1%	0.5%

Spread	Section	Pipe Lay Season	From MP	To MP	Total Miles	Wetlands	Uplands	Disturbed	Permafrost Miles	Thaw-unstable Miles	Mode 1 - Ice Workpad	Mode 2 - Frost Pack	Mode 3 - Timber Mats	Mode 4 - Granular Workpad	Mode 5A - Grade	Mode 5B - Mountain Grade
4	A	S1.5	607.50	666.00	58.5	6.0	52.2	0.3	6.34	0.00	0.00	0.00	0.30	0.32	57.13	0.00
	B	W1	666.00	704.00	37.7	7.8	29.9	0.0	0.81	0.81	0.00	12.90	0.00	0.00	24.66	0.00
	C	W2	704.00	741.00	37.5	9.4	28.0	0.0	0.00	0.00	0.00	4.45	0.00	0.94	31.26	0.00
	D	S2.5	741.00	766.30	25.0	5.3	19.7	0.0	0.00	0.00	0.00	0.00	0.00	0.00	24.49	0.00
	E	S2.5	793.40	806.72	13.3	0.1	12.9	0.3	0.00	0.00	0.00	0.00	0.00	0.00	12.35	0.86
	Winter				**75.17**	**17.26**	**57.91**	**0.00**	**0.81**	**0.81**	**0.00**	**17.35**	**0.00**	**0.94**	**55.92**	**0.00**
					100.0%	23.0%	77.0%	0.0%	**1.1%**	**1.1%**	0.0%	23.1%	0.0%	1.3%	74.4%	0.0%
	Summer				**96.79**	**11.43**	**84.73**	**0.64**	**6.34**	**0.00**	**0.00**	**0.00**	**0.30**	**0.32**	**93.97**	**0.86**
					100.0%	11.8%	87.5%	0.7%	**6.6%**	**0.0%**	0.0%	0.0%	0.3%	0.3%	97.1%	0.9%
	Total				**171.96**	**28.69**	**142.64**	**0.64**	**7.15**	**0.81**	**0.00**	**17.35**	**0.30**	**1.27**	**149.89**	**0.86**
					100.0%	16.7%	82.9%	0.4%	4.2%	0.5%	0.0%	10.1%	0.2%	0.7%	87.2%	0.5%

Attachment E: Mile by Mile ROW Mode and Wetland Distribution

SPREAD	SECTION	ROW MODE	FROM MP	TO MP	NWI CODE	HGM CLASS	VIERECK	DESCRIPTION	LINEAR FEET	WETLAND FEET	UPLAND FEET	DISTURBED FEET	Comments	Mode 1 - Ice Workpad (miles)	Mode 2 - Frost Pack (miles)	Mode 3 - Timber Mats	Mode 4 - Granular Workpad	Mode 5A - Grade	Mode 5B - Mountain Grade	Stream & Flood Plain Crossings
1	A	1	0.00	0.05	PEM1/SS1B	FLAT - ORGANIC	III A 2, II D	WETLAND	283	283				0.05						
1	A	1	0.05	0.10	PEM1E	FLAT - ORGANIC	III A 3	WETLAND	220	220				0.04						
1	A	1	0.10	0.30	PEM1/SS1B	FLAT - ORGANIC	III A 2, II D	WETLAND	1065	1065				0.20						
1	A	1	0.30	0.30	D	N/A	NONE	DISTURBED	32			32	Granular fill pipeline pad c	0.01						
1	A	1	0.30	0.54	PEM1/SS1B	FLAT - ORGANIC	III A 2, II D 2	WETLAND	1232	1232				0.23						
1	A	1	0.54	0.58	PEM1C	FLAT - ORGANIC	III A 2, II D	WETLAND	221	221				0.04						
1	A	1	0.58	0.60	PEM1E	SLOPE	III A 3	WETLAND	91	91				0.02						
1	A	1	0.60	0.80	PEM1C	FLAT - ORGANIC	III A 2, II D	WETLAND	1087	1087				0.21						
1	A	1	0.80	1.35	PEM1/SS1B	FLAT - ORGANIC	III A 2, II D 2	WETLAND	2918	2918				0.55						
1	A	1	1.35	1.37	PEM1F	SLOPE	III A 3	WETLAND	64	64				0.01						
1	A	1	1.37	1.50	PEM1/SS1B	FLAT - ORGANIC	III A 2, II D 2	WETLAND	718	718				0.14						
1	A	1	1.50	1.60	U	N/A	III A 2, II D 3	UPLAND	509		509		Dry' patch in polygonal gro	0.10						
1	A	1	1.60	1.65	PEM1/SS1B	FLAT - ORGANIC	III A 2, II D 2	WETLAND	299	299				0.06						
1	A	1	1.65	1.71	U	N/A	III A 2, II D 3	UPLAND	310		310		Dry' patch in polygonal gro	0.06						
1	A	1	1.71	2.54	PEM1/SS1B	FLAT - ORGANIC	III A 2, II D 2	WETLAND	4365	4365				0.83						
1	A	1	2.54	2.55	D	N/A	NONE	DISTURBED	61			61	Granular fill road crossing	0.01						
1	A	1	2.55	2.69	PEM1/SS1B	FLAT - ORGANIC	III A 2, II D	WETLAND	740	740				0.14						
1	A	1	2.69	2.70	D	N/A	NONE	DISTURBED	43			43	Granular fill pipeline pad c	0.01						
1	A	1	2.70	3.04	PEM1/SS1B	FLAT - ORGANIC	III A 2, II D	WETLAND	1813	1813				0.34						
1	A	1	3.04	3.08	PEM1C	FLAT - ORGANIC	III A 2	WETLAND	211	211				0.04						
1	A	1	3.08	3.20	PEM1/SS1B	FLAT - ORGANIC	III A 2, II D	WETLAND	640	640				0.12						
1	A	WB-W	3.20	3.21	PEM1/SS1B	FLAT - ORGANIC	III A 2, II D	WETLAND	10	10										0.002
1	A	WB-W	3.21	3.24	R2USC	RIVERINE	NONE	WETLAND	167	167										0.03
1	A	WB-W	3.24	3.25	R2UBH	RIVERINE	NONE	WETLAND	45	45										0.01
1	A	WB-W	3.25	3.25	R2USC	RIVERINE	NONE	WETLAND	43	43										0.01
1	A	WB-W	3.25	3.27	U	N/A	III A 1	UPLAND	65		65		Put River south bank							0.01
1	A	1	3.27	3.27	U	N/A	III A 1	UPLAND	29		29		Put River south bank	0.01						
1	A	1	3.27	3.36	PEM1/SS1B	FLAT - ORGANIC	III A 2, II D	WETLAND	445	445				0.08						
1	A	1	3.36	3.39	U	N/A	III A 2, II D 3	UPLAND	168		168		Dry' patch in polygonal gro	0.03						
1	A	1	3.39	3.64	PEM1/SS1B	FLAT - ORGANIC	III A 2, II D	WETLAND	1306	1306				0.25						
1	A	1	3.64	3.69	U	N/A	III A 2, II D 3	UPLAND	274		274		Dry' patch in polygonal gro	0.05						
1	A	1	3.69	3.69	PEM1/SS1B	FLAT - ORGANIC	III A 2, II D	WETLAND	9	9				0.00						
1	A	1	3.69	3.70	U	N/A	III A 2, II D 3	UPLAND	74		74			0.01						
1	A	1	3.70	4.19	PEM1/SS1B	FLAT - ORGANIC	III A 2, II D	WETLAND	2594	2594				0.49						
1	A	1	4.19	4.20	PEM1/SS1F	DEPRESSIONAL	III A 3, II D	WETLAND	37	37				0.01						
1	A	1	4.20	4.52	PEM1/SS1B	FLAT - ORGANIC	III A 2, II D	WETLAND	1656	1656				0.31						
1	A	1	4.52	4.52	D	N/A	NONE	DISTURBED	42			42	Granular fill pipeline pad c	0.01						
1	A	1	4.52	4.59	PEM1/SS1B	FLAT - ORGANIC	III A 2, II D	WETLAND	378	378				0.07						
1	A	1	4.59	4.60	D	N/A	NONE	DISTURBED	51			51	Granular fill road crossing	0.01						
1	A	1	4.60	4.79	PEM1/SS1B	FLAT - ORGANIC	III A 2, II D	WETLAND	980	980				0.19						
1	A	1	4.79	4.80	D	N/A	NONE	DISTURBED	37			37	Granular fill pipeline pad c	0.01						
1	A	1	4.80	4.88	PEM1/SS1B	FLAT - ORGANIC	III A 2, II D	WETLAND	454	454				0.09						
1	A	1	4.88	4.89	PUBH	DEPRESSIONAL	NONE	WETLAND	32	32				0.01						
1	A	1	4.89	5.28	PEM1/SS1B	FLAT - ORGANIC	III A 2, II D	WETLAND	2048	2048				0.39						
1	A	1	5.28	5.88	PEM1B	FLAT - ORGANIC	III A 2	WETLAND	3206	3206				0.61						
1	A	1	5.88	6.24	PEM1E	FLAT - ORGANIC	III A 2	WETLAND	1854	1854				0.35						
1	A	1	6.24	6.63	PEM1/SS1B	FLAT - ORGANIC	III A 2, II D	WETLAND	2085	2085				0.39						
1	A	1	6.63	6.69	PEM1F	FLAT - ORGANIC	III A 3	WETLAND	295	295				0.06						
1	A	1	6.69	6.74	PEM1/SS1B	FLAT - ORGANIC	III A 2, II D	WETLAND	300	300				0.06						
1	A	1	6.74	6.77	PUBF	DEPRESSIONAL	NONE	WETLAND	138	138				0.03						
1	A	1	6.77	7.25	PEM1/SS1B	FLAT - ORGANIC	III A 2, II D	WETLAND	2530	2530				0.48						
1	A	1	7.25	7.78	PEM1F	FLAT - ORGANIC	III A 3	WETLAND	2796	2796				0.53						
1	A	1	7.78	7.83	PEM1/SS1E	FLAT - ORGANIC	III A 3, II D	WETLAND	259	259				0.05						
1	A	1	7.83	7.89	PEM1/SS1B	FLAT - ORGANIC	III A 2, II D	WETLAND	343	343				0.06						
1	A	1	7.89	7.92	PEM1/SS1E	FLAT - ORGANIC	III A 3, II D	WETLAND	138	138				0.03						
1	A	1	7.92	7.94	PEM1F	DEPRESSIONAL	III A 3	WETLAND	106	106				0.02						
1	A	1	7.94	8.17	PEM1/SS1E	FLAT - ORGANIC	III A 3, II D	WETLAND	1235	1235				0.23						
1	A	1	8.17	8.40	PEM1/SS1B	FLAT - ORGANIC	III A 2, II D	WETLAND	1200	1200				0.23						
1	A	1	8.40	8.53	PEM1/SS1E	FLAT - ORGANIC	III A 3, II D	WETLAND	712	712				0.13						
1	A	1	8.53	8.56	PEM1/SS1B	FLAT - ORGANIC	III A 2, II D	WETLAND	130	130				0.02						
1	A	1	8.56	8.60	PEM1/SS1E	FLAT - ORGANIC	III A 3, II D	WETLAND	241	241				0.05						
1	A	1	8.60	8.68	PEM1/SS1B	FLAT - ORGANIC	III A 2, II D	WETLAND	417	417				0.08						
1	A	1	8.68	8.71	PEM1/SS1E	FLAT - ORGANIC	III A 3, II D	WETLAND	146	146				0.03						
1	A	1	8.71	8.76	PEM1/SS1B	FLAT - ORGANIC	III A 2, II D	WETLAND	255	255				0.05						
1	A	1	8.76	8.97	PEM1/SS1E	FLAT - ORGANIC	III A 3, II D	WETLAND	1115	1115				0.21						
1	A	1	8.97	8.98	PUBH	DEPRESSIONAL	NONE	WETLAND	73	73				0.01						
1	A	1	8.98	9.13	PEM1/SS1B	FLAT - ORGANIC	III A 2, II D	WETLAND	752	752				0.14						
1	A	1	9.13	9.16	PEM1/SS1E	FLAT - ORGANIC	III A 3, II D 3	WETLAND	163	163				0.03						
1	A	1	9.16	9.19	PEM1/SS1B	FLAT - ORGANIC	III A 2, II D	WETLAND	181	181				0.03						
1	A	1	9.19	9.21	PEM1/SS1E	FLAT - ORGANIC	III A 3, II D 3	WETLAND	95	95				0.02						
1	A	1	9.21	9.24	PEM1/SS1B	FLAT - ORGANIC	III A 2, II D	WETLAND	136	136				0.03						
1	A	1	9.24	9.26	PEM1/SS1E	FLAT - ORGANIC	III A 3, II D 3	WETLAND	119	119				0.02						

SPREAD	SECTION	ROW MODE	FROM MP	TO MP	NWI CODE	HGM CLASS	VIERECK	DESCRIPTION	LINEAR FEET	WETLAND FEET	UPLAND FEET	DISTURBED FEET	Comments	Mode 1 - Ice Workpad (miles)	Mode 2 - Frost Pack (miles)	Mode 3 - Timber Mats	Mode 4 - Granular Workpad	Mode 5A - Grade	Mode 5B - Mountain Grade	Stream & Flood Plain Crossings
1	A	1	9.26	9.34	PEM1/SS1B	FLAT - ORGANIC	III A 2, II D	WETLAND	414	414				0.08						
1	A	1	9.34	9.47	PEM1/SS1E	FLAT - ORGANIC	III A 3, II D 3	WETLAND	715	715				0.14						
1	A	1	9.47	9.56	PEM1/SS1B	FLAT - ORGANIC	III A 2, II D	WETLAND	439	439				0.08						
1	A	1	9.56	10.03	PEM1/SS1E	FLAT - ORGANIC	III A 3, II D 3	WETLAND	2495	2495				0.47						
1	A	1	10.03	10.06	PUBH	DEPRESSIONAL	NONE	WETLAND	186	186				0.04						
1	A	1	10.06	10.19	PEM1/SS1E	FLAT - ORGANIC	III A 3, II D 3	WETLAND	658	658				0.12						
1	A	1	10.19	10.21	PUBH	DEPRESSIONAL	NONE	WETLAND	129	129				0.02						
1	A	1	10.21	10.27	PEM1/SS1E	FLAT - ORGANIC	III A 3, II D 3	WETLAND	324	324				0.06						
1	A	1	10.27	10.29	PUBH	DEPRESSIONAL	NONE	WETLAND	110	110				0.02						
1	A	1	10.29	10.53	PEM1/SS1E	FLAT - ORGANIC	III A 3, II D 3	WETLAND	1248	1248				0.24						
1	A	1	10.53	10.55	PEM1F	DEPRESSIONAL	III A 3	WETLAND	99	99				0.02						
1	A	1	10.55	12.21	PEM1/SS1E	FLAT - ORGANIC	III A 3, II D 3	WETLAND	8742	8742				1.66						
1	A	1	12.21	12.24	PUBH	DEPRESSIONAL	NONE	WETLAND	188	188				0.04						
1	A	1	12.24	12.34	PEM1/SS1E	FLAT - ORGANIC	III A 3, II D 3	WETLAND	545	545				0.10						
1	A	1	12.34	12.37	PUBH	DEPRESSIONAL	NONE	WETLAND	132	132				0.03						
1	A	1	12.37	12.50	PEM1/SS1E	FLAT - ORGANIC	III A 3, II D 3	WETLAND	696	696				0.13						
1	A	1	12.50	12.52	PUBH	DEPRESSIONAL	NONE	WETLAND	108	108				0.02						
1	A	1	12.52	13.28	PEM1/SS1E	FLAT - ORGANIC	III A 3, II D 3	WETLAND	3989	3989				0.76						
1	A	1	13.28	13.30	PUBH	DEPRESSIONAL	NONE	WETLAND	101	101				0.02						
1	A	1	13.30	13.65	PEM1/SS1E	FLAT - ORGANIC	III A 3, II D 3	WETLAND	1850	1850				0.35						
1	A	1	13.65	13.72	PUBH	DEPRESSIONAL	NONE	WETLAND	395	395				0.07						
1	A	1	13.72	13.76	PEM1/SS1E	FLAT - ORGANIC	III A 3, II D 3	WETLAND	181	181				0.03						
1	A	1	13.76	13.79	PUBH	DEPRESSIONAL	NONE	WETLAND	176	176				0.03						
1	A	1	13.79	14.04	PEM1/SS1E	FLAT - ORGANIC	III A 3, II D 3	WETLAND	1343	1343				0.25						
1	A	1	14.04	14.09	PUBH	DEPRESSIONAL	NONE	WETLAND	229	229				0.04						
1	A	1	14.09	14.15	PEM1/SS1E	FLAT - ORGANIC	III A 3, II D 3	WETLAND	332	332				0.06						
1	A	1	14.15	14.16	PEM1F	DEPRESSIONAL	III A 3	WETLAND	49	49				0.01						
1	A	1	14.16	14.24	PEM1/SS1E	FLAT - ORGANIC	III A 3, II D 3	WETLAND	407	407				0.08						
1	A	1	14.24	14.29	PUBH	DEPRESSIONAL	NONE	WETLAND	301	301				0.06						
1	A	1	14.29	14.34	PEM1/SS1E	FLAT - ORGANIC	III A 3, II D 3	WETLAND	255	255				0.05						
1	A	1	14.34	14.37	PUBH	DEPRESSIONAL	NONE	WETLAND	149	149				0.03						
1	A	1	14.37	14.37	PEM1/SS1E	FLAT - ORGANIC	III A 3, II D 3	WETLAND	16	16				0.00						
1	A	1	14.37	14.40	PUBH	DEPRESSIONAL	NONE	WETLAND	142	142				0.03						
1	A	1	14.40	14.50	PEM1/SS1E	FLAT - ORGANIC	III A 3, II D 3	WETLAND	536	536				0.10						
1	A	1	14.50	14.53	PUBH	DEPRESSIONAL	NONE	WETLAND	140	140				0.03						
1	A	1	14.53	15.56	PEM1/SS1E	FLAT - ORGANIC	III A 3, II D 3	WETLAND	5439	5439				1.03						
1	A	1	15.56	15.62	PUBH	DEPRESSIONAL	NONE	WETLAND	324	324				0.06						
1	A	1	15.62	15.79	PEM1/SS1E	FLAT - ORGANIC	III A 3, II D 3	WETLAND	892	892				0.17						
1	A	1	15.79	15.82	PUBH	DEPRESSIONAL	NONE	WETLAND	186	186				0.04						
1	A	1	15.82	15.86	PEM1/SS1E	FLAT - ORGANIC	III A 3, II D 3	WETLAND	179	179				0.03						
1	A	1	15.86	15.88	PUBH	DEPRESSIONAL	NONE	WETLAND	113	113				0.02						
1	A	1	15.88	16.09	PEM1/SS1E	FLAT - ORGANIC	III A 3, II D 3	WETLAND	1137	1137				0.22						
1	A	1	16.09	16.10	PUBH	DEPRESSIONAL	NONE	WETLAND	31	31				0.01						
1	A	1	16.10	16.11	PEM1/SS1E	FLAT - ORGANIC	III A 3, II D 3	WETLAND	63	63				0.01						
1	A	1	16.11	16.15	PUBH	DEPRESSIONAL	NONE	WETLAND	210	210				0.04						
1	A	1	16.15	16.32	PEM1/SS1E	FLAT - ORGANIC	III A 3, II D 3	WETLAND	890	890				0.17						
1	A	1	16.32	16.35	PUBH	DEPRESSIONAL	NONE	WETLAND	177	177				0.03						
1	A	1	16.35	16.39	PEM1/SS1E	FLAT - ORGANIC	III A 3, II D 3	WETLAND	212	212				0.04						
1	A	1	16.39	16.42	PUBH	DEPRESSIONAL	NONE	WETLAND	119	119				0.02						
1	A	1	16.42	16.59	PEM1/SS1E	FLAT - ORGANIC	III A 3, II D 3	WETLAND	930	930				0.18						
1	A	1	16.59	16.65	PUBH	DEPRESSIONAL	NONE	WETLAND	297	297				0.06						
1	A	1	16.65	16.67	PEM1/SS1E	FLAT - ORGANIC	III A 3, II D 3	WETLAND	95	95				0.02						
1	A	1	16.67	16.70	PUBH	DEPRESSIONAL	NONE	WETLAND	178	178				0.03						
1	A	1	16.70	16.75	PEM1/SS1E	FLAT - ORGANIC	III A 3, II D 3	WETLAND	262	262				0.05						
1	A	1	16.75	16.79	PUBH	DEPRESSIONAL	NONE	WETLAND	209	209				0.04						
1	A	1	16.79	17.72	PEM1/SS1E	FLAT - ORGANIC	III A 3, II D 3	WETLAND	4935	4935				0.93						
1	A	1	17.72	17.75	PEM1F	DEPRESSIONAL	III A 3	WETLAND	149	149				0.03						
1	A	1	17.75	17.76	PEM1/SS1E	FLAT - ORGANIC	III A 3, II D 3	WETLAND	42	42				0.01						
1	A	1	17.76	17.77	PEM1F	DEPRESSIONAL	III A 3	WETLAND	37	37				0.01						
1	A	1	17.77	18.57	PEM1/SS1E	FLAT - ORGANIC	III A 3, II D 3	WETLAND	4227	4227				0.80						
1	A	1	18.57	18.62	PEM1F	DEPRESSIONAL	III A 3	WETLAND	292	292				0.06						
1	A	1	18.62	18.64	PEM1/SS1E	FLAT - ORGANIC	III A 3, II D 3	WETLAND	64	64				0.01						
1	A	1	18.64	18.67	PEM1F	DEPRESSIONAL	III A 3	WETLAND	199	199				0.04						
1	A	1	18.67	19.00	PEM1/SS1E	FLAT - ORGANIC	III A 3, II D 3	WETLAND	1716	1716				0.32						
1	A	1	19.00	19.03	PEM1F	DEPRESSIONAL	III A 3	WETLAND	170	170				0.03						
1	A	1	19.03	21.43	PEM1/SS1E	FLAT - ORGANIC	III A 3, II D 3	WETLAND	12674	12674				2.40						
1	A	1	21.43	21.44	R2UBH	RIVERINE	NONE	WETLAND	25	25				0.00						
1	A	1	21.44	22.02	PEM1/SS1B	FLAT - ORGANIC	III A 2, II D	WETLAND	3067	3067				0.58						
1	A	1	22.02	22.05	PEM1/SS1E	DEPRESSIONAL	III A 3, II D	WETLAND	164	164				0.03						
1	A	1	22.05	22.14	PEM1/SS1B	FLAT - ORGANIC	III A 2, II D	WETLAND	465	465				0.09						
1	A	1	22.14	22.17	PEM1/SS1E	DEPRESSIONAL	III A 3, II D	WETLAND	185	185				0.03						
1	A	1	22.17	22.23	PEM1/SS1B	FLAT - ORGANIC	III A 2, II D	WETLAND	328	328				0.06						

SPREAD	SECTION	ROW MODE	FROM MP	TO MP	NWI CODE	HGM CLASS	VIERECK	DESCRIPTION	LINEAR FEET	WETLAND FEET	UPLAND FEET	DISTURBED FEET	Comments	Mode 1 - Ice Workpad (miles)	Mode 2 - Frost Pack (miles)	Mode 3 - Timber Mats	Mode 4 - Granular Workpad	Mode 5A - Grade	Mode 5B - Mountain Grade	Stream & Flood Plain Crossings
1	A	1	22.23	22.28	PEM1/SS1B	FLAT - ORGANIC	III A 2, II D	WETLAND	239	239				0.05						
1	A	1	22.28	22.45	PEM1/SS1C	FLAT - ORGANIC	III A 3, II D	WETLAND	889	889				0.17						
1	A	1	22.45	22.52	PEM1/SS1B	FLAT - ORGANIC	III A 2, II D	WETLAND	395	395				0.07						
1	A	1	22.52	22.71	PEM1/SS1C	FLAT - ORGANIC	III A 3, II D	WETLAND	994	994				0.19						
1	A	1	22.71	22.77	PEM1F	DEPRESSIONAL	III A 3	WETLAND	329	329				0.06						
1	A	1	22.77	25.13	PEM1/SS1B	FLAT - ORGANIC	III A 2, II D	WETLAND	12469	12469				2.36						
1	A	1	25.13	25.57	PEM1E	FLAT - ORGANIC	III A 3	WETLAND	2301	2301				0.44						
1	A	1	25.57	27.37	PEM1/SS1B	FLAT - ORGANIC	III A 2, II D	WETLAND	9529	9529				1.80						
1	A	1	27.37	27.40	PEM1E	SLOPE	III A 3	WETLAND	137	137				0.03						
1	A	1	27.40	27.41	PEM1E	FLAT - ORGANIC	III A 3	WETLAND	51	51				0.01						
1	A	1	27.41	27.48	PEM1/SS1B	FLAT - ORGANIC	III A 2, II D	WETLAND	364	364				0.07						
1	A	1	27.48	27.51	PEM1E	FLAT - ORGANIC	III A 3	WETLAND	172	172				0.03						
1	A	1	27.51	29.33	PEM1/SS1B	FLAT - ORGANIC	III A 2, II D	WETLAND	9620	9620				1.82						
1	A	1	29.33	30.06	PEM1/SS1B	FLAT - ORGANIC	III A 2, II D	WETLAND	3846	3846				0.73						
1	A	1	30.06	30.25	PEM1/SS1E	FLAT - ORGANIC	III A 3, II D	WETLAND	999	999				0.19						
1	A	1	30.25	30.28	PEM1/SS1B	FLAT - ORGANIC	III A 2, II D	WETLAND	153	153				0.03						
1	A	1	30.28	30.32	PEM1/SS1E	FLAT - ORGANIC	III A 3, II D	WETLAND	210	210				0.04						
1	A	1	30.32	30.57	PEM1/SS1B	FLAT - ORGANIC	III A 2, II D	WETLAND	1324	1324				0.25						
1	A	1	30.57	30.62	PEM1/SS1E	FLAT - ORGANIC	III A 3, II D	WETLAND	276	276				0.05						
1	A	1	30.62	30.79	PEM1/SS1C	FLAT - ORGANIC	III A 2, II D	WETLAND	880	880				0.17						
1	A	1	30.79	30.84	PEM1/SS1B	FLAT - ORGANIC	III A 2, II D	WETLAND	252	252				0.05						
1	A	1	30.84	30.86	PEM1/SS1E	FLAT - ORGANIC	III A 3, II D	WETLAND	145	145				0.03						
1	A	1	30.86	31.96	PEM1/SS1B	FLAT - ORGANIC	III A 2, II D	WETLAND	5783	5783				1.10						
1	A	1	31.96	31.99	PEM1E	SLOPE	III A 3	WETLAND	163	163				0.03						
1	A	1	31.99	32.00	PEM1/SS1B	FLAT - ORGANIC	III A 2, II D	WETLAND	77	77				0.01						
1	A	1	32.00	32.02	PEM1E	SLOPE	III A 3	WETLAND	77	77				0.01						
1	A	1	32.02	32.07	PEM1/SS1B	FLAT - ORGANIC	III A 2, II D	WETLAND	247	247				0.05						
1	A	1	32.07	32.07	PEM1E	SLOPE	III A 3	WETLAND	12	12				0.00						
1	A	1	32.07	32.36	PEM1/SS1B	FLAT - ORGANIC	III A 2, II D	WETLAND	1562	1562				0.30						
1	A	1	32.36	32.44	PEM1E	FLAT - ORGANIC	III A 3	WETLAND	407	407				0.08						
1	A	1	32.44	33.25	PEM1/SS1B	FLAT - ORGANIC	III A 2, II D	WETLAND	4258	4258				0.81						
1	A	1	33.25	33.62	U	N/A	III A 1, II D	UPLAND	1968		1968			0.37						
1	A	1	33.62	33.77	PEM1/SS1B	FLAT - ORGANIC	III A 2, II D	WETLAND	811	811				0.15						
1	A	1	33.77	34.20	U	N/A	III A 1, II D	UPLAND	2226		2226			0.42						
1	A	1	34.20	34.85	PEM1/SS1B	FLAT - ORGANIC	III A 2, II D	WETLAND	3455	3455				0.65						
1	A	1	34.85	34.91	PEM1/SS1C	DEPRESSIONAL	III A 3, II D	WETLAND	311	311				0.06						
1	A	1	34.91	35.17	PEM1/SS1C	DEPRESSIONAL	III A 2, II D	WETLAND	1376	1376				0.26						
1	A	1	35.17	35.19	U	N/A	II C 2, II D 1	UPLAND	123		123			0.02						
1	A	1	35.19	35.20	PEM1/SS1C	SLOPE	III A 2, II D	WETLAND	41	41				0.01						
1	A	1	35.20	35.24	PUB/EM1H	DEPRESSIONAL	NONE, III A 3	WETLAND	186	186				0.04						
1	A	1	35.24	35.25	PEM1/SS1C	SLOPE	III A 2, II D	WETLAND	94	94				0.02						
1	A	1	35.25	35.56	PEM1/SS1B	FLAT - ORGANIC	III A 2, II D	WETLAND	1643	1643				0.31						
1	A	1	35.56	35.60	PUBH	DEPRESSIONAL	NONE	WETLAND	188	188				0.04						
1	A	1	35.60	35.65	PEM1/SS1B	FLAT - ORGANIC	III A 2, II D	WETLAND	267	267				0.05						
1	A	1	35.65	35.81	U	N/A	III A 2, II D	UPLAND	866		866			0.16						
1	A	1	35.81	35.83	PEM1/SS1B	FLAT - ORGANIC	III A 2, II D	WETLAND	79	79				0.01						
1	A	1	35.83	35.85	PEM1/SS1C	FLAT - ORGANIC	III A 2, II D	WETLAND	110	110				0.02						
1	A	1	35.85	35.97	PEM1/SS1B	FLAT - ORGANIC	III A 2, II D	WETLAND	650	650				0.12						
1	A	1	35.97	36.01	PEM1/SS1C	FLAT - ORGANIC	III A 2, II D	WETLAND	171	171				0.03						
1	A	1	36.01	36.01	U	N/A	III A 2, II D	UPLAND	7		7			0.00						
1	A	1	36.01	36.01	PEM1/SS1B	FLAT - ORGANIC	III A 2, II D	WETLAND	14	14				0.00						
1	A	1	36.01	36.33	U	N/A	III A 2, II D	UPLAND	1699		1699			0.32						
1	A	1	36.33	36.35	PEM1/SS1C	FLAT - ORGANIC	III A 2, II D	WETLAND	104	104				0.02						
1	A	1	36.35	36.43	U	N/A	III A 2, II D	UPLAND	390		390			0.07						
1	A	1	36.43	36.46	PEM1/SS1B	FLAT - ORGANIC	III A 2, II D	WETLAND	170	170				0.03						
1	A	1	36.46	36.69	U	N/A	III A 2, II D	UPLAND	1209		1209			0.23						
1	A	1	36.69	37.04	PEM1/SS1B	FLAT - ORGANIC	III A 2, II D	WETLAND	1855	1855				0.35						
1	A	1	37.04	37.10	U	N/A	III A 2, II D	UPLAND	344		344			0.07						
1	A	1	37.10	37.14	PEM1/SS1B	FLAT - ORGANIC	III A 2, II D	WETLAND	199	199				0.04						
1	A	1	37.14	37.17	U	N/A	III A 2, II D	UPLAND	146		146			0.03						
1	A	1	37.17	37.19	PEM1/SS1B	FLAT - ORGANIC	III A 2, II D	WETLAND	92	92				0.02						
1	A	1	37.19	37.26	U	N/A	III A 2, II D	UPLAND	413		413			0.08						
1	A	1	37.26	37.28	PEM1/SS1B	FLAT - ORGANIC	III A 2, II D	WETLAND	73	73				0.01						
1	A	1	37.28	38.00	PEM1/SS1E	FLAT - ORGANIC	III A 3, II D	WETLAND	3799	3799				0.72						
1	A	1	38.00	38.02	PSS1B	FLAT - ORGANIC	II C 2	WETLAND	130	130				0.02						
1	A	1	38.02	38.03	PEM1/SS1B	FLAT - ORGANIC	III A 2, II D	WETLAND	66	66				0.01						
1	A	1	38.03	38.08	PUBH	DEPRESSIONAL	NONE	WETLAND	238	238				0.05						
1	A	1	38.08	38.32	PEM1/SS1B	FLAT - ORGANIC	III A 2, II D	WETLAND	1256	1256				0.24						
1	A	1	38.32	38.66	PEM1/SS1B	FLAT - ORGANIC	III A 2, II D	WETLAND	1834	1834				0.35						
1	A	1	38.66	38.74	PEM1/SS1E	FLAT - ORGANIC	III A 3, II D	WETLAND	407	407				0.08						
1	A	1	38.74	38.78	PEM1/SS1B	FLAT - ORGANIC	III A 2, II D	WETLAND	213	213				0.04						
1	A	1	38.78	38.81	PEM1/SS1E	FLAT - ORGANIC	III A 3, II D	WETLAND	133	133				0.03						

SPREAD	SECTION	ROW MODE	FROM MP	TO MP	NWI CODE	HGM CLASS	VIERECK	DESCRIPTION	LINEAR FEET	WETLAND FEET	UPLAND FEET	DISTURBED FEET	Comments	Mode 1 - Ice Workpad (miles)	Mode 2 - Frost Pack (miles)	Mode 3 - Timber Mats	Mode 4 - Granular Workpad	Mode 5A - Grade	Mode 5B - Mountain Grade	Stream & Flood Plain Crossings
1	A	1	38.81	38.90	PEM1/SS1B	FLAT - ORGANIC	III A 2, II D	WETLAND	472	472				0.09						
1	A	1	38.90	38.92	PEM1/SS1E	FLAT - ORGANIC	III A 3, II D	WETLAND	102	102				0.02						
1	A	1	38.92	38.97	PEM1/SS1B	FLAT - ORGANIC	III A 2, II D	WETLAND	293	293				0.06						
1	A	1	38.97	38.97	PEM1/SS1E	FLAT - ORGANIC	III A 3, II D	WETLAND	2	2				0.00						
1	A	1	38.97	39.32	PEM1/SS1B	FLAT - ORGANIC	III A 2, II D	WETLAND	1856	1856				0.35						
1	A	1	39.32	39.45	PEM1/SS1E	FLAT - ORGANIC	III A 3, II D	WETLAND	643	643				0.12						
1	A	1	39.45	39.60	PEM1/SS1E	FLAT - ORGANIC	III A 3, II D	WETLAND	796	796				0.15						
1	A	1	39.60	39.61	PEM1/SS1E	SLOPE	III A 2, II C 2	WETLAND	66	66				0.01						
1	A	1	39.61	39.64	PEM1/SS1E	FLAT - ORGANIC	III A 3, II D	WETLAND	164	164				0.03						
1	A	1	39.64	39.71	PEM1/SS1E	SLOPE	III A 2, II C 2	WETLAND	385	385				0.07						
1	A	1	39.71	39.88	PEM1/SS1E	FLAT - ORGANIC	III A 3, II D	WETLAND	881	881				0.17						
1	A	1	39.88	39.90	PEM1/SS1B	FLAT - ORGANIC	III A 2, II D	WETLAND	119	119				0.02						
1	A	1	39.90	39.92	PEM1/SS1E	FLAT - ORGANIC	III A 3, II D	WETLAND	96	96				0.02						
1	A	1	39.92	39.96	PEM1/SS1E	SLOPE	III A 2, II C 2	WETLAND	190	190				0.04						
1	A	1	39.96	40.10	PEM1/SS1B	FLAT - ORGANIC	III A 2, II D	WETLAND	758	758				0.14						
1	A	1	40.10	40.11	PEM1/SS1E	FLAT - ORGANIC	III A 3, II D	WETLAND	62	62				0.01						
1	A	1	40.11	40.31	PEM1/SS1B	FLAT - ORGANIC	III A 2, II D	WETLAND	1022	1022				0.19						
1	A	1	40.31	40.32	PEM1/SS1E	SLOPE	III A 2, II C 2	WETLAND	96	96				0.02						
1	A	1	40.32	40.38	PEM1/SS1B	FLAT - ORGANIC	III A 2, II D	WETLAND	275	275				0.05						
1	A	1	40.38	40.41	PEM1/SS1E	SLOPE	III A 2, II C 2	WETLAND	165	165				0.03						
1	A	1	40.41	40.42	PUB/EM1H	DEPRESSIONAL	NONE, III A 3	WETLAND	68	68				0.01						
1	A	1	40.42	40.43	PEM1/SS1E	SLOPE	III A 2, II C 2	WETLAND	50	50				0.01						
1	A	1	40.43	40.43	PEM1/SS1E	FLAT - ORGANIC	III A 3, II D	WETLAND	10	10				0.00						
1	A	1	40.43	40.48	PEM1/SS1B	FLAT - ORGANIC	III A 2, II D	WETLAND	243	243				0.05						
1	A	1	40.48	40.51	PEM1/SS1E	FLAT - ORGANIC	III A 3, II D	WETLAND	157	157				0.03						
1	A	1	40.51	40.69	PEM1/SS1B	FLAT - ORGANIC	III A 2, II D	WETLAND	976	976				0.18						
1	A	1	40.69	40.69	PEM1/SS1E	FLAT - ORGANIC	III A 3, II D	WETLAND	12	12				0.00						
1	A	1	40.69	40.78	PEM1/SS1B	FLAT - ORGANIC	III A 2, II D	WETLAND	456	456				0.09						
1	A	1	40.78	40.82	PEM1/SS1E	FLAT - ORGANIC	III A 3, II D	WETLAND	211	211				0.04						
1	A	1	40.82	41.08	PEM1/SS1B	FLAT - ORGANIC	III A 2, II D	WETLAND	1380	1380				0.26						
1	A	1	41.08	41.10	PEM1/SS1E	SLOPE	III A 2, II D	WETLAND	123	123				0.02						
1	A	1	41.10	41.33	PEM1/SS1B	FLAT - ORGANIC	III A 2, II D	WETLAND	1172	1172				0.22						
1	A	1	41.33	41.34	PEM1/SS1B	FLAT - ORGANIC	III A 2, II D	WETLAND	63	63				0.01						
1	A	1	41.34	41.41	PEM1/SS1E	SLOPE	III A 2, II D	WETLAND	377	377				0.07						
1	A	1	41.41	41.59	PEM1/SS1B	FLAT - ORGANIC	III A 2, II D	WETLAND	969	969				0.18						
1	A	1	41.59	41.60	PEM1/SS1E	SLOPE	III A 2, II D	WETLAND	13	13				0.00						
1	A	1	41.60	41.62	PUB/EM1H	DEPRESSIONAL	III A 3, NONE	WETLAND	133	133				0.03						
1	A	1	41.62	41.74	PEM1/SS1E	SLOPE	III A 2, II D	WETLAND	620	620				0.12						
1	A	1	41.74	41.77	PUB/EM1H	DEPRESSIONAL	III A 3, NONE	WETLAND	143	143				0.03						
1	A	1	41.77	41.81	PEM1/SS1E	SLOPE	III A 2, II D	WETLAND	210	210				0.04						
1	A	1	41.81	41.84	PEM1/SS1B	FLAT - ORGANIC	III A 2, II D	WETLAND	178	178				0.03						
1	A	1	41.84	41.86	PEM1/SS1B	FLAT - ORGANIC	III A 2, II D	WETLAND	125	125				0.02						
1	A	1	41.86	41.99	PEM1/SS1B	FLAT - ORGANIC	III A 2, II D	WETLAND	693	693				0.13						
1	A	1	41.99	42.01	PEM1/SS1B	FLAT - ORGANIC	III A 2, II D	WETLAND	83	83				0.02						
1	A	1	42.01	42.09	PEM1/SS1B	FLAT - ORGANIC	III A 2, II D	WETLAND	412	412				0.08						
1	A	1	42.09	42.16	PEM1/SS1B	FLAT - ORGANIC	III A 2, II D	WETLAND	375	375				0.07						
1	A	1	42.16	42.25	PEM1/SS1B	FLAT - ORGANIC	III A 2, II D	WETLAND	506	506				0.10						
1	A	1	42.25	42.28	PEM1/SS1B	FLAT - ORGANIC	III A 2, II D	WETLAND	151	151				0.03						
1	A	1	42.28	42.33	PEM1/SS1B	FLAT - ORGANIC	III A 2, II D	WETLAND	235	235				0.04						
1	A	1	42.33	42.35	PEM1/SS1E	FLAT - ORGANIC	III A 3, II D	WETLAND	105	105				0.02						
1	A	1	42.35	42.39	PEM1/SS1B	FLAT - ORGANIC	III A 2, II D	WETLAND	238	238				0.05						
1	A	1	42.39	42.41	PEM1/SS1E	FLAT - ORGANIC	III A 3, II D	WETLAND	73	73				0.01						
1	A	1	42.41	42.48	PEM1/SS1B	FLAT - ORGANIC	III A 2, II D	WETLAND	383	383				0.07						
1	A	1	42.48	42.49	PEM1/SS1E	FLAT - ORGANIC	III A 3, II D	WETLAND	57	57				0.01						
1	A	1	42.49	42.56	PEM1/SS1B	FLAT - ORGANIC	III A 2, II D	WETLAND	383	383				0.07						
1	A	1	42.56	42.58	PEM1/SS1E	FLAT - ORGANIC	III A 3, II D	WETLAND	72	72				0.01						
1	A	1	42.58	42.64	PEM1/SS1B	FLAT - ORGANIC	III A 2, II D	WETLAND	361	361				0.07						
1	A	1	42.64	42.65	PEM1/SS1B	FLAT - ORGANIC	III A 2, II D	WETLAND	0	0				0.00						
1	A	1	42.65	42.66	PEM1/SS1B	FLAT - ORGANIC	III A 2, II D	WETLAND	79	79				0.01						
1	A	1	42.66	42.69	PEM1/SS1B	FLAT - ORGANIC	III A 2, II D	WETLAND	149	149				0.03						
1	A	1	42.69	42.72	PEM1/SS1E	FLAT - ORGANIC	III A 3, II D	WETLAND	151	151				0.03						
1	A	1	42.72	42.74	PEM1/SS1B	FLAT - ORGANIC	III A 2, II D	WETLAND	97	97				0.02						
1	A	1	42.74	42.75	PEM1/SS1E	FLAT - ORGANIC	III A 3, II D	WETLAND	100	100				0.02						
1	A	1	42.75	42.78	PEM1/SS1B	FLAT - ORGANIC	III A 2, II D	WETLAND	142	142				0.03						
1	A	1	42.78	42.80	PUBH	DEPRESSIONAL	NONE	WETLAND	119	119				0.02						
1	A	1	42.80	42.82	PEM1/SS1E	FLAT - ORGANIC	III A 3, II D	WETLAND	93	93				0.02						
1	A	1	42.82	42.97	PEM1/SS1B	FLAT - ORGANIC	III A 2, II D	WETLAND	787	787				0.15						
1	A	1	42.97	43.00	PEM1/SS1B	FLAT - ORGANIC	III A 2, II D	WETLAND	178	178				0.03						
1	A	1	43.00	44.14	PEM1/SS1B	FLAT - ORGANIC	III A 2, II D	WETLAND	5973	5973				1.13						
1	A	1	44.14	44.15	PUB/EM1H	DEPRESSIONAL	III A 3, NONE	WETLAND	101	101				0.02						
1	A	1	44.15	46.22	PEM1/SS1B	FLAT - ORGANIC	III A 2, II D	WETLAND	10892	10892				2.06						
1	A	1	46.22	47.51	PEM1/SS1B	FLAT - ORGANIC	III A 2, II D	WETLAND	6814	6814				1.29						

SPREAD	SECTION	ROW MODE	FROM MP	TO MP	NWI CODE	HGM CLASS	VIERECK	DESCRIPTION	LINEAR FEET	WETLAND FEET	UPLAND FEET	DISTURBED FEET	Comments	Mode 1 - Ice Workpad (miles)	Mode 2 - Frost Pack (miles)	Mode 3 - Timber Mats	Mode 4 - Granular Workpad	Mode 5A - Grade	Mode 5B - Mountain Grade	Stream & Flood Plain Crossings
1	A	1	47.51	48.38	PEM1/SS1B	FLAT - ORGANIC	III A 2, II D	WETLAND	4607	4607				0.87						
1	A	1	48.38	48.48	PEM1/SS1E	FLAT - ORGANIC	III A 3, II D	WETLAND	519	519				0.10						
1	A	1	48.48	48.50	PEM1/SS1B	FLAT - ORGANIC	III A 2, II D	WETLAND	103	103				0.02						
1	A	1	48.50	48.59	PEM1/SS1B	FLAT - ORGANIC	III A 2, II D	WETLAND	492	492				0.09						
1	A	1	48.59	49.42	PEM1/SS1E	FLAT - ORGANIC	III A 3, II D	WETLAND	4387	4387				0.83						
1	A	1	49.42	52.70	PEM1/SS1B	FLAT - ORGANIC	III A 2, II D	WETLAND	17312	17312				3.28						
1	A	1	52.70	52.83	PEM1/SS1E	DEPRESSIONAL	III A 3, II D	WETLAND	684	684				0.13						
1	A	1	52.83	53.04	PEM1/SS1B	FLAT - ORGANIC	III A 2, II D	WETLAND	1089	1089				0.21						
1	A	1	53.04	54.16	PEM1/SS1E	FLAT - ORGANIC	III A 3, II D	WETLAND	5948	5948				1.13						
1	A	1	54.16	54.20	PEM1F	DEPRESSIONAL	III A 3	WETLAND	188	188				0.04						
1	A	1	54.20	54.46	PEM1/SS1F	DEPRESSIONAL	III A 3, II C 2	WETLAND	1399	1399				0.26						
1	A	1	54.46	54.69	PEM1/SS1E	FLAT - ORGANIC	III A 2, II D 3	WETLAND	1202	1202				0.23						
1	A	1	54.69	55.11	PEM1E	DEPRESSIONAL	III A 2	WETLAND	2191	2191				0.42						
1	A	1	55.11	55.30	PEM1/SS1B	FLAT - ORGANIC	III A 2, II D	WETLAND	1030	1030				0.20						
1	A	1	55.30	55.32	PEM1E	DEPRESSIONAL	III A 2	WETLAND	84	84				0.02						
1	A	1	55.32	55.77	PEM1/SS1B	FLAT - ORGANIC	III A 2, II D 3	WETLAND	2369	2369				0.45						
1	A	1	55.77	55.82	PEM1/SS1B	FLAT - ORGANIC	III A 2, II D	WETLAND	301	301				0.06						
1	A	1	55.82	55.83	PEM1/SS1B	FLAT - ORGANIC	III A 2, II D 3	WETLAND	11	11				0.00						
1	A	1	55.83	56.00	PEM1/SS1F	FLAT - ORGANIC	III A 3, II C 2	WETLAND	907	907				0.17						
1	A	1	56.00	56.00	PEM1/SS1B	FLAT - ORGANIC	III A 2, II D 3	WETLAND	1	1				0.00						
1	A	1	56.00	56.03	PEM1/SS1B	FLAT - ORGANIC	III A 2, II D	WETLAND	178	178				0.03						
1	A	1	56.03	56.09	PEM1/SS1B	FLAT - ORGANIC	III A 2, II D 3	WETLAND	331	331				0.06						
1	A	1	56.09	56.12	PEM1/SS1B	FLAT - ORGANIC	III A 2, II D	WETLAND	144	144				0.03						
1	A	1	56.12	56.14	PEM1/SS1B	FLAT - ORGANIC	III A 2, II D 3	WETLAND	110	110				0.02						
1	A	1	56.14	56.19	PEM1/SS1B	FLAT - ORGANIC	III A 2, II D	WETLAND	271	271				0.05						
1	A	1	56.19	56.63	PEM1/SS1B	FLAT - ORGANIC	III A 2, II D 3	WETLAND	2304	2304				0.44						
1	B	4	56.63	56.63	PEM1/SS1B	FLAT - ORGANIC	III A 2, II D 3	WETLAND	4	4							0.00			
1	B	4	56.63	56.78	PEM1/SS1B	FLAT - ORGANIC	III A 2, II D 3	WETLAND	807	807							0.15			
1	B	4	56.78	56.87	PEM1F	DEPRESSIONAL	III A 3	WETLAND	451	451							0.09			
1	B	4	56.87	57.89	PEM1/SS1B	FLAT - ORGANIC	III A 2, II D 3	WETLAND	5394	5394							1.02			
1	B	4	57.89	57.97	PEM1/SS1B	FLAT - ORGANIC	III A 2, II D	WETLAND	419	419							0.08			
1	B	4	57.97	58.29	PEM1/SS1B	FLAT - ORGANIC	III A 2, II D	WETLAND	1677	1677							0.32			
1	B	4	58.29	58.42	PEM1/SS1B	FLAT - ORGANIC	III A 2, II D 3	WETLAND	701	701							0.13			
1	B	4	58.42	58.55	PEM1/SS1F	DEPRESSIONAL	III A 3, II D 3	WETLAND	680	680							0.13			
1	B	4	58.55	58.66	PEM1/SS1B	FLAT - ORGANIC	III A 2, II D 3	WETLAND	598	598							0.11			
1	B	4	58.66	58.70	PEM1F	DEPRESSIONAL	III A 3	WETLAND	214	214							0.04			
1	B	4	58.70	58.82	PEM1/SS1B	FLAT - ORGANIC	III A 2, II D 3	WETLAND	603	603							0.11			
1	B	4	58.82	58.85	PEM1F	DEPRESSIONAL	III A 3	WETLAND	192	192							0.04			
1	B	4	58.85	59.05	PEM1/SS1B	FLAT - ORGANIC	III A 2, II D 3	WETLAND	1034	1034							0.20			
1	B	4	59.05	59.41	PEM1/SS1F	DEPRESSIONAL	III A 3, II D	WETLAND	1926	1926							0.36			
1	B	4	59.41	60.32	PEM1/SS1E	FLAT - ORGANIC	III A 2, II D 3	WETLAND	4761	4761							0.90			
1	B	4	60.32	61.62	PSS1/EM1F	FLAT - ORGANIC	II D, III A 3	WETLAND	6882	6882							1.30			
1	B	4	61.62	61.70	PSS1/EM1F	FLAT - ORGANIC	II D, III A 3	WETLAND	413	413							0.08			
1	B	4	61.70	61.71	PSS1/EM1F	FLAT - ORGANIC	II D, III A 3	WETLAND	64	64							0.01			
1	B	4	61.71	62.70	PSS1/EM1E	FLAT - ORGANIC	II D, III A 3	WETLAND	5251	5251							0.99			
1	B	4	62.70	63.27	PEM1/SS1B	FLAT - ORGANIC	III A 2, II D 2	WETLAND	3012	3012							0.57			
1	B	4	63.27	63.27	PEM1/SS1B	FLAT - ORGANIC	III A 2, II D 2	WETLAND	4	4							0.00			
1	B	4	63.27	63.29	D	N/A	NONE	DISTURBED	79			79					0.01			
1	B	4	63.29	63.99	PEM1/SS1B	FLAT - ORGANIC	III A 2, II D 2	WETLAND	3694	3694							0.70			
1	B	4	63.99	64.88	PSS1/EM1B	FLAT - ORGANIC	II C 2, III A 2	WETLAND	4689	4689							0.89			
1	B	4	64.88	64.89	PSS1/EM1C	SLOPE	II C 2, III A 2	WETLAND	45	45							0.01			
1	B	4	64.89	65.07	PSS1/EM1B	FLAT - ORGANIC	II C 2, III A 2	WETLAND	957	957							0.18			
1	B	4	65.07	65.10	PSS1/EM1C	SLOPE	II C 2, III A 2	WETLAND	166	166							0.03			
1	B	4	65.10	65.11	PSS1/EM1B	FLAT - ORGANIC	II C 2, III A 2	WETLAND	78	78							0.01			
1	B	4	65.11	65.14	PSS1/EM1C	SLOPE	II C 2, III A 2	WETLAND	156	156							0.03			
1	B	4	65.14	65.37	PSS1/EM1B	FLAT - ORGANIC	II C 2, III A 2	WETLAND	1214	1214							0.23			
1	B	4	65.37	65.60	PSS1/EM1B	FLAT - ORGANIC	II C 2, III A 2	WETLAND	1207	1207							0.23			
1	B	4	65.60	65.80	PSS1/EM1B	FLAT - ORGANIC	II C 2, III A 2	WETLAND	1063	1063							0.20			
1	B	4	65.80	65.85	U	N/A	II D	UPLAND	258		258						0.05			
1	B	4	65.85	65.89	U	N/A	II D	UPLAND	229		229						0.04			
1	B	4	65.89	65.95	PSS1/EM1B	FLAT - ORGANIC	II C 2, III A 2	WETLAND	294	294							0.06			
1	B	4	65.95	65.99	U	N/A	II D	UPLAND	190		190						0.04			
1	B	4	65.99	66.12	PSS1/EM1B	FLAT - ORGANIC	II C 2, III A 2	WETLAND	680	680							0.13			
1	B	4	66.12	66.12	PSS1/EM1E	SLOPE	II C 2, III A 3	WETLAND	40	40							0.01			
1	B	4	66.12	67.37	PSS1/EM1B	FLAT - ORGANIC	II C 2, III A 2	WETLAND	6576	6576							1.25			
1	B	4	67.37	67.37	U	N/A	II C 2, II D	UPLAND	18		18						0.00			
1	B	4	67.37	67.40	PSS1/EM1B	FLAT - ORGANIC	II C 2, III A 2	WETLAND	138	138							0.03			
1	B	4	67.40	67.43	PSS1/EM1E	SLOPE	II C 2, III A 3	WETLAND	151	151							0.03			
1	B	4	67.43	67.46	PSS1B	FLAT - ORGANIC	II C 2	WETLAND	158	158							0.03			
1	B	4	67.46	67.47	U	N/A	II C 2, II D	UPLAND	97		97						0.02			
1	B	4	67.47	68.07	PSS1/EM1B	FLAT - ORGANIC	II C 2, III A 2	WETLAND	3142	3142							0.60			
1	B	4	68.07	68.09	D	N/A	NONE	DISTURBED	102			102					0.02			

SPREAD	SECTION	ROW MODE	FROM MP	TO MP	NWI CODE	HGM CLASS	VIERECK	DESCRIPTION	LINEAR FEET	WETLAND FEET	UPLAND FEET	DISTURBED FEET	Comments	Mode 1 - Ice Workpad (miles)	Mode 2 - Frost Pack (miles)	Mode 3 - Timber Mats	Mode 4 - Granular Workpad	Mode 5A - Grade	Mode 5B - Mountain Grade	Stream & Flood Plain Crossings
1	B	4	68.09	68.27	PSS1/EM1B	FLAT - ORGANIC	II C 2, III A 2	WETLAND	937	937							0.18			
1	B	4	68.27	68.47	PSS1/EM1B	FLAT - ORGANIC	II C 2, III A 2	WETLAND	1063	1063							0.20			
1	B	4	68.47	68.75	PSS1/EM1B	FLAT - ORGANIC	II C 2, III A 2	WETLAND	1483	1483							0.28			
1	B	4	68.75	68.78	PSS1/EM1E	SLOPE	II C 2, III A 2	WETLAND	176	176							0.03			
1	B	4	68.78	68.86	PEM1/SS1B	FLAT - ORGANIC	III A 2, II C 2	WETLAND	385	385							0.07			
1	B	4	68.86	68.88	PSS1/EM1E	DEPRESSIONAL	II D, III A 3	WETLAND	116	116							0.02			
1	B	4	68.88	68.91	PSS1/EM1B	FLAT - ORGANIC	II C 2, III A 2	WETLAND	161	161							0.03			
1	B	4	68.91	69.04	PSS1/EM1B	FLAT - ORGANIC	II C 2, III A 2	WETLAND	692	692							0.13			
1	B	4	69.04	69.05	PSS1/EM1B	FLAT - ORGANIC	III A 2, II C 2	WETLAND	80	80							0.02			
1	B	4	69.05	69.06	PEM1/SS1F	SLOPE	III A 3, II C 2	WETLAND	24	24							0.00			
1	B	4	69.06	69.09	PSS1/EM1B	FLAT - ORGANIC	III A 2, II C 2	WETLAND	157	157							0.03			
1	B	4	69.09	69.09	PEM1/SS1F	SLOPE	III A 3, II C 2	WETLAND	11	11							0.00			
1	B	WB-S	69.09	69.10	PEM1/SS1F	SLOPE	III A 3, II C 2	WETLAND	67	67										0.01
1	B	WB-S	69.10	69.11	PSS1/EM1B	FLAT - ORGANIC	III A 2, II C 2	WETLAND	23	23										0.00
1	B	4	69.11	69.15	PSS1/EM1B	FLAT - ORGANIC	III A 2, II C 2	WETLAND	213	213							0.04			
1	B	4	69.15	69.15	PEM1/SS1E	SLOPE	III A 3, II C 2	WETLAND	25	25							0.00			
1	B	4	69.15	69.16	PSS1/EM1B	FLAT - ORGANIC	III A 2, II C 2	WETLAND	45	45							0.01			
1	B	4	69.16	69.17	PEM1/SS1E	SLOPE	III A 3, II C 2	WETLAND	73	73							0.01			
1	B	4	69.17	69.24	PSS1/EM1E	SLOPE	II D, III A 3	WETLAND	330	330							0.06			
1	B	4	69.24	69.55	PSS1/EM1B	FLAT - ORGANIC	II C 2, III A 2	WETLAND	1675	1675							0.32			
1	B	4	69.55	69.60	PSS1/EM1E	SLOPE	II D, III A 3	WETLAND	226	226							0.04			
1	B	4	69.60	69.61	PEM1/SS1B	FLAT - ORGANIC	III A 2, II C 2	WETLAND	89	89							0.02			
1	B	4	69.61	69.63	PSS1/EM1E	SLOPE	II D, III A 3	WETLAND	78	78							0.01			
1	B	4	69.63	69.68	PSS1/EM1B	FLAT - ORGANIC	II C 2, III A 2	WETLAND	293	293							0.06			
1	B	4	69.68	69.70	PSS1/EM1E	FLAT - ORGANIC	II C 2, III A 2	WETLAND	74	74							0.01			
1	B	4	69.70	69.70	PSS1/EM1E	SLOPE	II D, III A 3	WETLAND	29	29							0.01			
1	B	4	69.70	69.71	PSS1/EM1C	SLOPE	II C 2, III A 3	WETLAND	23	23							0.00			
1	B	4	69.71	69.87	PEM1/SS1B	FLAT - ORGANIC	III A 2, II C 2	WETLAND	846	846							0.16			
1	B	WB-S	69.87	69.87	PEM1/SS1B	FLAT - ORGANIC	III A 2, II C 2	WETLAND	27	27										0.01
1	B	WB-S	69.87	69.88	PSS1/EM1C	SLOPE	II C 2, III A 3	WETLAND	17	17										0.00
1	B	WB-S	69.88	69.88	PEM1/SS1B	FLAT - ORGANIC	III A 2, II C 2	WETLAND	16	16										0.00
1	B	4	69.88	70.46	PEM1/SS1B	FLAT - ORGANIC	III A 2, II C 2	WETLAND	3046	3046							0.58			
1	B	4	70.46	70.46	PUBH	DEPRESSIONAL	NONE	WETLAND	30	30							0.01			
1	B	4	70.46	70.84	PEM1/SS1B	FLAT - ORGANIC	III A 2, II C 2	WETLAND	2007	2007							0.38			
1	B	4	70.84	70.86	PEM1/SS1E	SLOPE	III A 3, II C 2	WETLAND	80	80							0.02			
1	B	4	70.86	70.89	PEM1/SS1B	FLAT - ORGANIC	III A 2, II C 2	WETLAND	146	146							0.03			
1	B	4	70.89	70.91	PEM1/SS1E	SLOPE	III A 3, II C 2	WETLAND	112	112							0.02			
1	B	4	70.91	70.93	PEM1F	DEPRESSIONAL	III A 3	WETLAND	139	139							0.03			
1	B	4	70.93	70.95	PEM1/SS1E	SLOPE	III A 3, II C 2	WETLAND	105	105							0.02			
1	B	4	70.95	70.98	PEM1F	DEPRESSIONAL	III A 3	WETLAND	142	142							0.03			
1	B	4	70.98	71.68	PEM1/SS1B	FLAT - ORGANIC	III A 2, II C 2	WETLAND	3706	3706							0.70			
1	B	4	71.68	71.70	PSS1/EM1E	SLOPE	II C 2, III A 2	WETLAND	102	102							0.02			
1	B	4	71.70	72.12	PEM1/SS1B	FLAT - ORGANIC	III A 2, II C 2	WETLAND	2235	2235							0.42			
1	B	WB-S	72.12	72.13	PEM1/SS1B	FLAT - ORGANIC	III A 2, II C 2	WETLAND	24	24										0.00
1	B	WB-S	72.13	72.14	PSS1C	RIVERINE	II C 2	WETLAND	66	66										0.01
1	B	4	72.14	72.15	PSS1C	RIVERINE	II C 2	WETLAND	34	34							0.01			
1	B	4	72.15	72.15	PSS1C	SLOPE	II C 2	WETLAND	25	25							0.00			
1	B	4	72.15	72.60	PSS1/EM1B	FLAT - ORGANIC	II C 2, III A 2	WETLAND	2373	2373							0.45			
1	B	4	72.60	72.63	PEM1/SS1C	FLAT - ORGANIC	III A 2, II D	WETLAND	134	134							0.03			
1	B	4	72.63	72.63	PSS1/EM1B	FLAT - ORGANIC	II C 2, III A 2	WETLAND	12	12							0.00			
1	B	4	72.63	72.68	PEM1/SS1C	FLAT - ORGANIC	III A 2, II D	WETLAND	242	242							0.05			
1	B	4	72.68	72.85	PSS1/EM1B	FLAT - ORGANIC	II C 2, III A 2	WETLAND	937	937							0.18			
1	B	4	72.85	72.90	PEM1/SS1C	FLAT - ORGANIC	III A 2, II D	WETLAND	226	226							0.04			
1	B	4	72.90	72.90	PSS1/EM1C	SLOPE	II C 2, III A 2	WETLAND	23	23							0.00			
1	B	4	72.90	72.92	PSS1/EM1B	FLAT - ORGANIC	II C 2, III A 2	WETLAND	115	115							0.02			
1	B	4	72.92	72.93	PEM1/SS1E	SLOPE	III A 3, II C 2	WETLAND	68	68							0.01			
1	B	4	72.93	72.97	PSS1/EM1B	FLAT - ORGANIC	II C 2, III A 2	WETLAND	164	164							0.03			
1	B	4	72.97	72.97	PSS1/EM1C	SLOPE	II C 2, III A 2	WETLAND	23	23							0.00			
1	B	4	72.97	73.01	PSS1/EM1B	FLAT - ORGANIC	II C 2, III A 2	WETLAND	222	222							0.04			
1	B	4	73.01	73.05	PEM1/SS1E	SLOPE	III A 3, II C 2	WETLAND	222	222							0.04			
1	B	4	73.05	73.10	PSS1/EM1B	FLAT - ORGANIC	II C 2, III A 2	WETLAND	268	268							0.05			
1	B	4	73.10	73.17	PEM1/SS1E	SLOPE	III A 3, II C 2	WETLAND	329	329							0.06			
1	B	4	73.17	73.18	PEM1/SS1E	FLAT - ORGANIC	III A 3, II C 2	WETLAND	52	52							0.01			
1	B	4	73.18	73.21	PEM1/SS1E	SLOPE	III A 3, II C 2	WETLAND	201	201							0.04			
1	B	4	73.21	73.22	PSS1/EM1B	FLAT - ORGANIC	II C 2, III A 2	WETLAND	23	23							0.00			
1	B	4	73.22	73.22	PEM1/SS1E	SLOPE	III A 3, II C 2	WETLAND	15	15							0.00			
1	B	4	73.22	73.23	PSS1/EM1B	FLAT - ORGANIC	II C 2, III A 2	WETLAND	18	18							0.00			
1	B	4	73.23	73.28	PEM1/SS1E	SLOPE	III A 3, II C 2	WETLAND	285	285							0.05			
1	B	4	73.28	73.40	PEM1/SS1E	FLAT - ORGANIC	III A 3, II C 2	WETLAND	658	658							0.12			
1	B	4	73.40	73.41	PEM1/SS1E	SLOPE	III A 3, II C 2	WETLAND	33	33							0.01			
1	B	4	73.41	73.42	PEM1/SS1E	FLAT - ORGANIC	III A 3, II C 2	WETLAND	38	38							0.01			
1	B	4	73.42	73.42	PEM1/SS1E	SLOPE	III A 3, II C 2	WETLAND	16	16							0.00			

SPREAD	SECTION	ROW MODE	FROM MP	TO MP	NWI CODE	HGM CLASS	VIERECK	DESCRIPTION	LINEAR FEET	WETLAND FEET	UPLAND FEET	DISTURBED FEET	Comments	Mode 1 - Ice Workpad (miles)	Mode 2 - Frost Pack (miles)	Mode 3 - Timber Mats	Mode 4 - Granular Workpad	Mode 5A - Grade	Mode 5B - Mountain Grade	Stream & Flood Plain Crossings
1	B	4	73.42	73.43	PEM1/SS1E	FLAT - ORGANIC	III A 3, II C 2	WETLAND	76	76							0.01			
1	B	4	73.43	73.48	PEM1/SS1E	SLOPE	III A 3, II C 2	WETLAND	255	255							0.05			
1	B	4	73.48	73.50	PSS1/EM1E	SLOPE	II C 2, III A 3	WETLAND	77	77							0.01			
1	B	4	73.50	73.51	PEM1/SS1E	SLOPE	III A 3, II C 2	WETLAND	66	66							0.01			
1	B	4	73.51	73.51	PSS1/EM1E	SLOPE	II C 2, III A 3	WETLAND	20	20							0.00			
1	B	4	73.51	73.53	PSS1/EM1B	FLAT - ORGANIC	II C 2, III A 2	WETLAND	61	61							0.01			
1	B	4	73.53	73.53	PSS1/EM1E	SLOPE	II C 2, III A 3	WETLAND	20	20							0.00			
1	B	4	73.53	73.55	PSS1/EM1B	FLAT - ORGANIC	II C 2, III A 2	WETLAND	132	132							0.03			
1	B	4	73.55	73.57	PSS1/EM1E	SLOPE	II C 2, III A 3	WETLAND	56	56							0.01			
1	B	4	73.57	73.57	PSS1/EM1B	FLAT - ORGANIC	II C 2, III A 2	WETLAND	51	51							0.01			
1	B	4	73.57	73.58	PSS1/EM1E	SLOPE	II C 2, III A 3	WETLAND	21	21							0.00			
1	B	4	73.58	73.58	PSS1/EM1B	FLAT - ORGANIC	II C 2, III A 2	WETLAND	11	11							0.00			
1	B	4	73.58	73.60	PSS1/EM1E	SLOPE	II C 2, III A 3	WETLAND	101	101							0.02			
1	B	4	73.60	73.60	PSS1/EM1B	FLAT - ORGANIC	II C 2, III A 2	WETLAND	1	1							0.00			
1	B	4	73.60	73.62	PSS1/EM1E	SLOPE	II C 2, III A 3	WETLAND	91	91							0.02			
1	B	4	73.62	73.65	PSS1/EM1B	FLAT - ORGANIC	II C 2, III A 2	WETLAND	178	178							0.03			
1	B	4	73.65	73.66	PSS1/EM1E	SLOPE	II C 2, III A 3	WETLAND	23	23							0.00			
1	B	4	73.66	73.67	PSS1/EM1B	FLAT - ORGANIC	II C 2, III A 2	WETLAND	82	82							0.02			
1	B	4	73.67	73.67	PSS1/EM1E	SLOPE	II C 2, III A 3	WETLAND	11	11							0.00			
1	B	4	73.67	73.73	PSS1/EM1B	FLAT - ORGANIC	II C 2, III A 2	WETLAND	325	325							0.06			
1	B	4	73.73	73.76	PSS1C	SLOPE	II C 2	WETLAND	151	151							0.03			
1	B	4	73.76	73.99	PEM1/SS1E	SLOPE	III A 3, II C 2	WETLAND	1213	1213							0.23			
1	B	4	73.99	74.03	PSS1/EM1E	SLOPE	II C 2, III A 3	WETLAND	211	211							0.04			
1	B	4	74.03	74.43	PEM1/SS1E	FLAT - ORGANIC	III A 2, II C 2	WETLAND	2082	2082							0.39			
1	B	4	74.43	74.48	PSS1/EM1E	FLAT - ORGANIC	II D, III A 3	WETLAND	260	260							0.05			
1	B	4	74.48	74.52	PEM1/SS1E	FLAT - ORGANIC	III A 2, II C 2	WETLAND	254	254							0.05			
1	B	4	74.52	74.65	PSS1/EM1E	FLAT - ORGANIC	II D, III A 3	WETLAND	637	637							0.12			
1	B	4	74.65	74.65	U	N/A	II C 2, III A 2	UPLAND	5		5						0.00			
1	B	4	74.65	74.65	U	N/A	II C 2	UPLAND	1		1						0.00			
1	B	WB-S	74.65	74.66	U	N/A	II C 2	UPLAND	71		71									0.01
1	B	WB-S	74.66	74.66	U	N/A	II C 2, III A 2	UPLAND	19		19									0.00
1	B	4	74.66	74.66	U	N/A	II C 2, III A 2	UPLAND	1		1						0.00			
1	B	4	74.66	74.80	PSS1/EM1B	FLAT - ORGANIC	II C 2, III A 2	WETLAND	705	705							0.13			
1	B	4	74.80	74.81	U	N/A	II C 2, III A 2	UPLAND	72		72						0.01			
1	B	4	74.81	74.84	PSS1/EM1B	FLAT - MINERAL	II C 2, III A 2	WETLAND	160	160							0.03			
1	B	4	74.84	74.85	R3UBH	RIVERINE	NONE	WETLAND	23	23							0.00			
1	B	WB-S	74.85	74.85	R3UBH	RIVERINE	NONE	WETLAND	37	37										0.01
1	B	WB-S	74.85	74.86	PSS1/EM1B	FLAT - MINERAL	II C 2, III A 2	WETLAND	23	23										0.00
1	B	4	74.86	75.04	PSS1/EM1B	FLAT - MINERAL	II C 2, III A 2	WETLAND	987	987							0.19			
1	B	4	75.04	75.07	PSS1/EM1F	DEPRESSIONAL	II C 2, III A 3	WETLAND	115	115							0.02			
1	B	4	75.07	75.17	PSS1/EM1B	FLAT - MINERAL	II C 2, III A 2	WETLAND	532	532							0.10			
1	B	4	75.17	75.18	PSS1/EM1F	DEPRESSIONAL	II C 2, III A 3	WETLAND	78	78							0.01			
1	B	4	75.18	75.30	PSS1/EM1B	FLAT - MINERAL	II C 2, III A 2	WETLAND	652	652							0.12			
1	B	4	75.30	75.33	PSS1/EM1F	DEPRESSIONAL	II C 2, III A 3	WETLAND	112	112							0.02			
1	B	4	75.33	75.39	PSS1/EM1B	FLAT - MINERAL	II C 2, III A 2	WETLAND	318	318							0.06			
1	B	4	75.39	75.40	PSS1/EM1C	DEPRESSIONAL	II C 2, III A 3	WETLAND	54	54							0.01			
1	B	4	75.40	75.48	PSS1/EM1B	FLAT - MINERAL	II C 2, III A 2	WETLAND	433	433							0.08			
1	B	4	75.48	75.49	PEM1F	DEPRESSIONAL	III A 3	WETLAND	49	49							0.01			
1	B	4	75.49	75.51	PSS1/EM1B	FLAT - MINERAL	II C 2, III A 2	WETLAND	138	138							0.03			
1	B	4	75.51	75.65	U	N/A	II D 1, II C 2	UPLAND	731		731						0.14			
1	B	4	75.65	75.66	PSS1/EM1C	DEPRESSIONAL	II C 2, III A 3	WETLAND	28	28							0.01			
1	B	4	75.66	75.69	U	N/A	II D 1, II C 2	UPLAND	184		184						0.03			
1	B	4	75.69	75.70	PSS1/EM1C	DEPRESSIONAL	II C 2, III A 3	WETLAND	33	33							0.01			
1	B	4	75.70	75.75	U	N/A	II D 1, II C 2	UPLAND	258		258						0.05			
1	B	4	75.75	75.75	PSS1/EM1B	FLAT - MINERAL	II C 2, III A 2	WETLAND	26	26							0.00			
1	B	4	75.75	75.85	U	N/A	II D 1, II C 2	UPLAND	520		520						0.10			
1	B	4	75.85	75.87	PEM1F	DEPRESSIONAL	III A 3	WETLAND	109	109							0.02			
1	B	4	75.87	76.02	PSS1/EM1B	FLAT - MINERAL	II C 2, III A 2	WETLAND	800	800							0.15			
1	B	4	76.02	76.04	PEM1F	DEPRESSIONAL	III A 3	WETLAND	115	115							0.02			
1	B	4	76.04	76.13	PSS1/EM1B	FLAT - ORGANIC	II D 3, III A 2	WETLAND	475	475							0.09			
1	B	4	76.13	76.16	PEM1/SS1E	FLAT - ORGANIC	III A 3, II C 2	WETLAND	131	131							0.02			
1	B	4	76.16	76.17	PSS1/EM1B	FLAT - ORGANIC	II D 3, III A 2	WETLAND	50	50							0.01			
1	B	4	76.17	76.18	PEM1F	DEPRESSIONAL	III A 3	WETLAND	53	53							0.01			
1	B	4	76.18	76.19	PSS1/EM1B	FLAT - ORGANIC	II D 3, III A 2	WETLAND	84	84							0.02			
1	B	4	76.19	76.30	PSS1/EM1B	FLAT - ORGANIC	II C 2, III A 3	WETLAND	545	545							0.10			
1	B	4	76.30	76.34	PSS1C	SLOPE	II B 2	WETLAND	245	245							0.05			
1	B	4	76.34	76.47	PSS1/EM1C	FLAT - MINERAL	II C 2, III A 2	WETLAND	672	672							0.13			
1	B	4	76.47	76.50	PSS1/EM1C	SLOPE	II C 2, III A 2	WETLAND	163	163							0.03			
1	B	4	76.50	76.52	PSS1/EM1B	FLAT - ORGANIC	II C 2, III A 3	WETLAND	112	112							0.02			
1	B	4	76.52	76.57	PSS1/EM1C	SLOPE	II C 2, III A 2	WETLAND	230	230							0.04			
1	B	4	76.57	76.74	PSS1B	FLAT - MINERAL	II B 2, II C 2	WETLAND	889	889							0.17			
1	B	4	76.74	76.74	PSS1/EM1C	FLAT - MINERAL	II C 2, III A 2	WETLAND	7	7							0.00			

SPREAD	SECTION	ROW MODE	FROM MP	TO MP	NWI CODE	HGM CLASS	VIERECK	DESCRIPTION	LINEAR FEET	WETLAND FEET	UPLAND FEET	DISTURBED FEET	Comments	Mode 1 - Ice Workpad (miles)	Mode 2 - Frost Pack (miles)	Mode 3 - Timber Mats	Mode 4 - Granular Workpad	Mode 5A - Grade	Mode 5B - Mountain Grade	Stream & Flood Plain Crossings
1	B	4	76.74	76.82	PSS1B	FLAT - MINERAL	II B 2, II C 2	WETLAND	425	425							0.08			
1	B	4	76.82	76.83	PSS1/EM1B	DEPRESSIONAL	II C 2, III A 2	WETLAND	47	47							0.01			
1	B	4	76.83	76.84	PSS1A	RIVERINE	II B 1, II C 2	WETLAND	71	71							0.01			
1	B	WB-S	76.84	76.85	PSS1A	RIVERINE	II B 1, II C 2	WETLAND	27	27										0.01
1	B	WB-S	76.85	76.85	R2UBH	RIVERINE	NONE	WETLAND	28	28										0.01
1	B	WB-S	76.85	76.86	PSS1A	RIVERINE	II B 1	WETLAND	35	35										0.01
1	B	4	76.86	76.86	PSS1A	RIVERINE	II B 1	WETLAND	40	40							0.01			
1	B	4	76.86	77.06	PSS1/EM1B	FLAT - MINERAL	II C 2, III A 2	WETLAND	1033	1033							0.20			
1	B	4	77.06	77.08	PSS1/EM1B	FLAT - MINERAL	II C 2, III A 1	WETLAND	96	96							0.02			
1	B	WB-S	77.08	77.08	PSS1/EM1B	FLAT - MINERAL	II C 2, III A 1	WETLAND	16	16										0.00
1	B	WB-S	77.08	77.08	PSS1A	RIVERINE	II B 1	WETLAND	16	16										0.00
1	B	WB-S	77.08	77.08	R2UBH	RIVERINE	NONE	WETLAND	1	1										0.00
1	B	WB-S	77.08	77.10	PSS1/EM1C	FLAT - MINERAL	II C 2, III A 2	WETLAND	57	57										0.01
1	B	4	77.10	77.10	PSS1/EM1C	FLAT - MINERAL	II C 2, III A 2	WETLAND	25	25							0.00			
1	B	4	77.10	77.16	U	N/A	II C 2, III A 2	UPLAND	334		334						0.06			
1	B	4	77.16	77.17	PSS1B	SLOPE	II C 2, II D 3	WETLAND	48	48							0.01			
1	B	4	77.17	77.18	U	N/A	II C 2, III A 2	UPLAND	59		59						0.01			
1	B	4	77.18	77.19	PSS1B	SLOPE	II C 2, II D 3	WETLAND	14	14							0.00			
1	B	WB-S	77.19	77.20	PSS1B	SLOPE	II C 2, II D 3	WETLAND	89	89										0.02
1	B	WB-S	77.20	77.21	R2UBH	RIVERINE	NONE	WETLAND	10	10										0.00
1	B	WB-S	77.21	77.21	PSS1A	RIVERINE	II B 1, II C 2	WETLAND	22	22										0.00
1	B	WB-S	77.21	77.21	U	N/A	II C 2, III A 2	UPLAND	29		29									0.01
1	B	4	77.21	77.25	U	N/A	II C 2, III A 2	UPLAND	168		168						0.03			
1	B	4	77.25	77.26	PSS1/EM1C	SLOPE	II C 2, III A 2	WETLAND	62	62							0.01			
1	B	4	77.26	77.27	U	N/A	II D 1, III A 1	UPLAND	72		72						0.01			
1	B	4	77.27	77.28	PSS1/EM1B	SLOPE	II C 2, III A 2	WETLAND	61	61							0.01			
1	B	4	77.28	77.38	U	N/A	II D 1, III A 1	UPLAND	502		502						0.10			
1	B	4	77.38	77.39	PSS1/EM1B	SLOPE	II C 2, III A 2	WETLAND	55	55							0.01			
1	B	4	77.39	77.51	U	N/A	II D 1, III A 1	UPLAND	623		623						0.12			
1	B	4	77.51	77.52	PUBC	RIVERINE	NONE	WETLAND	65	65							0.01			
1	B	4	77.52	77.52	PSS1/EM1B	SLOPE	II C 2, III A 2	WETLAND	11	11							0.00			
1	B	4	77.52	77.58	U	N/A	II D 1, III A 1	UPLAND	295		295						0.06			
1	B	4	77.58	77.59	PSS1/EM1B	SLOPE	II C 2, III A 2	WETLAND	46	46							0.01			
1	B	4	77.59	77.60	U	N/A	II D 1, III A 1	UPLAND	75		75						0.01			
1	B	4	77.60	77.63	PSS1/EM1B	SLOPE	II C 2, III A 2	WETLAND	134	134							0.03			
1	B	4	77.63	77.85	U	N/A	II D 1, III A 1	UPLAND	1165		1165						0.22			
1	B	4	77.85	77.86	PSS1/EM1E	SLOPE	II C 2, III A 3	WETLAND	47	47							0.01			
1	B	4	77.86	77.86	PSS1/EM1B	FLAT - MINERAL	II C 2, III A 2	WETLAND	27	27							0.01			
1	B	4	77.86	77.97	U	N/A	II D 1, III A 1	UPLAND	572		572						0.11			
1	B	4	77.97	77.99	PEM1/UBF	DEPRESSIONAL	III A 3, NONE	WETLAND	116	116							0.02			
1	B	4	77.99	78.01	PSS1/EM1C	SLOPE	II C 2, III A 2	WETLAND	126	126							0.02			
1	B	4	78.01	78.05	U	N/A	II D 1, III A 1	UPLAND	194		194						0.04			
1	B	4	78.05	78.07	PSS1/EM1C	SLOPE	II C 2, III A 2	WETLAND	77	77							0.01			
1	B	4	78.07	78.07	U	N/A	II D 1, III A 1	UPLAND	27		27						0.01			
1	B	4	78.07	78.09	PSS1/EM1C	SLOPE	II C 2, III A 2	WETLAND	77	77							0.01			
1	B	4	78.09	78.09	U	N/A	II D 1, III A 1	UPLAND	3		3						0.00			
1	B	4	78.09	78.09	PSS1/EM1B	SLOPE	II B 2, II C 2	WETLAND	3	3							0.00			
1	B	4	78.09	78.21	U	N/A	II D 1, III A 1	UPLAND	645		645						0.12			
1	B	4	78.21	78.22	PSS1/EM1C	SLOPE	II C 2, III A 2	WETLAND	73	73							0.01			
1	B	4	78.22	78.41	U	N/A	II D 1, III A 1	UPLAND	1006		1006						0.19			
1	B	4	78.41	78.43	PSS1/EM1C	SLOPE	II C 2, III A 1	WETLAND	77	77							0.01			
1	B	4	78.43	78.48	U	N/A	II D 1, III A 1	UPLAND	289		289						0.05			
1	B	4	78.48	78.49	PSS1/EM1B	SLOPE	II B 2, II C 2	WETLAND	52	52							0.01			
1	B	4	78.49	78.53	PEM1/SS1E	FLAT - MINERAL	III A 3, II C 2	WETLAND	181	181							0.03			
1	B	4	78.53	78.57	PSS1/EM1B	FLAT - MINERAL	II D 3, III A 2	WETLAND	250	250							0.05			
1	B	4	78.57	78.66	U	N/A	II D 1, III A 1	UPLAND	480		480						0.09			
1	B	4	78.66	78.67	PSS1/EM1B	FLAT - MINERAL	II D 3, III A 2	WETLAND	29	29							0.01			
1	B	4	78.67	78.74	U	N/A	II D 1, III A 1	UPLAND	377		377						0.07			
1	B	4	78.74	78.76	PEM1/SS1E	DEPRESSIONAL	III A 3, II C 2	WETLAND	98	98							0.02			
1	B	4	78.76	78.87	PEM1/SS1E	FLAT - MINERAL	III A 3, II C 2	WETLAND	560	560							0.11			
1	B	4	78.87	78.91	PEM1/SS1E	DEPRESSIONAL	III A 3, II C 2	WETLAND	213	213							0.04			
1	B	4	78.91	78.92	PSS1/EM1B	FLAT - MINERAL	II D 3, III A 2	WETLAND	80	80							0.02			
1	B	4	78.92	78.96	U	N/A	II C 2	UPLAND	224		224						0.04			
1	B	4	78.96	78.98	PSS1/EM1B	FLAT - MINERAL	II D 3, III A 2	WETLAND	59	59							0.01			
1	B	4	78.98	78.98	PEM1/SS1E	DEPRESSIONAL	III A 3, II C 2	WETLAND	48	48							0.01			
1	B	4	78.98	79.07	PEM1/SS1E	FLAT - MINERAL	III A 3, II C 2	WETLAND	464	464							0.09			
1	B	4	79.07	79.10	PEM1/SS1E	SLOPE	III A 3, II D 2	WETLAND	133	133							0.03			
1	B	4	79.10	79.13	PEM1/SS1B	FLAT - MINERAL	III A 2, II D 3	WETLAND	171	171							0.03			
1	B	4	79.13	79.20	PEM1/SS1E	SLOPE	III A 3, II D 2	WETLAND	372	372							0.07			
1	B	4	79.20	79.22	PEM1/SS1B	FLAT - MINERAL	III A 2, II D 3	WETLAND	87	87							0.02			
1	B	4	79.22	79.24	U	N/A	II D 1, III A 1	UPLAND	122		122						0.02			
1	B	4	79.24	79.28	PEM1/SS1B	FLAT - MINERAL	III A 2, II D 3	WETLAND	194	194							0.04			

SPREAD	SECTION	ROW MODE	FROM MP	TO MP	NWI CODE	HGM CLASS	VIERECK	DESCRIPTION	LINEAR FEET	WETLAND FEET	UPLAND FEET	DISTURBED FEET	Comments	Mode 1 - Ice Workpad (miles)	Mode 2 - Frost Pack (miles)	Mode 3 - Timber Mats	Mode 4 - Granular Workpad	Mode 5A - Grade	Mode 5B - Mountain Grade	Stream & Flood Plain Crossings
1	B	4	79.28	79.29	PEM1/SS1E	SLOPE	III A 3, II D 2	WETLAND	63	63							0.01			
1	B	4	79.29	79.32	PEM1/SS1B	FLAT - MINERAL	III A 2, II D 3	WETLAND	183	183							0.03			
1	B	4	79.32	79.33	PEM1/SS1E	SLOPE	III A 3, II D 2	WETLAND	44	44							0.01			
1	B	4	79.33	79.34	PEM1/SS1B	FLAT - MINERAL	III A 2, II D 3	WETLAND	27	27							0.01			
1	B	4	79.34	79.35	PEM1/SS1E	SLOPE	III A 3, II D 2	WETLAND	89	89							0.02			
1	B	4	79.35	79.48	PEM1/SS1B	FLAT - MINERAL	III A 2, II D 2	WETLAND	647	647							0.12			
1	B	4	79.48	79.48	PEM1/SS1E	SLOPE	III A 3, II C 2	WETLAND	25	25							0.00			
1	B	4	79.48	79.92	PEM1/SS1B	FLAT - MINERAL	III A 2, II D 2	WETLAND	2315	2315							0.44			
1	B	4	79.92	79.92	PSS1/EM1E	SLOPE	II C 2, III A 3	WETLAND	16	16							0.00			
1	B	4	79.92	79.93	PEM1F	SLOPE	III A 3	WETLAND	41	41							0.01			
1	B	4	79.93	79.98	PSS1B	FLAT - ORGANIC	II C 2	WETLAND	285	285							0.05			
1	B	4	79.98	80.05	PEM1/SS1B	FLAT - ORGANIC	III A 2, II D 3	WETLAND	350	350							0.07			
1	B	4	80.05	80.15	PSS1/EM1F	SLOPE	II C 2, III A 3	WETLAND	502	502							0.10			
1	B	4	80.15	80.17	PEM1/SS1B	FLAT - ORGANIC	III A 2, II D 3	WETLAND	146	146							0.03			
1	B	4	80.17	80.18	PSS1/EM1F	SLOPE	II C 2, III A 3	WETLAND	31	31							0.01			
1	B	4	80.18	80.18	PEM1/SS1B	FLAT - ORGANIC	III A 2, II D 3	WETLAND	7	7							0.00			
1	B	4	80.18	80.25	PSS1/EM1F	SLOPE	II C 2, III A 3	WETLAND	357	357							0.07			
1	B	4	80.25	80.26	PEM1F	DEPRESSIONAL	III A 3	WETLAND	40	40							0.01			
1	B	4	80.26	80.27	PSS1/EM1F	SLOPE	II C 2, III A 3	WETLAND	55	55							0.01			
1	B	WB-S	80.27	80.27	PSS1/EM1F	SLOPE	II C 2, III A 3	WETLAND	20	20										0.00
1	B	WB-S	80.27	80.29	PABH	DEPRESSIONAL	III D 1	WETLAND	111	111										0.02
1	B	WB-S	80.29	80.30	PSS1/EM1F	SLOPE	II C 2, III A 3	WETLAND	57	57										0.01
1	B	WB-S	80.30	80.32	PEM1F	DEPRESSIONAL	III A 3	WETLAND	81	81										0.02
1	B	4	80.32	80.32	PEM1F	DEPRESSIONAL	III A 3	WETLAND	35	35							0.01			
1	B	4	80.32	80.33	PEM1/SS1B	FLAT - MINERAL	III A 2, II D 2	WETLAND	17	17							0.00			
1	B	4	80.33	80.33	PEM1F	DEPRESSIONAL	III A 3	WETLAND	13	13							0.00			
1	B	4	80.33	80.34	PEM1/SS1B	FLAT - MINERAL	III A 2, II D 2	WETLAND	71	71							0.01			
1	B	4	80.34	80.41	PEM1/SS1E	DEPRESSIONAL	II C 2, III A 3	WETLAND	353	353							0.07			
1	B	4	80.41	80.44	PEM1/SS1B	FLAT - MINERAL	III A 2, II D 2	WETLAND	167	167							0.03			
1	B	4	80.44	80.45	PEM1/SS1E	DEPRESSIONAL	II C 2, III A 3	WETLAND	49	49							0.01			
1	B	4	80.45	80.51	PSS1/EM1B	FLAT - ORGANIC	II C 2, III A 2	WETLAND	324	324							0.06			
1	B	4	80.51	80.55	PEM1/SS1B	FLAT - MINERAL	III A 2, II D 2	WETLAND	221	221							0.04			
1	B	4	80.55	80.56	PSS1/EM1B	FLAT - ORGANIC	II C 2, III A 2	WETLAND	36	36							0.01			
1	B	4	80.56	80.59	PSS1C	RIVERINE	II C 2, II D 3	WETLAND	136	136							0.03			
1	B	4	80.59	80.64	PSS1B	FLAT - ORGANIC	II C 2	WETLAND	305	305							0.06			
1	B	4	80.64	80.65	PSS1/EM1B	DEPRESSIONAL	II C 2, III A 2	WETLAND	54	54							0.01			
1	B	4	80.65	80.67	PSS1/EM1B	FLAT - ORGANIC	II B 2, III A 3	WETLAND	68	68							0.01			
1	B	4	80.67	80.67	PSS1/EM1B	DEPRESSIONAL	II C 2, III A 2	WETLAND	5	5							0.00			
1	B	4	80.67	80.69	PSS1/EM1B	FLAT - ORGANIC	II C 2, III A 2	WETLAND	98	98							0.02			
1	B	4	80.69	80.74	PSS1/EM1B	FLAT - ORGANIC	II B 2, III A 3	WETLAND	261	261							0.05			
1	B	4	80.74	80.76	PSS1/EM1B	FLAT - ORGANIC	II C 2, III A 2	WETLAND	109	109							0.02			
1	B	4	80.76	80.79	PEM1F	DEPRESSIONAL	III A 3	WETLAND	163	163							0.03			
1	B	4	80.79	80.80	PSS1/EM1B	FLAT - ORGANIC	II C 2, III A 2	WETLAND	70	70							0.01			
1	B	4	80.80	80.80	PEM1F	DEPRESSIONAL	III A 3	WETLAND	19	19							0.00			
1	B	4	80.80	80.83	PSS1/EM1B	FLAT - ORGANIC	II C 2, III A 2	WETLAND	118	118							0.02			
1	B	4	80.83	80.83	PSS1/EM1E	SLOPE	II B 2, III A 3	WETLAND	32	32							0.01			
1	B	4	80.83	80.88	PSS1/EM1C	FLAT - ORGANIC	II C 2, III A 3	WETLAND	246	246							0.05			
1	B	4	80.88	80.94	PSS1/EM1E	SLOPE	II C 2, III A 3	WETLAND	345	345							0.07			
1	B	4	80.94	80.95	PEM1F	DEPRESSIONAL	III A 3	WETLAND	26	26							0.00			
1	B	4	80.95	80.98	PSS1/EM1E	SLOPE	II C 2, III A 3	WETLAND	155	155							0.03			
1	B	4	80.98	80.98	PEM1F	DEPRESSIONAL	III A 3	WETLAND	18	18							0.00			
1	B	4	80.98	81.07	PSS1/EM1E	SLOPE	II C 2, III A 3	WETLAND	439	439							0.08			
1	B	4	81.07	81.08	PEM1/SS1E	SLOPE	III A 3, II C 2	WETLAND	64	64							0.01			
1	B	4	81.08	81.17	PEM1/SS1B	FLAT - ORGANIC	III A 2, II C 2	WETLAND	463	463							0.09			
1	B	4	81.17	81.18	PSS1/EM1C	SLOPE	II C 2, III A 2	WETLAND	74	74							0.01			
1	B	4	81.18	81.21	PEM1/SS1B	FLAT - ORGANIC	III A 2, II C 2	WETLAND	182	182							0.03			
1	B	4	81.21	81.22	PSS1/EM1C	SLOPE	II C 2, III A 2	WETLAND	11	11							0.00			
1	B	4	81.22	81.29	PEM1/SS1B	FLAT - ORGANIC	III A 2, II C 2	WETLAND	379	379							0.07			
1	B	4	81.29	81.29	PEM1F	DEPRESSIONAL	III A 3	WETLAND	18	18							0.00			
1	B	4	81.29	82.54	PEM1/SS1B	FLAT - ORGANIC	III A 2, II C 2	WETLAND	6617	6617							1.25			
1	B	4	82.54	82.85	PEM1/SS1B	FLAT - ORGANIC	III A 2, II C 2	WETLAND	1618	1618							0.31			
1	B	4	82.85	82.86	PSS1B	SLOPE	II C 2	WETLAND	63	63							0.01			
1	B	4	82.86	82.89	PEM1/SS1B	FLAT - ORGANIC	III A 2, II C 2	WETLAND	117	117							0.02			
1	B	WB-S	82.89	82.89	PEM1/SS1B	FLAT - ORGANIC	III A 2, II C 2	WETLAND	9	9										0.00
1	B	WB-S	82.89	82.89	PSS1B	SLOPE	II C 2	WETLAND	22	22										0.00
1	B	WB-S	82.89	82.89	R2UBH	RIVERINE	NONE	WETLAND	10	10										0.00
1	B	WB-S	82.89	82.89	PSS1E	RIVERINE	II C 2	WETLAND	7	7										0.00
1	B	WB-S	82.89	82.90	PEM1/SS1B	FLAT - ORGANIC	III A 2, II C 2	WETLAND	42	42										0.01
1	B	4	82.90	83.51	PEM1/SS1B	FLAT - ORGANIC	III A 2, II C 2	WETLAND	3208	3208							0.61			
1	B	4	83.51	83.65	PEM1/SS1B	FLAT - ORGANIC	III A 2, II C 2	WETLAND	756	756							0.14			
1	B	4	83.65	84.98	PEM1/SS1B	FLAT - ORGANIC	III A 2, II C 2	WETLAND	7031	7031							1.33			
1	B	4	84.98	84.99	PSS1/EM1B	FLAT - ORGANIC	II C 2, III A 2	WETLAND	43	43							0.01			

SPREAD	SECTION	ROW MODE	FROM MP	TO MP	NWI CODE	HGM CLASS	VIERECK	DESCRIPTION	LINEAR FEET	WETLAND FEET	UPLAND FEET	DISTURBED FEET	Comments	Mode 1 - Ice Workpad (miles)	Mode 2 - Frost Pack (miles)	Mode 3 - Timber Mats	Mode 4 - Granular Workpad	Mode 5A - Grade	Mode 5B - Mountain Grade	Stream & Flood Plain Crossings
1	B	4	84.99	85.00	PEM1/SS1E	SLOPE	III A 3, II C 2	WETLAND	31	31							0.01			
1	B	WB-S	85.00	85.01	PEM1/SS1E	SLOPE	III A 3, II C 2	WETLAND	60	60										0.01
1	B	4	85.01	85.02	PEM1/SS1E	SLOPE	III A 3, II C 2	WETLAND	53	53							0.01			
1	B	4	85.02	85.02	PSS1/EM1B	FLAT - ORGANIC	II C 2, III A 2	WETLAND	13	13							0.00			
1	B	4	85.02	85.02	PEM1/SS1E	SLOPE	III A 3, II C 2	WETLAND	3	3							0.00			
1	B	4	85.02	85.05	PSS1/EM1B	FLAT - ORGANIC	II C 2, III A 2	WETLAND	122	122							0.02			
1	B	4	85.05	85.06	PEM1/SS1E	SLOPE	III A 3, II C 2	WETLAND	68	68							0.01			
1	B	4	85.06	85.06	PSS1/EM1B	FLAT - ORGANIC	II C 2, III A 2	WETLAND	26	26							0.00			
1	B	4	85.06	85.53	PEM1/SS1B	FLAT - ORGANIC	III A 2, II C 2	WETLAND	2464	2464							0.47			
1	B	4	85.53	85.54	PSS1/EM1C	SLOPE	II C 2, III A 2	WETLAND	71	71							0.01			
1	B	4	85.54	85.54	R2UBH	RIVERINE	NONE	WETLAND	0	0							0.00			
1	B	WB-S	85.54	85.55	R2UBH	RIVERINE	NONE	WETLAND	12	12										0.00
1	B	WB-S	85.55	85.56	PEM1/SS1C	SLOPE	III A 2, II C 2	WETLAND	48	48										0.01
1	B	4	85.56	85.56	PEM1/SS1C	SLOPE	III A 2, II C 2	WETLAND	2	2							0.00			
1	B	4	85.56	86.35	PEM1/SS1B	FLAT - ORGANIC	III A 2, II C 2	WETLAND	4168	4168							0.79			
1	B	4	86.35	86.36	PSS1/EM1E	SLOPE	II C 2, III A 2	WETLAND	63	63							0.01			
1	B	4	86.36	86.67	PEM1/SS1B	FLAT - ORGANIC	III A 2, II C 2	WETLAND	1652	1652							0.31			
1	B	4	86.67	86.68	PSS1/EM1B	SLOPE	II C 2, III A 2	WETLAND	55	55							0.01			
1	B	WB-S	86.68	86.69	PSS1/EM1B	SLOPE	II C 2, III A 2	WETLAND	69	69										0.01
1	B	WB-S	86.69	86.70	PEM1/SS1B	FLAT - ORGANIC	III A 2, II D 2	WETLAND	21	21										0.00
1	B	4	86.70	87.16	PEM1/SS1B	FLAT - ORGANIC	III A 2, II D 2	WETLAND	2420	2420							0.46			
1	B	4	87.16	87.16	PEM1B/U	SLOPE	III A 2, II D 2	WETLAND	36	36							0.01			
1	B	4	87.16	87.16	U	N/A	II C 2, II D 2	UPLAND	4		4						0.00			
1	B	WB-S	87.16	87.17	U	N/A	II C 2, II D 2	UPLAND	43		43									0.01
1	B	WB-S	87.17	87.17	PEM1E	SLOPE	III A 2, II D 2	WETLAND	10	10										0.00
1	B	WB-S	87.17	87.19	PEM1B/U	SLOPE	III A 2, II D 2	WETLAND	67	67										0.01
1	B	4	87.19	87.19	PEM1B/U	SLOPE	III A 2, II D 2	WETLAND	8	8							0.00			
1	B	4	87.19	87.78	PEM1/SS1B	FLAT - ORGANIC	III A 2, II D 2	WETLAND	3128	3128							0.59			
1	B	4	87.78	87.79	PEM1/SS1E	SLOPE	III A 3, II D 2	WETLAND	54	54							0.01			
1	B	4	87.79	87.79	PEM1/SS1B	FLAT - ORGANIC	III A 2, II D 2	WETLAND	20	20							0.00			
1	B	WB-S	87.79	87.80	PEM1/SS1B	FLAT - ORGANIC	III A 2, II D 2	WETLAND	27	27										0.01
1	B	WB-S	87.80	87.81	PEM1/SS1E	SLOPE	III A 3, II D 2	WETLAND	63	63										0.01
1	B	4	87.81	87.83	PEM1/SS1E	SLOPE	III A 3, II D 2	WETLAND	100	100							0.02			
1	B	4	87.83	88.11	PEM1/SS1B	FLAT - ORGANIC	III A 2, II C 2	WETLAND	1491	1491							0.28			
1	B	4	88.11	88.13	PSS1/EM1E	SLOPE	II C 2, III A 2	WETLAND	84	84							0.02			
1	B	4	88.13	88.19	PSS1/EM1B	FLAT - ORGANIC	II C 2, III A 2	WETLAND	338	338							0.06			
1	B	4	88.19	88.21	PSS1/EM1E	SLOPE	II C 2, III A 2	WETLAND	72	72							0.01			
1	B	4	88.21	88.25	PSS1/EM1B	FLAT - ORGANIC	II C 2, III A 2	WETLAND	225	225							0.04			
1	B	4	88.25	88.26	PSS1/EM1E	SLOPE	II C 2, III A 2	WETLAND	52	52							0.01			
1	B	4	88.26	88.26	PSS1/EM1C	RIVERINE	II C 2, III A 2	WETLAND	8	8							0.00			
1	B	WB-S	88.26	88.26	PSS1/EM1C	RIVERINE	II C 2, III A 2	WETLAND	5	5										0.00
1	B	WB-S	88.26	88.26	R2UBH	RIVERINE	NONE	WETLAND	19	19										0.00
1	B	WB-S	88.26	88.27	PSS1/EM1B	FLAT - ORGANIC	II C 2, III A 2	WETLAND	36	36										0.01
1	B	4	88.27	88.27	PSS1/EM1B	FLAT - ORGANIC	II C 2, III A 2	WETLAND	1	1							0.00			
1	B	4	88.27	89.03	PEM1/SS1B	FLAT - ORGANIC	III A 2, II C 2	WETLAND	3989	3989							0.76			
1	B	4	89.03	89.03	PSS1/EM1C	SLOPE	II C 2, III A 2	WETLAND	26	26							0.00			
1	B	4	89.03	89.46	PEM1/SS1B	FLAT - ORGANIC	III A 2, II C 2	WETLAND	2236	2236							0.42			
1	B	4	89.46	89.48	PSS1C	SLOPE	II C 2, III A 3	WETLAND	115	115							0.02			
1	B	4	89.48	90.29	PEM1/SS1B	FLAT - ORGANIC	III A 2, II C 2	WETLAND	4313	4313							0.82			
1	B	WB-S	90.29	90.30	PEM1/SS1B	FLAT - ORGANIC	III A 2, II C 2	WETLAND	5	5										0.00
1	B	WB-S	90.30	90.30	PSS1/EM1C	SLOPE	II C 2, III A 3	WETLAND	43	43										0.01
1	B	WB-S	90.30	90.31	PEM1/SS1B	FLAT - ORGANIC	III A 2, II C 2	WETLAND	54	54										0.01
1	B	WB-S	90.31	90.33	PEM1/SS1E	SLOPE	III A 2, II C 2	WETLAND	106	106										0.02
1	B	WB-S	90.33	90.34	R2UBH	RIVERINE	NONE	WETLAND	25	25										0.00
1	B	WB-S	90.34	90.35	PEM1/SS1B	FLAT - ORGANIC	III A 2, II C 2	WETLAND	37	37										0.01
1	B	4	90.35	90.94	PEM1/SS1B	FLAT - ORGANIC	III A 2, II C 2	WETLAND	3123	3123							0.59			
1	B	4	90.94	90.98	PSS1/EM1C	DEPRESSIONAL	II C 2, III A 3	WETLAND	252	252							0.05			
1	B	4	90.98	91.62	PEM1/SS1B	FLAT - ORGANIC	III A 2, II C 2	WETLAND	3341	3341							0.63			
1	B	4	91.62	91.64	PSS1/EM1E	SLOPE	II C 2, III A 3	WETLAND	112	112							0.02			
1	B	4	91.64	91.69	PEM1/SS1E	FLAT - ORGANIC	III A 3, II D 2	WETLAND	281	281							0.05			
1	B	4	91.69	91.70	PSS1/EM1E	SLOPE	II C 2, III A 3	WETLAND	30	30							0.01			
1	B	4	91.70	91.72	PSS1C	SLOPE	II C 2	WETLAND	139	139							0.03			
1	B	4	91.72	92.31	PEM1/SS1B	FLAT - ORGANIC	III A 2, II C 2	WETLAND	3071	3071							0.58			
1	B	4	92.31	92.32	PEM1/SS1E	SLOPE	III A 3, II C 2	WETLAND	61	61							0.01			
1	B	4	92.32	92.33	PEM1/SS1B	FLAT - ORGANIC	III A 2, II C 2	WETLAND	53	53							0.01			
1	B	4	92.33	92.33	PEM1/SS1E	SLOPE	III A 3, II C 2	WETLAND	42	42							0.01			
1	B	4	92.33	92.34	PEM1/SS1C	SLOPE	III A 2, II C 2	WETLAND	38	38							0.01			
1	B	4	92.34	92.35	PEM1/SS1E	SLOPE	III A 3, II C 2	WETLAND	54	54							0.01			
1	B	4	92.35	92.36	PEM1/SS1C	SLOPE	III A 2, II C 2	WETLAND	58	58							0.01			
1	B	4	92.36	93.00	PEM1/SS1B	FLAT - ORGANIC	III A 2, II D 2	WETLAND	3381	3381							0.64			
1	B	4	93.00	93.02	PSS1/EM1B	SLOPE	II C 2, III A 2	WETLAND	103	103							0.02			
1	B	4	93.02	93.06	PSS1/EM1E	SLOPE	II C 2, III A 3	WETLAND	201	201							0.04			

SPREAD	SECTION	ROW MODE	FROM MP	TO MP	NWI CODE	HGM CLASS	VIERECK	DESCRIPTION	LINEAR FEET	WETLAND FEET	UPLAND FEET	DISTURBED FEET	Comments	Mode 1 - Ice Workpad (miles)	Mode 2 - Frost Pack (miles)	Mode 3 - Timber Mats	Mode 4 - Granular Workpad	Mode 5A - Grade	Mode 5B - Mountain Grade	Stream & Flood Plain Crossings
1	B	WB-S	93.06	93.06	PSS1/EM1E	SLOPE	II C 2, III A 3	WETLAND	0	0										0.00
1	B	WB-S	93.06	93.06	PUBH	RIVERINE	NONE	WETLAND	16	16										0.00
1	B	WB-S	93.06	93.08	PEM1/SS1B	FLAT - ORGANIC	III A 2, II D 2	WETLAND	104	104										0.02
1	B	4	93.08	94.53	PEM1/SS1B	FLAT - ORGANIC	III A 2, II D 2	WETLAND	7644	7644							1.45			
1	B	4	94.53	94.54	PSS1/EM1E	SLOPE	II C 2, III A 3	WETLAND	46	46							0.01			
1	B	4	94.54	94.78	PEM1/SS1B	FLAT - ORGANIC	III A 2, II D 2	WETLAND	1264	1264							0.24			
1	B	4	94.78	94.80	PEM1/SS1E	SLOPE	III A 3, II C 2	WETLAND	83	83							0.02			
1	B	4	94.80	94.83	PEM1/SS1B	FLAT - ORGANIC	III A 2, II D 2	WETLAND	179	179							0.03			
1	B	4	94.83	94.83	PEM1/SS1E	SLOPE	III A 3, II C 2	WETLAND	17	17							0.00			
1	B	4	94.83	94.99	PEM1/SS1B	FLAT - ORGANIC	III A 2, II D 2	WETLAND	814	814							0.15			
1	B	4	94.99	95.02	PEM1/SS1E	SLOPE	III A 2, II C 2	WETLAND	152	152							0.03			
1	B	4	95.02	95.03	PEM1/SS1B	FLAT - ORGANIC	III A 2, II D 3	WETLAND	62	62							0.01			
1	B	4	95.03	95.04	PEM1/SS1E	SLOPE	III A 2, II C 2	WETLAND	80	80							0.02			
1	B	4	95.04	95.48	PEM1/SS1B	FLAT - ORGANIC	III A 2, II D 2	WETLAND	2330	2330							0.44			
1	B	4	95.48	95.50	PEM1/SS1E	SLOPE	III A 3, II C 2	WETLAND	89	89							0.02			
1	B	4	95.50	95.51	PSS1/EM1B	FLAT - ORGANIC	II D 2, III A 2	WETLAND	61	61							0.01			
1	B	4	95.51	95.52	PEM1/SS1E	SLOPE	III A 3, II C 2	WETLAND	29	29							0.01			
1	B	4	95.52	98.69	PEM1/SS1B	FLAT - ORGANIC	III A 2, II D 2	WETLAND	16728	16728							3.17			
1	B	4	98.69	98.86	PEM1/SS1B	FLAT - ORGANIC	III A 2, II D	WETLAND	908	908							0.17			
1	B	4	98.86	98.88	PSS1/EM1E	SLOPE	II C 2, III A 2	WETLAND	113	113							0.02			
1	B	4	98.88	98.97	PSS1/EM1B	FLAT - ORGANIC	II D, III A 2	WETLAND	466	466							0.09			
1	B	4	98.97	98.98	U	N/A	II D, II C 2	UPLAND	69		69						0.01			
1	B	4	98.98	99.00	PSS1/EM1B	FLAT - ORGANIC	II D, III A 2	WETLAND	112	112							0.02			
1	B	4	99.00	99.01	U	N/A	II D, II C 2	UPLAND	28		28						0.01			
1	B	4	99.01	99.05	PSS1/EM1B	FLAT - ORGANIC	II D, III A 2	WETLAND	215	215							0.04			
1	B	4	99.05	99.19	PEM1/SS1B	FLAT - ORGANIC	III A 2, II D 2	WETLAND	732	732							0.14			
1	B	WB-S	99.19	99.19	PEM1/SS1B	FLAT - ORGANIC	III A 2, II D 2	WETLAND	6	6										0.00
1	B	WB-S	99.19	99.19	PSS1/EM1F	SLOPE	II C 2, III A 3	WETLAND	13	13										0.00
1	B	WB-S	99.19	99.19	PSS1/EM1F	RIVERINE	II C 2, III A 3	WETLAND	8	8										0.00
1	B	WB-S	99.19	99.19	R2UBH	RIVERINE	NONE	WETLAND	18	18										0.00
1	B	WB-S	99.19	99.20	PSS1/EM1F	SLOPE	II C 2, III A 3	WETLAND	22	22										0.00
1	B	WB-S	99.20	99.20	PEM1/SS1B	FLAT - ORGANIC	III A 2, II D 2	WETLAND	23	23										0.00
1	B	4	99.20	99.22	PEM1/SS1B	FLAT - ORGANIC	III A 2, II D 2	WETLAND	100	100							0.02			
1	B	4	99.22	99.23	PUBH	DEPRESSIONAL	NONE	WETLAND	19	19							0.00			
1	B	4	99.23	99.28	PEM1/SS1B	FLAT - ORGANIC	III A 2, II D 2	WETLAND	287	287							0.05			
1	B	4	99.28	99.29	PSS1/EM1E	SLOPE	II C 2, III A 3	WETLAND	39	39							0.01			
1	B	4	99.29	99.29	PUBH	DEPRESSIONAL	NONE	WETLAND	16	16							0.00			
1	B	4	99.29	99.40	PSS1/EM1B	FLAT - ORGANIC	II C 2, III A 2	WETLAND	576	576							0.11			
1	B	4	99.40	99.40	U	N/A	II D, II C 2	UPLAND	25		25						0.00			
1	B	4	99.40	99.41	PSS1/EM1B	FLAT - ORGANIC	II C 2, III A 2	WETLAND	49	49							0.01			
1	B	4	99.41	99.42	U	N/A	II D, II C 2	UPLAND	47		47						0.01			
1	B	4	99.42	99.43	PSS1/EM1B	FLAT - ORGANIC	II C 2, III A 2	WETLAND	38	38							0.01			
1	B	4	99.43	99.44	U	N/A	II D, II C 2	UPLAND	52		52						0.01			
1	B	4	99.44	99.45	PSS1/EM1B	FLAT - ORGANIC	II C 2, III A 2	WETLAND	36	36							0.01			
1	B	4	99.45	99.45	U	N/A	II D, II C 2	UPLAND	22		22						0.00			
1	B	4	99.45	99.60	PSS1/EM1B	FLAT - ORGANIC	II C 2, III A 2	WETLAND	808	808							0.15			
1	B	4	99.60	99.79	U	N/A	II D, III A 2	UPLAND	963		963						0.18			
1	B	4	99.79	100.16	PSS1/EM1B	FLAT - ORGANIC	II C 2, III A 2	WETLAND	1998	1998							0.38			
1	B	4	100.16	100.17	PSS1/EM1B	SLOPE	II C 2, III A 2	WETLAND	50	50							0.01			
1	B	4	100.17	100.22	PSS1/EM1B	FLAT - ORGANIC	II C 2, III A 2	WETLAND	243	243							0.05			
1	B	4	100.22	100.23	PSS1/EM1B	SLOPE	II C 2, III A 2	WETLAND	34	34							0.01			
1	B	4	100.23	100.23	PSS1/EM1B	FLAT - ORGANIC	II C 2, III A 2	WETLAND	40	40							0.01			
1	B	4	100.23	100.24	PSS1/EM1B	SLOPE	II C 2, III A 2	WETLAND	16	16							0.00			
1	B	4	100.24	100.27	PSS1/EM1B	FLAT - ORGANIC	II C 2, III A 2	WETLAND	192	192							0.04			
1	B	4	100.27	100.28	PSS1/EM1B	SLOPE	II C 2, III A 2	WETLAND	32	32							0.01			
1	B	4	100.28	100.55	PSS1/EM1B	FLAT - ORGANIC	II C 2, III A 2	WETLAND	1431	1431							0.27			
1	B	4	100.55	100.57	PEM1/SS1B	FLAT - ORGANIC	III A 2, II D 3	WETLAND	116	116							0.02			
1	B	4	100.57	100.58	PSS1/EM1E	SLOPE	II C 2, III A 3	WETLAND	16	16							0.00			
1	B	4	100.58	100.58	PSS1B	FLAT - ORGANIC	II C 2	WETLAND	18	18							0.00			
1	B	4	100.58	100.58	PSS1/EM1E	SLOPE	II C 2, III A 3	WETLAND	27	27							0.01			
1	B	4	100.58	100.60	PSS1B	FLAT - ORGANIC	II C 2	WETLAND	81	81							0.02			
1	B	4	100.60	100.61	PSS1/EM1E	SLOPE	II C 2, III A 3	WETLAND	42	42							0.01			
1	B	4	100.61	100.64	PSS1/EM1B	FLAT - ORGANIC	II C 2, III A 2	WETLAND	178	178							0.03			
1	B	4	100.64	100.64	PSS1/EM1B	SLOPE	II C 2, III A 2	WETLAND	1	1							0.00			
1	B	WB-S	100.64	100.65	PSS1/EM1B	SLOPE	II C 2, III A 2	WETLAND	23	23										0.00
1	B	WB-S	100.65	100.65	R3UBH	RIVERINE	NONE	WETLAND	5	5										0.00
1	B	WB-S	100.65	100.65	PSS1/EM1B	SLOPE	II C 2, III A 2	WETLAND	30	30										0.01
1	B	WB-S	100.65	100.66	PEM1/SS1B	FLAT - ORGANIC	III A 2, II D 3	WETLAND	32	32										0.01
1	B	4	100.66	100.74	PEM1/SS1B	FLAT - ORGANIC	III A 2, II D 3	WETLAND	448	448							0.08			
1	B	4	100.74	100.75	U	N/A	II D 1, III A 1	UPLAND	40		40						0.01			
1	B	4	100.75	101.10	PSS1/EM1B	FLAT - ORGANIC	II D 3, III A 2	WETLAND	1836	1836							0.35			
1	B	4	101.10	101.12	PEM1/SS1E	SLOPE	III A 3, II C 2	WETLAND	91	91							0.02			

SPREAD	SECTION	ROW MODE	FROM MP	TO MP	NWI CODE	HGM CLASS	VIERECK	DESCRIPTION	LINEAR FEET	WETLAND FEET	UPLAND FEET	DISTURBED FEET	Comments	Mode 1 - Ice Workpad (miles)	Mode 2 - Frost Pack (miles)	Mode 3 - Timber Mats	Mode 4 - Granular Workpad	Mode 5A - Grade	Mode 5B - Mountain Grade	Stream & Flood Plain Crossings
1	B	4	101.12	101.39	PEM1/SS1B	FLAT - ORGANIC	III A 2, II D	WETLAND	1457	1457							0.28			
1	B	4	101.39	101.41	PSS1B	FLAT - ORGANIC	II C 2	WETLAND	77	77							0.01			
1	B	4	101.41	101.41	PEM1/SS1E	SLOPE	III A 3, II C 2	WETLAND	43	43							0.01			
1	B	4	101.41	101.42	PUBH	DEPRESSIONAL	NONE	WETLAND	12	12							0.00			
1	B	4	101.42	101.43	PEM1/SS1E	SLOPE	III A 3, II C 2	WETLAND	64	64							0.01			
1	B	4	101.43	101.61	PEM1/SS1B	FLAT - ORGANIC	III A 2, II D	WETLAND	953	953							0.18			
1	B	4	101.61	101.61	PSS1E	SLOPE	II C 2	WETLAND	18	18							0.00			
1	B	WB-S	101.61	101.62	PSS1E	SLOPE	II C 2	WETLAND	52	52										0.01
1	B	WB-S	101.62	101.63	PSS1/EM1B	FLAT - ORGANIC	II C 2, III A 2	WETLAND	38	38										0.01
1	B	4	101.63	101.65	PSS1/EM1B	FLAT - ORGANIC	II C 2, III A 2	WETLAND	110	110							0.02			
1	B	4	101.65	101.66	PSS1/EM1B	SLOPE	II C 2, III A 2	WETLAND	40	40							0.01			
1	B	4	101.66	101.79	PEM1/SS1B	FLAT - ORGANIC	III A 2, II D 3	WETLAND	707	707							0.13			
1	B	4	101.79	101.82	PEM1/SS1E	FLAT - ORGANIC	III A 2, II D 3	WETLAND	168	168							0.03			
1	B	4	101.82	101.95	PEM1/SS1B	FLAT - ORGANIC	III A 2, II D 3	WETLAND	650	650							0.12			
1	B	4	101.95	102.10	PSS1/EM1B	FLAT - ORGANIC	II D 3, III A 2	WETLAND	823	823							0.16			
1	B	4	102.10	102.29	PEM1/SS1B	FLAT - ORGANIC	III A 2, II D 3	WETLAND	979	979							0.19			
1	B	4	102.29	102.30	PSS1/EM1C	SLOPE	II C 2, III A 2	WETLAND	43	43							0.01			
1	B	4	102.30	102.31	PEM1/SS1E	SLOPE	III A 3, II D 3	WETLAND	59	59							0.01			
1	B	4	102.31	102.33	PSS1/EM1C	SLOPE	II C 2, III A 2	WETLAND	95	95							0.02			
1	B	4	102.33	102.35	PEM1/SS1B	FLAT - ORGANIC	III A 2, II D 3	WETLAND	149	149							0.03			
1	B	4	102.35	102.36	PSS1/EM1C	SLOPE	II C 2, III A 2	WETLAND	56	56							0.01			
1	B	4	102.36	102.41	PEM1/SS1B	FLAT - ORGANIC	III A 2, II D 3	WETLAND	250	250							0.05			
1	B	4	102.41	102.43	PSS1/EM1C	SLOPE	II C 2, III A 2	WETLAND	118	118							0.02			
1	B	4	102.43	102.45	PEM1/SS1B	FLAT - ORGANIC	III A 2, II D 3	WETLAND	65	65							0.01			
1	B	4	102.45	102.50	PSS1/EM1C	SLOPE	II C 2, III A 2	WETLAND	309	309							0.06			
1	B	4	102.50	102.54	PEM1/SS1B	FLAT - ORGANIC	III A 2, II D 3	WETLAND	166	166							0.03			
1	B	4	102.54	102.58	PEM1/SS1C	SLOPE	III A 2, II D 3	WETLAND	233	233							0.04			
1	B	4	102.58	102.72	PEM1/SS1B	FLAT - ORGANIC	III A 2, II D 3	WETLAND	730	730							0.14			
1	B	4	102.72	102.75	PEM1/SS1C	SLOPE	III A 2, II D 3	WETLAND	163	163							0.03			
1	B	4	102.75	102.77	PEM1/SS1B	FLAT - ORGANIC	III A 2, II D 3	WETLAND	127	127							0.02			
1	B	4	102.77	102.78	PEM1/SS1C	SLOPE	III A 2, II D 3	WETLAND	23	23							0.00			
1	B	4	102.78	102.78	PSS1/EM1F	SLOPE	II C 2, III A 3	WETLAND	27	27							0.01			
1	B	4	102.78	102.79	PEM1/SS1C	SLOPE	III A 2, II D 3	WETLAND	31	31							0.01			
1	B	4	102.79	102.81	PSS1/EM1F	SLOPE	II C 2, III A 3	WETLAND	133	133							0.03			
1	B	4	102.81	102.84	PEM1/SS1B	FLAT - ORGANIC	III A 2, II D 3	WETLAND	162	162							0.03			
1	B	4	102.84	102.86	PSS1B	SLOPE	II C 2, III A 3	WETLAND	92	92							0.02			
1	B	WB-S	102.86	102.87	PSS1B	SLOPE	II C 2, III A 3	WETLAND	60	60										0.01
1	B	4	102.87	102.88	PSS1B	SLOPE	II C 2, III A 3	WETLAND	15	15							0.00			
1	B	4	102.88	102.89	PSS1/EM1F	SLOPE	II C 2, III A 3	WETLAND	54	54							0.01			
1	B	4	102.89	102.90	PEM1/SS1B	FLAT - ORGANIC	III A 2, II D 3	WETLAND	53	53							0.01			
1	B	4	102.90	102.90	PEM1/SS1E	SLOPE	III A 2, II D 3	WETLAND	34	34							0.01			
1	B	4	102.90	102.93	PEM1/SS1B	FLAT - ORGANIC	III A 2, II D 3	WETLAND	148	148							0.03			
1	B	4	102.93	102.95	PEM1/SS1E	SLOPE	III A 2, II D 3	WETLAND	97	97							0.02			
1	B	4	102.95	103.00	PEM1/SS1B	FLAT - ORGANIC	III A 2, II D 3	WETLAND	288	288							0.05			
1	B	4	103.00	103.04	PEM1/SS1E	SLOPE	III A 3, II D 3	WETLAND	201	201							0.04			
1	B	4	103.04	103.06	PEM1/SS1B	FLAT - ORGANIC	III A 2, II D 3	WETLAND	82	82							0.02			
1	B	4	103.06	103.07	PEM1/SS1E	SLOPE	III A 3, II D 3	WETLAND	88	88							0.02			
1	B	4	103.07	103.09	PEM1/SS1B	FLAT - ORGANIC	III A 2, II D 3	WETLAND	72	72							0.01			
1	B	4	103.09	103.10	PEM1/SS1E	SLOPE	III A 3, II D 3	WETLAND	60	60							0.01			
1	B	4	103.10	103.14	PEM1/SS1B	FLAT - ORGANIC	III A 2, II D 3	WETLAND	194	194							0.04			
1	B	4	103.14	103.24	PEM1/SS1E	SLOPE	III A 2, II D 3	WETLAND	548	548							0.10			
1	B	4	103.24	103.25	PEM1/SS1B	FLAT - ORGANIC	III A 2, II D 3	WETLAND	48	48							0.01			
1	B	WB-S	103.25	103.25	PEM1/SS1B	FLAT - ORGANIC	III A 2, II D 3	WETLAND	22	22										0.00
1	B	WB-S	103.25	103.27	PEM1/SS1F	SLOPE	III A 3, II C 2	WETLAND	65	65										0.01
1	B	WB-S	103.27	103.27	PEM1/SS1B	FLAT - ORGANIC	III A 2, II D 3	WETLAND	3	3										0.00
1	B	4	103.27	103.28	PEM1/SS1B	FLAT - ORGANIC	III A 2, II D 3	WETLAND	100	100							0.02			
1	B	4	103.28	103.31	PEM1/SS1E	SLOPE	III A 2, II D 3	WETLAND	130	130							0.02			
1	B	4	103.31	103.37	PEM1/SS1B	FLAT - ORGANIC	III A 2, II D 3	WETLAND	315	315							0.06			
1	B	4	103.37	103.40	PEM1/SS1E	SLOPE	III A 2, II D 3	WETLAND	166	166							0.03			
1	B	4	103.40	103.53	PEM1/SS1B	FLAT - ORGANIC	III A 2, II D 3	WETLAND	660	660							0.12			
1	B	4	103.53	103.56	PEM1/SS1B	SLOPE	III A 2, II D 3	WETLAND	172	172							0.03			
1	B	4	103.56	103.59	PEM1/SS1B	FLAT - ORGANIC	III A 2, II D 3	WETLAND	144	144							0.03			
1	B	4	103.59	103.60	PSS1/EM1E	SLOPE	II C 2, III A 2	WETLAND	74	74							0.01			
1	B	4	103.60	103.61	PSS1/EM1F	SLOPE	II C 2, III A 3	WETLAND	66	66							0.01			
1	B	4	103.61	103.64	PEM1/SS1C	FLAT - ORGANIC	III A 2, II C 2	WETLAND	137	137							0.03			
1	B	4	103.64	103.68	PEM1/SS1B	FLAT - ORGANIC	III A 2, II D 3	WETLAND	222	222							0.04			
1	B	4	103.68	103.68	PEM1/SS1B	SLOPE	III A 2, II D 3	WETLAND	22	22							0.00			
1	B	4	103.68	103.85	PEM1/SS1B	FLAT - ORGANIC	III A 2, II D 3	WETLAND	852	852							0.16			
1	B	WB-S	103.85	103.85	PEM1/SS1B	FLAT - ORGANIC	III A 2, II D 3	WETLAND	6	6										0.00
1	B	WB-S	103.85	103.85	PSS1B	SLOPE	II C 2	WETLAND	21	21										0.00
1	B	WB-S	103.85	103.85	R2UBH	RIVERINE	NONE	WETLAND	5	5										0.00
1	B	WB-S	103.85	103.85	PSS1/EM1C	RIVERINE	II C 2, III A 3	WETLAND	13	13										0.00

SPREAD	SECTION	ROW MODE	FROM MP	TO MP	NWI CODE	HGM CLASS	VIERECK	DESCRIPTION	LINEAR FEET	WETLAND FEET	UPLAND FEET	DISTURBED FEET	Comments	Mode 1 - Ice Workpad (miles)	Mode 2 - Frost Pack (miles)	Mode 3 - Timber Mats	Mode 4 - Granular Workpad	Mode 5A - Grade	Mode 5B - Mountain Grade	Stream & Flood Plain Crossings
1	B	WB-S	103.85	103.86	PSS1B	SLOPE	II C 2	WETLAND	28	28										0.01
1	B	WB-S	103.86	103.86	PEM1/SS1B	FLAT - ORGANIC	III A 2, II D 3	WETLAND	17	17										0.00
1	B	4	103.86	103.91	PEM1/SS1B	FLAT - ORGANIC	III A 2, II D 3	WETLAND	235	235							0.04			
1	B	4	103.91	103.91	PEM1/SS1B	SLOPE	III A 2, II D 3	WETLAND	35	35							0.01			
1	B	4	103.91	104.03	PEM1/SS1B	FLAT - ORGANIC	III A 2, II D 3	WETLAND	609	609							0.12			
1	B	4	104.03	104.04	PEM1/SS1C	SLOPE	III A 2, II D 3	WETLAND	82	82							0.02			
1	B	4	104.04	104.09	PEM1/SS1B	FLAT - ORGANIC	III A 2, II D 3	WETLAND	249	249							0.05			
1	B	4	104.09	104.10	PEM1/SS1C	SLOPE	III A 2, II D 3	WETLAND	27	27							0.01			
1	B	4	104.10	104.10	PEM1/SS1B	FLAT - ORGANIC	III A 2, II D 3	WETLAND	44	44							0.01			
1	B	4	104.10	104.11	PEM1/SS1C	SLOPE	III A 2, II D 3	WETLAND	32	32							0.01			
1	B	4	104.11	104.14	PEM1/SS1B	FLAT - ORGANIC	III A 2, II D 3	WETLAND	157	157							0.03			
1	B	4	104.14	104.16	PEM1/SS1C	SLOPE	III A 2, II D 3	WETLAND	113	113							0.02			
1	B	4	104.16	104.18	PEM1/SS1B	FLAT - ORGANIC	III A 2, II D 3	WETLAND	78	78							0.01			
1	B	4	104.18	104.19	PEM1/SS1C	SLOPE	III A 2, II D 3	WETLAND	73	73							0.01			
1	B	4	104.19	104.25	PEM1/SS1B	FLAT - ORGANIC	III A 2, II D 3	WETLAND	336	336							0.06			
1	B	4	104.25	104.29	PEM1/SS1C	SLOPE	III A 2, II D 3	WETLAND	208	208							0.04			
1	B	4	104.29	104.38	PEM1/SS1B	FLAT - ORGANIC	III A 2, II D 3	WETLAND	440	440							0.08			
1	B	4	104.38	104.39	PEM1/SS1C	SLOPE	III A 2, II D 3	WETLAND	59	59							0.01			
1	B	4	104.39	104.42	PEM1/SS1B	FLAT - ORGANIC	III A 2, II D 3	WETLAND	168	168							0.03			
1	B	4	104.42	104.43	PEM1/SS1C	SLOPE	III A 2, II D 3	WETLAND	30	30							0.01			
1	B	4	104.43	104.43	PEM1/SS1B	FLAT - ORGANIC	III A 2, II D 3	WETLAND	10	10							0.00			
1	B	4	104.43	104.44	PEM1/SS1C	SLOPE	III A 2, II D 3	WETLAND	40	40							0.01			
1	B	4	104.44	104.66	PEM1/SS1B	FLAT - ORGANIC	III A 2, II D 3	WETLAND	1185	1185							0.22			
1	B	4	104.66	104.66	PSS1/EM1C	SLOPE	II C 2, III A 3	WETLAND	20	20							0.00			
1	B	WB-S	104.66	104.66	PSS1/EM1C	SLOPE	II C 2, III A 3	WETLAND	8	8										0.00
1	B	WB-S	104.66	104.67	R3UBH	RIVERINE	NONE	WETLAND	3	3										0.00
1	B	WB-S	104.67	104.67	PSS1/EM1C	SLOPE	II C 2, III A 3	WETLAND	35	35										0.01
1	B	WB-S	104.67	104.67	PEM1/SS1B	FLAT - ORGANIC	III A 2, II D 3	WETLAND	15	15										0.00
1	B	4	104.67	105.06	PEM1/SS1B	FLAT - ORGANIC	III A 2, II D 3	WETLAND	2058	2058							0.39			
1	B	4	105.06	105.07	PEM1/SS1C	SLOPE	III A 3, II D 2	WETLAND	41	41							0.01			
1	B	4	105.07	105.07	PEM1/SS1F	RIVERINE	III A 3, II C 2	WETLAND	1	1							0.00			
1	B	WB-S	105.07	105.08	PEM1/SS1F	RIVERINE	III A 3, II C 2	WETLAND	16	16										0.00
1	B	WB-S	105.08	105.08	R2UBH	RIVERINE	NONE	WETLAND	4	4										0.00
1	B	WB-S	105.08	105.08	PEM1/SS1F	RIVERINE	III A 3, II C 2	WETLAND	16	16										0.00
1	B	WB-S	105.08	105.08	R2UBH	RIVERINE	NONE	WETLAND	11	11										0.00
1	B	WB-S	105.08	105.08	PSS1C	RIVERINE	II C 2	WETLAND	4	4										0.00
1	B	WB-S	105.08	105.08	PEM1/SS1C	SLOPE	III A 3, II D 2	WETLAND	9	9										0.00
1	B	4	105.08	105.09	PEM1/SS1C	SLOPE	III A 3, II D 2	WETLAND	40	40							0.01			
1	B	4	105.09	105.67	PEM1/SS1B	FLAT - ORGANIC	III A 2, II D 3	WETLAND	3058	3058							0.58			
1	B	4	105.67	105.69	PEM1F	SLOPE	III A 3	WETLAND	105	105							0.02			
1	B	4	105.69	105.69	R2UBH	RIVERINE	NONE	WETLAND	7	7							0.00			
1	B	WB-S	105.69	105.70	R2UBH	RIVERINE	NONE	WETLAND	31	31										0.01
1	B	WB-S	105.70	105.70	PEM1F	SLOPE	III A 3	WETLAND	29	29										0.01
1	B	4	105.70	105.71	PEM1F	SLOPE	III A 3	WETLAND	46	46							0.01			
1	B	4	105.71	106.05	PEM1/SS1B	FLAT - ORGANIC	III A 2, II D 3	WETLAND	1810	1810							0.34			
1	B	4	106.05	106.08	PEM1F	SLOPE	III A 3	WETLAND	153	153							0.03			
1	B	WB-S	106.08	106.10	PEM1F	SLOPE	III A 3	WETLAND	83	83										0.02
1	B	WB-S	106.10	106.10	PEM1/SS1B	FLAT - ORGANIC	III A 2, II D 3	WETLAND	7	7										0.00
1	B	4	106.10	106.16	PEM1/SS1B	FLAT - ORGANIC	III A 2, II D 3	WETLAND	319	319							0.06			
1	B	4	106.16	106.19	PEM1C	FLAT - ORGANIC	III A 2	WETLAND	153	153							0.03			
1	B	4	106.19	106.34	PEM1/SS1B	FLAT - ORGANIC	III A 2, II D 3	WETLAND	791	791							0.15			
1	B	4	106.34	106.37	PEM1/SS1E	SLOPE	III A 3, II D 3	WETLAND	146	146							0.03			
1	B	4	106.37	106.71	PEM1/SS1B	FLAT - ORGANIC	III A 2, II C 2	WETLAND	1784	1784							0.34			
1	B	4	106.71	106.79	U	N/A	III A 1, II D	UPLAND	420		420						0.08			
1	B	4	106.79	106.79	PSS1/EM1E	SLOPE	II C 2, III A 2	WETLAND	18	18							0.00			
1	B	WB-S	106.79	106.79	PSS1/EM1E	SLOPE	II C 2, III A 2	WETLAND	1	1										0.00
1	B	WB-S	106.79	106.79	R2UBH	RIVERINE	NONE	WETLAND	27	27										0.01
1	B	WB-S	106.79	106.80	PSS1/EM1B	SLOPE	II C 2, III A 2	WETLAND	32	32										0.01
1	B	4	106.80	106.81	PSS1/EM1B	SLOPE	II C 2, III A 2	WETLAND	40	40							0.01			
1	B	4	106.81	107.23	PEM1/SS1B	FLAT - ORGANIC	III A 2, II D 3	WETLAND	2247	2247							0.43			
1	B	4	107.23	107.32	PSS1/EM1B	FLAT - ORGANIC	II D, III A 2	WETLAND	473	473							0.09			
1	B	WB-S	107.32	107.33	PSS1/EM1B	FLAT - ORGANIC	II D, III A 2	WETLAND	60	60										0.01
1	B	4	107.33	107.40	PSS1/EM1B	FLAT - ORGANIC	II D, III A 2	WETLAND	349	349							0.07			
1	B	4	107.40	107.43	PEM1/SS1E	FLAT - ORGANIC	III A 2, II D	WETLAND	136	136							0.03			
1	B	4	107.43	107.47	PEM1/SS1F	SLOPE	III A 3, II D 2	WETLAND	212	212							0.04			
1	B	4	107.47	107.50	PEM1/SS1B	FLAT - ORGANIC	III A 2, II C 2	WETLAND	187	187							0.04			
1	B	4	107.50	107.51	PEM1/SS1E	SLOPE	III A 2, II C 2	WETLAND	58	58							0.01			
1	B	4	107.51	107.52	PEM1/SS1E	FLAT - ORGANIC	III A 3, II C 2	WETLAND	67	67							0.01			
1	B	4	107.52	107.56	PEM1/SS1B	FLAT - ORGANIC	III A 2, II C 2	WETLAND	208	208							0.04			
1	B	4	107.56	108.21	PEM1/SS1B	FLAT - ORGANIC	III A 2, II D 3	WETLAND	3431	3431							0.65			
1	B	4	108.21	108.23	PSS1/EM1B	SLOPE	II C 2, III A 2	WETLAND	75	75							0.01			
1	B	4	108.23	108.47	PEM1/SS1B	FLAT - ORGANIC	III A 2, II D 3	WETLAND	1251	1251							0.24			

SPREAD	SECTION	ROW MODE	FROM MP	TO MP	NWI CODE	HGM CLASS	VIERECK	DESCRIPTION	LINEAR FEET	WETLAND FEET	UPLAND FEET	DISTURBED FEET	Comments	Mode 1 - Ice Workpad (miles)	Mode 2 - Frost Pack (miles)	Mode 3 - Timber Mats	Mode 4 - Granular Workpad	Mode 5A - Grade	Mode 5B - Mountain Grade	Stream & Flood Plain Crossings
1	B	4	108.47	108.47	PSS1/EM1C	SLOPE	II C 2, III A 2	WETLAND	45	45							0.01			
1	B	4	108.47	108.49	PEM1/SS1E	SLOPE	II C 2, III A 2	WETLAND	65	65							0.01			
1	B	4	108.49	108.49	PSS1/EM1C	SLOPE	II C 2, III A 2	WETLAND	40	40							0.01			
1	B	4	108.49	108.49	PEM1/SS1E	SLOPE	II C 2, III A 2	WETLAND	5	5							0.00			
1	B	4	108.49	108.50	PSS1/EM1C	SLOPE	II C 2, III A 2	WETLAND	44	44							0.01			
1	B	4	108.50	108.53	PSS1/EM1C	FLAT - ORGANIC	II C 2, III A 2	WETLAND	157	157							0.03			
1	B	4	108.53	108.61	PEM1/SS1E	SLOPE	II C 2, III A 2	WETLAND	419	419							0.08			
1	B	WB-S	108.61	108.62	PEM1/SS1E	SLOPE	II C 2, III A 2	WETLAND	63	63										0.01
1	B	WB-S	108.62	108.63	PSS1C	RIVERINE	II C 2	WETLAND	44	44										0.01
1	B	WB-S	108.63	108.64	R3UBH	RIVERINE	NONE	WETLAND	27	27										0.01
1	B	WB-S	108.64	108.66	PSS1C	RIVERINE	II C 2	WETLAND	110	110										0.02
1	B	WB-S	108.66	108.66	R3UBH	RIVERINE	NONE	WETLAND	32	32										0.01
1	B	WB-S	108.66	108.67	PSS1/EM1B	FLAT - ORGANIC	II C 2, II D	WETLAND	54	54										0.01
1	B	4	108.67	108.68	PSS1/EM1B	FLAT - ORGANIC	II C 2, II D	WETLAND	42	42							0.01			
1	B	4	108.68	108.89	PSS1/EM1E	FLAT - ORGANIC	II C 2, III A 3	WETLAND	1102	1102							0.21			
1	B	4	108.89	108.94	PEM1/SS1F	SLOPE	III A 3, II D 2	WETLAND	266	266							0.05			
1	B	4	108.94	108.97	U	N/A	II D	UPLAND	141		141						0.03			
1	B	4	108.97	109.83	PEM1/SS1B	FLAT - ORGANIC	III A 2, II D 3	WETLAND	4533	4533							0.86			
1	B	4	109.83	109.87	PEM1/SS1E	SLOPE	III A 3, II C 2	WETLAND	206	206							0.04			
1	B	4	109.87	109.87	PUBH	DEPRESSIONAL	NONE	WETLAND	5	5							0.00			
1	B	4	109.87	109.90	PEM1/SS1E	SLOPE	III A 3, II C 2	WETLAND	163	163							0.03			
1	B	4	109.90	110.32	PEM1/SS1B	FLAT - ORGANIC	III A 2, II D 3	WETLAND	2221	2221							0.42			
1	B	4	110.32	110.36	PEM1/SS1E	SLOPE	III A 3, II C 2	WETLAND	227	227							0.04			
1	B	4	110.36	110.43	PEM1/SS1E	FLAT - ORGANIC	III A 3, II C 2	WETLAND	375	375							0.07			
1	B	4	110.43	110.58	PSS1B	FLAT - ORGANIC	II D	WETLAND	797	797							0.15			
1	B	4	110.58	110.59	PEM1/SS1E	FLAT - ORGANIC	III A 3, II C 2	WETLAND	59	59							0.01			
1	B	4	110.59	110.62	PSS1B	FLAT - ORGANIC	II D	WETLAND	117	117							0.02			
1	B	4	110.62	110.63	PEM1/SS1E	FLAT - ORGANIC	III A 3, II C 2	WETLAND	51	51							0.01			
1	B	4	110.63	110.64	PSS1B	FLAT - ORGANIC	II D	WETLAND	83	83							0.02			
1	B	4	110.64	110.65	PEM1/SS1E	FLAT - ORGANIC	III A 3, II C 2	WETLAND	35	35							0.01			
1	B	4	110.65	110.65	PEM1F	SLOPE	III A 3	WETLAND	17	17							0.00			
1	B	WB-S	110.65	110.66	PEM1F	SLOPE	III A 3	WETLAND	60	60										0.01
1	B	4	110.66	110.67	PEM1F	SLOPE	III A 3	WETLAND	9	9							0.00			
1	B	4	110.67	110.72	PEM1/SS1E	FLAT - ORGANIC	III A 3, II C 2	WETLAND	280	280							0.05			
1	B	4	110.72	110.72	PEM1/SS1B	FLAT - ORGANIC	III A 2, II D 2	WETLAND	22	22							0.00			
1	B	4	110.72	110.73	U	N/A	II D	UPLAND	62		62						0.01			
1	B	4	110.73	111.47	PEM1/SS1B	FLAT - ORGANIC	III A 2, II D 2	WETLAND	3874	3874							0.73			
1	B	4	111.47	111.50	PEM1/SS1E	SLOPE	III A 3, II C 2	WETLAND	187	187							0.04			
1	B	4	111.50	111.91	PEM1/SS1B	FLAT - ORGANIC	III A 2, II D 2	WETLAND	2167	2167							0.41			
1	B	4	111.91	111.94	PEM1/SS1E	SLOPE	III A 3, II C 2	WETLAND	148	148							0.03			
1	B	4	111.94	113.00	PEM1/SS1B	FLAT - ORGANIC	III A 2, II D 2	WETLAND	5608	5608							1.06			
1	B	4	113.00	113.05	PEM1/SS1E	SLOPE	III A 3, II D 2	WETLAND	223	223							0.04			
1	B	4	113.05	113.24	PEM1/SS1B	FLAT - ORGANIC	III A 2, II D 2	WETLAND	1015	1015							0.19			
1	B	4	113.24	113.24	PEM1/SS1E	FLAT - ORGANIC	III A 2, II D 2	WETLAND	25	25							0.00			
1	B	4	113.24	113.25	PEM1/SS1E	SLOPE	III A 3, II C 2	WETLAND	46	46							0.01			
1	B	4	113.25	113.27	PEM1/SS1E	FLAT - ORGANIC	III A 2, II D 2	WETLAND	106	106							0.02			
1	B	4	113.27	113.29	PEM1/SS1E	SLOPE	III A 3, II C 2	WETLAND	114	114							0.02			
1	B	4	113.29	113.30	PEM1/SS1E	FLAT - ORGANIC	III A 2, II D 2	WETLAND	15	15							0.00			
1	B	4	113.30	113.33	PEM1/SS1B	FLAT - ORGANIC	III A 2, II D 2	WETLAND	156	156							0.03			
1	B	4	113.33	113.33	PEM1/SS1E	FLAT - ORGANIC	III A 2, II D 2	WETLAND	38	38							0.01			
1	B	4	113.33	113.37	PEM1/SS1B	FLAT - ORGANIC	III A 2, II D 2	WETLAND	199	199							0.04			
1	B	4	113.37	113.40	PEM1/SS1E	SLOPE	III A 3, II C 2	WETLAND	166	166							0.03			
1	B	4	113.40	113.42	PEM1/SS1E	FLAT - ORGANIC	III A 2, II D 2	WETLAND	109	109							0.02			
1	B	4	113.42	113.46	PEM1/SS1E	SLOPE	III A 3, II C 2	WETLAND	211	211							0.04			
1	B	4	113.46	113.49	PEM1/SS1E	FLAT - ORGANIC	III A 2, II D 2	WETLAND	142	142							0.03			
1	B	4	113.49	113.64	PEM1/SS1B	FLAT - ORGANIC	III A 2, II D 2	WETLAND	781	781							0.15			
1	B	4	113.64	113.65	PEM1/SS1B	FLAT - ORGANIC	III A 2, II D 2	WETLAND	73	73							0.01			
1	B	4	113.65	113.71	PEM1/SS1E	SLOPE	III A 3, II C 2	WETLAND	309	309							0.06			
1	B	4	113.71	113.76	PEM1/SS1E	FLAT - ORGANIC	III A 2, II D 2	WETLAND	259	259							0.05			
1	B	4	113.76	113.79	PEM1/SS1B	FLAT - ORGANIC	III A 2, II D 2	WETLAND	189	189							0.04			
1	B	4	113.79	113.81	PEM1/SS1E	FLAT - ORGANIC	III A 2, II D 2	WETLAND	68	68							0.01			
1	B	4	113.81	113.82	PEM1/SS1B	FLAT - ORGANIC	III A 2, II D 2	WETLAND	81	81							0.02			
1	B	4	113.82	114.02	PEM1/SS1E	FLAT - ORGANIC	III A 2, II D 2	WETLAND	1028	1028							0.19			
1	B	4	114.02	114.03	PSS1B	DEPRESSIONAL	III A 3, II C 2	WETLAND	51	51							0.01			
1	B	4	114.03	114.21	PEM1/SS1E	FLAT - ORGANIC	III A 2, II D 2	WETLAND	960	960							0.18			
1	B	4	114.21	114.24	U	N/A	II C 1	UPLAND	178		178						0.03			
1	B	4	114.24	114.28	PSS1/EM1C	SLOPE	II C 2, III A 2	WETLAND	197	197							0.04			
1	B	4	114.28	114.74	U	N/A	II C 1	UPLAND	2422		2422						0.46			
1	C	4	114.74	114.88	U	N/A	II C 1	UPLAND	743		743						0.14			
1	C	4	114.88	114.88	U	N/A	II C 2	UPLAND	17		17						0.00			
1	C	4	114.88	114.97	U	N/A	II C 1	UPLAND	471		471						0.09			
1	C	4	114.97	115.00	PSS3/1B	FLAT - ORGANIC	II C 1	WETLAND	147	147							0.03			

SPREAD	SECTION	ROW MODE	FROM MP	TO MP	NWI CODE	HGM CLASS	VIERECK	DESCRIPTION	LINEAR FEET	WETLAND FEET	UPLAND FEET	DISTURBED FEET	Comments	Mode 1 - Ice Workpad (miles)	Mode 2 - Frost Pack (miles)	Mode 3 - Timber Mats	Mode 4 - Granular Workpad	Mode 5A - Grade	Mode 5B - Mountain Grade	Stream & Flood Plain Crossings
1	C	4	115.00	115.14	PEM1/SS1B	FLAT - ORGANIC	III A 2, II C 2	WETLAND	735	735							0.14			
1	C	4	115.14	115.22	PEM1/SS1C	FLAT - ORGANIC	III A 2, II C 2	WETLAND	454	454							0.09			
1	C	4	115.22	115.25	PEM1/SS1B	FLAT - ORGANIC	III A 2, II C 2	WETLAND	136	136							0.03			
1	C	4	115.25	115.27	U	N/A	II D	UPLAND	105		105						0.02			
1	C	4	115.27	115.30	PEM1/SS1B	FLAT - ORGANIC	III A 2, II C 2	WETLAND	134	134							0.03			
1	C	4	115.30	115.31	D	N/A	NONE	DISTURBED	54			54					0.01			
1	C	4	115.31	115.49	PEM1/SS1B	FLAT - ORGANIC	III A 2, II C 2	WETLAND	953	953							0.18			
1	C	4	115.49	115.49	PSS1/EM1E	SLOPE	II C 2, III A 3	WETLAND	4	4							0.00			
1	C	WB-W	115.49	115.50	PSS1/EM1E	SLOPE	II C 2, III A 3	WETLAND	43	43										0.01
1	C	WB-W	115.50	115.50	PEM1/SS1B	FLAT - ORGANIC	III A 2, II D	WETLAND	47	47										0.01
1	C	4	115.50	115.52	PEM1/SS1B	FLAT - ORGANIC	III A 2, II D	WETLAND	67	67							0.01			
1	C	4	115.52	115.53	U	N/A	II D, II C 2	UPLAND	58		58						0.01			
1	C	4	115.53	115.67	PEM1/SS1B	FLAT - ORGANIC	III A 2, II D	WETLAND	767	767							0.15			
1	C	4	115.67	115.68	U	N/A	II D	UPLAND	35		35						0.01			
1	C	4	115.68	115.71	PEM1/SS1B	FLAT - ORGANIC	III A 2, II D	WETLAND	186	186							0.04			
1	C	4	115.71	115.73	U	N/A	II D, II C 2	UPLAND	57		57						0.01			
1	C	4	115.73	115.78	PEM1/SS1B	FLAT - ORGANIC	III A 2, II D	WETLAND	270	270							0.05			
1	C	4	115.78	115.80	U	N/A	II D	UPLAND	104		104						0.02			
1	C	4	115.80	115.82	PEM1/SS1B	FLAT - ORGANIC	III A 2, II D	WETLAND	140	140							0.03			
1	C	4	115.82	115.83	U	N/A	II D, II C 2	UPLAND	47		47						0.01			
1	C	4	115.83	115.85	PEM1/SS1B	FLAT - ORGANIC	III A 2, II D	WETLAND	70	70							0.01			
1	C	4	115.85	115.88	U	N/A	II D, II C 2	UPLAND	202		202						0.04			
1	C	4	115.88	115.93	PEM1/SS1B	FLAT - ORGANIC	III A 2, II D	WETLAND	230	230							0.04			
1	C	4	115.93	115.93	U	N/A	II D, II C 2	UPLAND	31		31						0.01			
1	C	4	115.93	115.96	PEM1/SS1B	FLAT - ORGANIC	III A 2, II D	WETLAND	139	139							0.03			
1	C	4	115.96	115.97	U	N/A	II D, II C 2	UPLAND	68		68						0.01			
1	C	4	115.97	116.01	PEM1/SS1B	FLAT - ORGANIC	III A 2, II D	WETLAND	178	178							0.03			
1	C	4	116.01	116.01	U	N/A	II D, II C 2	UPLAND	43		43						0.01			
1	C	4	116.01	116.03	PEM1/SS1B	FLAT - ORGANIC	III A 2, II D	WETLAND	106	106							0.02			
1	C	4	116.03	116.07	U	N/A	II D, II C 2	UPLAND	198		198						0.04			
1	C	4	116.07	116.13	PEM1/SS1B	FLAT - ORGANIC	III A 2, II D	WETLAND	287	287							0.05			
1	C	4	116.13	116.14	U	N/A	II D	UPLAND	84		84						0.02			
1	C	4	116.14	116.14	PEM1/SS1B	FLAT - ORGANIC	III A 2, II D	WETLAND	9	9							0.00			
1	C	4	116.14	116.14	U	N/A	II D	UPLAND	7		7						0.00			
1	C	4	116.14	116.15	PEM1/SS1B	FLAT - ORGANIC	III A 2, II D	WETLAND	17	17							0.00			
1	C	4	116.15	116.15	U	N/A	II D	UPLAND	5		5						0.00			
1	C	4	116.15	116.16	PEM1/SS1B	FLAT - ORGANIC	III A 2, II D	WETLAND	75	75							0.01			
1	C	4	116.16	116.18	U	N/A	II D	UPLAND	97		97						0.02			
1	C	4	116.18	116.18	PEM1/SS1B	FLAT - ORGANIC	III A 2, II D	WETLAND	12	12							0.00			
1	C	4	116.18	116.19	U	N/A	II D	UPLAND	53		53						0.01			
1	C	4	116.19	116.20	PEM1/SS1B	FLAT - ORGANIC	III A 2, II D	WETLAND	17	17							0.00			
1	C	4	116.20	116.20	U	N/A	II D	UPLAND	20		20						0.00			
1	C	4	116.20	116.20	PEM1/SS1B	FLAT - ORGANIC	III A 2, II D	WETLAND	17	17							0.00			
1	C	4	116.20	116.25	U	N/A	II D	UPLAND	234		234						0.04			
1	C	4	116.25	116.28	PEM1/SS1B	FLAT - ORGANIC	III A 2, II D	WETLAND	153	153							0.03			
1	C	4	116.28	116.28	PSS1/EM1E	SLOPE	II C 2, III A 3	WETLAND	27	27							0.01			
1	C	2	116.28	116.32	PSS1/EM1E	SLOPE	II C 2, III A 3	WETLAND	211	211					0.04					
1	C	2	116.32	116.33	PEM1/SS1B	FLAT - ORGANIC	III A 2, II D	WETLAND	42	42					0.01					
1	C	2	116.33	116.34	PSS1/EM1E	SLOPE	II C 2, III A 3	WETLAND	57	57					0.01					
1	C	2	116.34	116.37	PEM1/SS1B	FLAT - ORGANIC	III A 2, II D	WETLAND	149	149					0.03					
1	C	2	116.37	116.43	PSS1/EM1E	SLOPE	II C 2, III A 3	WETLAND	335	335					0.06					
1	C	2	116.43	116.44	PEM1/SS1B	FLAT - ORGANIC	III A 2, II C 2	WETLAND	47	47					0.01					
1	C	4	116.44	116.50	PEM1/SS1B	FLAT - ORGANIC	III A 2, II C 2	WETLAND	330	330							0.06			
1	C	4	116.50	116.52	U	N/A	II D	UPLAND	108		108						0.02			
1	C	4	116.52	116.57	PEM1/SS1B	FLAT - ORGANIC	III A 2, II C 2	WETLAND	230	230							0.04			
1	C	4	116.57	116.57	PSS1/EM1E	SLOPE	II C 2, III A 3	WETLAND	23	23							0.00			
1	C	2	116.57	116.64	PSS1/EM1E	SLOPE	II C 2, III A 3	WETLAND	383	383					0.07					
1	C	2	116.64	116.65	PEM1/SS1B	FLAT - ORGANIC	III A 2, II C 2	WETLAND	37	37					0.01					
1	C	4	116.65	116.73	PEM1/SS1B	FLAT - ORGANIC	III A 2, II C 2	WETLAND	435	435							0.08			
1	C	4	116.73	116.74	U	N/A	II D	UPLAND	16		16						0.00			
1	C	4	116.74	116.90	PEM1/SS1B	FLAT - ORGANIC	III A 2, II C 2	WETLAND	862	862							0.16			
1	C	4	116.90	116.91	U	N/A	II D	UPLAND	37		37						0.01			
1	C	4	116.91	117.05	PEM1/SS1B	FLAT - ORGANIC	III A 2, II C 2	WETLAND	756	756							0.14			
1	C	4	117.05	117.06	PSS1/EM1E	SLOPE	II C 2, III A 3	WETLAND	23	23							0.00			
1	C	2	117.06	117.08	PSS1/EM1E	SLOPE	II C 2, III A 3	WETLAND	143	143					0.03					
1	C	2	117.08	117.11	PEM1/SS1B	FLAT - ORGANIC	III A 2, II D	WETLAND	157	157					0.03					
1	C	4	117.11	117.63	PEM1/SS1B	FLAT - ORGANIC	III A 2, II D	WETLAND	2714	2714							0.51			
1	C	4	117.63	117.63	PUBH	DEPRESSIONAL	NONE	WETLAND	3	3							0.00			
1	C	4	117.63	117.63	PUBH	DEPRESSIONAL	NONE	WETLAND	8	8							0.00			
1	C	4	117.63	117.64	U	N/A	II C 2, II D	UPLAND	39		39						0.01			
1	C	4	117.64	117.78	PEM1/SS1B	FLAT - ORGANIC	III A 2, II D	WETLAND	781	781							0.15			
1	C	4	117.78	117.84	U	N/A	II D, II C 2	UPLAND	275		275						0.05			

SPREAD	SECTION	ROW MODE	FROM MP	TO MP	NWI CODE	HGM CLASS	VIERECK	DESCRIPTION	LINEAR FEET	WETLAND FEET	UPLAND FEET	DISTURBED FEET	Comments	Mode 1 - Ice Workpad (miles)	Mode 2 - Frost Pack (miles)	Mode 3 - Timber Mats	Mode 4 - Granular Workpad	Mode 5A - Grade	Mode 5B - Mountain Grade	Stream & Flood Plain Crossings
1	C	4	117.84	118.26	PEM1/SS1B	FLAT - ORGANIC	III A 2, II D	WETLAND	2234	2234							0.42			
1	C	4	118.26	118.26	U	N/A	II D	UPLAND	13		13						0.00			
1	C	4	118.26	118.26	PEM1/SS1B	FLAT - ORGANIC	III A 2, II D	WETLAND	3	3							0.00			
1	C	4	118.26	118.28	U	N/A	II D	UPLAND	81		81						0.02			
1	C	4	118.28	118.30	PEM1/SS1B	FLAT - ORGANIC	III A 2, II D	WETLAND	145	145							0.03			
1	C	4	118.30	118.37	U	N/A	II D	UPLAND	342		342						0.06			
1	C	4	118.37	118.47	PEM1/SS1B	FLAT - ORGANIC	III A 2, II D	WETLAND	543	543							0.10			
1	C	4	118.47	118.49	PEM1/SS1E	SLOPE	III A 2, II C 2	WETLAND	96	96							0.02			
1	C	4	118.49	118.56	PEM1/SS1B	FLAT - ORGANIC	III A 2, II D	WETLAND	345	345							0.07			
1	C	4	118.56	118.56	U	N/A	NONE	UPLAND	13		13						0.00			
1	C	4	118.56	118.56	PEM1/SS1B	FLAT - ORGANIC	III A 2, II D	WETLAND	24	24							0.00			
1	C	4	118.56	118.56	U	N/A	II D, II C 2	UPLAND	14		14						0.00			
1	C	4	118.56	118.60	PEM1/SS1B	FLAT - ORGANIC	III A 2, II D	WETLAND	161	161							0.03			
1	C	4	118.60	118.63	U	N/A	II D, II C 2	UPLAND	200		200						0.04			
1	C	4	118.63	118.64	PEM1/SS1B	FLAT - ORGANIC	III A 2, II D	WETLAND	41	41							0.01			
1	C	4	118.64	118.66	U	N/A	II D, II C 2	UPLAND	124		124						0.02			
1	C	4	118.66	118.77	PEM1/SS1B	FLAT - ORGANIC	III A 2, II D	WETLAND	543	543							0.10			
1	C	4	118.77	118.81	U	N/A	II D, II C 2	UPLAND	208		208						0.04			
1	C	4	118.81	119.00	PEM1/SS1B	FLAT - ORGANIC	III A 2, II D	WETLAND	1045	1045							0.20			
1	C	4	119.00	119.01	U	N/A	II D	UPLAND	32		32						0.01			
1	C	4	119.01	119.20	PEM1/SS1B	FLAT - ORGANIC	III A 2, II D	WETLAND	1012	1012							0.19			
1	C	4	119.20	119.21	U	N/A	II D	UPLAND	30		30						0.01			
1	C	4	119.21	119.25	PEM1/SS1B	FLAT - ORGANIC	III A 2, II D	WETLAND	228	228							0.04			
1	C	4	119.25	119.25	U	N/A	II D	UPLAND	15		15						0.00			
1	C	4	119.25	119.26	D	N/A	NONE	DISTURBED	36			36					0.01			
1	C	4	119.26	119.49	PSS1/EM1B	FLAT - ORGANIC	II D 3, III A 2	WETLAND	1228	1228							0.23			
1	C	4	119.49	119.51	U	N/A	II D	UPLAND	100		100						0.02			
1	C	4	119.51	119.52	PUB/EM1F	DEPRESSIONAL	III A 3	WETLAND	34	34							0.01			
1	C	4	119.52	119.53	U	N/A	II D	UPLAND	57		57						0.01			
1	C	4	119.53	119.53	PSS1/EM1B	FLAT - ORGANIC	II D 3, III A 2	WETLAND	17	17							0.00			
1	C	4	119.53	119.65	U	N/A	II D	UPLAND	627		627						0.12			
1	C	4	119.65	119.67	PUB/EM1F	DEPRESSIONAL	III A 3	WETLAND	82	82							0.02			
1	C	4	119.67	119.70	U	N/A	II D	UPLAND	167		167						0.03			
1	C	4	119.70	119.71	PSS1/EM1B	FLAT - ORGANIC	II D 3, III A 2	WETLAND	81	81							0.02			
1	C	4	119.71	119.72	PEM1C	DEPRESSIONAL	III A 2	WETLAND	45	45							0.01			
1	C	4	119.72	119.77	PSS1/EM1B	FLAT - ORGANIC	II D 3, III A 2	WETLAND	274	274							0.05			
1	C	4	119.77	119.78	U	N/A	II D	UPLAND	47		47						0.01			
1	C	4	119.78	119.79	PSS1/EM1B	FLAT - ORGANIC	II D 3, III A 2	WETLAND	23	23							0.00			
1	C	4	119.79	119.85	U	N/A	II D	UPLAND	307		307						0.06			
1	C	4	119.85	119.86	PSS1/EM1B	FLAT - ORGANIC	II D 3, III A 2	WETLAND	91	91							0.02			
1	C	4	119.86	119.88	U	N/A	II D	UPLAND	98		98						0.02			
1	C	4	119.88	119.89	PSS1/EM1B	FLAT - ORGANIC	II D 3, III A 2	WETLAND	36	36							0.01			
1	C	4	119.89	119.91	U	N/A	II D	UPLAND	113		113						0.02			
1	C	4	119.91	119.94	PSS1/EM1B	FLAT - ORGANIC	II D 3, III A 2	WETLAND	140	140							0.03			
1	C	4	119.94	119.96	U	N/A	II D	UPLAND	100		100						0.02			
1	C	4	119.96	120.06	PSS1/EM1B	FLAT - ORGANIC	II D 3, III A 2	WETLAND	544	544							0.10			
1	C	4	120.06	120.06	U	N/A	II D	UPLAND	17		17						0.00			
1	C	4	120.06	121.48	PSS1/EM1B	FLAT - ORGANIC	II D 3, III A 2	WETLAND	7484	7484							1.42			
1	C	4	121.48	121.51	U	N/A	II D	UPLAND	161		161						0.03			
1	C	5A	121.51	121.53	U	N/A	II D	UPLAND	120		120							0.02		
1	C	4	121.53	121.54	U	N/A	II D	UPLAND	51		51						0.01			
1	C	4	121.54	121.58	PSS1/EM1B	FLAT - ORGANIC	II D 3, III A 2	WETLAND	219	219							0.04			
1	C	WB-W	121.58	121.58	PSS1/EM1B	FLAT - ORGANIC	II D 3, III A 2	WETLAND	4	4										0.00
1	C	WB-W	121.58	121.59	R3UBH	RIVERINE	NONE	WETLAND	24	24										0.00
1	C	WB-W	121.59	121.59	PEM1/SS1E	SLOPE	III A 2, II C 2	WETLAND	32	32										0.01
1	C	4	121.59	121.64	PEM1/SS1E	SLOPE	III A 2, II C 2	WETLAND	230	230							0.04			
1	C	4	121.64	121.65	U	N/A	II D	UPLAND	78		78						0.01			
1	C	4	121.65	121.78	PSS1/EM1B	FLAT - ORGANIC	II D 3, III A 2	WETLAND	652	652							0.12			
1	C	4	121.78	121.78	U	N/A	II D, II C 2	UPLAND	38		38						0.01			
1	C	4	121.78	121.79	PSS1/EM1B	FLAT - ORGANIC	II D 3, III A 2	WETLAND	50	50							0.01			
1	C	4	121.79	121.83	PSS1/EM1E	SLOPE	II D, III A 3	WETLAND	211	211							0.04			
1	C	WB-W	121.83	121.84	PSS1/EM1E	SLOPE	II D, III A 3	WETLAND	60	60										0.01
1	C	4	121.84	121.86	PSS1/EM1E	SLOPE	II D, III A 3	WETLAND	55	55							0.01			
1	C	4	121.86	121.86	PSS1/EM1B	FLAT - ORGANIC	II D 3, III A 2	WETLAND	36	36							0.01			
1	C	4	121.86	121.88	PEM1/SS1C	SLOPE	III A 3, II D	WETLAND	95	95							0.02			
1	C	4	121.88	121.89	PSS1/EM1B	FLAT - ORGANIC	II D 3, III A 2	WETLAND	61	61							0.01			
1	C	4	121.89	121.89	PEM1/SS1C	SLOPE	III A 3, II D	WETLAND	11	11							0.00			
1	C	4	121.89	121.95	PSS1/EM1B	FLAT - ORGANIC	II D 3, III A 2	WETLAND	281	281							0.05			
1	C	4	121.95	121.96	PSS1/EM1E	SLOPE	II D, III A 3	WETLAND	44	44							0.01			
1	C	4	121.96	122.16	PSS1/EM1B	FLAT - ORGANIC	II D 3, III A 2	WETLAND	1083	1083							0.21			
1	C	4	122.16	122.18	U	N/A	II D	UPLAND	118		118						0.02			
1	C	4	122.18	122.19	PSS1/EM1B	FLAT - ORGANIC	II D 3, III A 2	WETLAND	56	56							0.01			

SPREAD	SECTION	ROW MODE	FROM MP	TO MP	NWI CODE	HGM CLASS	VIERECK	DESCRIPTION	LINEAR FEET	WETLAND FEET	UPLAND FEET	DISTURBED FEET	Comments	Mode 1 - Ice Workpad (miles)	Mode 2 - Frost Pack (miles)	Mode 3 - Timber Mats	Mode 4 - Granular Workpad	Mode 5A - Grade	Mode 5B - Mountain Grade	Stream & Flood Plain Crossings
1	C	4	122.19	122.23	U	N/A	II D	UPLAND	217		217						0.04			
1	C	4	122.23	122.25	PSS1/EM1B	FLAT - ORGANIC	II D 3, III A 2	WETLAND	106	106							0.02			
1	C	4	122.25	122.28	PEM1/SS1B	SLOPE	III A 2, II C 2	WETLAND	131	131							0.02			
1	C	4	122.28	122.28	PSS1/EM1B	FLAT - ORGANIC	II D 3, III A 2	WETLAND	25	25							0.00			
1	C	4	122.28	122.33	PEM1/SS1B	SLOPE	III A 2, II C 2	WETLAND	221	221							0.04			
1	C	4	122.33	122.47	PSS1/EM1B	FLAT - ORGANIC	II D 3, III A 2	WETLAND	786	786							0.15			
1	C	4	122.47	122.48	PEM1/SS1C	SLOPE	III A 2, II C 2	WETLAND	19	19							0.00			
1	C	4	122.48	122.52	PSS1/EM1B	FLAT - ORGANIC	II D 3, III A 2	WETLAND	223	223							0.04			
1	C	4	122.52	122.52	PEM1/SS1C	SLOPE	III A 2, II C 2	WETLAND	20	20							0.00			
1	C	4	122.52	122.57	PSS1/EM1B	FLAT - ORGANIC	II D 2, III A 2	WETLAND	240	240							0.05			
1	C	4	122.57	122.59	PEM1/SS1C	SLOPE	III A 2, II C 2	WETLAND	127	127							0.02			
1	C	4	122.59	122.61	PSS1/EM1B	FLAT - ORGANIC	II D 2, III A 2	WETLAND	101	101							0.02			
1	C	4	122.61	122.65	PEM1/SS1C	SLOPE	III A 2, II C 2	WETLAND	171	171							0.03			
1	C	4	122.65	122.88	PSS1/EM1B	FLAT - ORGANIC	II D 3, III A 2	WETLAND	1251	1251							0.24			
1	C	4	122.88	122.89	D	N/A	NONE	DISTURBED	65			65					0.01			
1	C	4	122.89	123.03	PEM1/SS1B	FLAT - ORGANIC	III A 2, II D 2	WETLAND	693	693							0.13			
1	C	4	123.03	123.03	D	N/A	NONE	DISTURBED	45			45					0.01			
1	C	4	123.03	123.45	PEM1/SS1B	FLAT - ORGANIC	III A 2, II D 2	WETLAND	2205	2205							0.42			
1	C	4	123.45	123.47	PSS1/EM1E	SLOPE	II D 2, III A 3	WETLAND	83	83							0.02			
1	C	4	123.47	123.54	PSS1/EM1B	FLAT - ORGANIC	II D 3, III A 2	WETLAND	367	367							0.07			
1	C	4	123.54	123.55	PSS1/EM1E	SLOPE	II D 2, III A 3	WETLAND	56	56							0.01			
1	C	4	123.55	123.56	PSS1/EM1B	FLAT - ORGANIC	II D 3, III A 2	WETLAND	48	48							0.01			
1	C	4	123.56	123.58	PSS1/EM1E	SLOPE	II D 2, III A 3	WETLAND	131	131							0.02			
1	C	4	123.58	123.61	PSS1/EM1B	FLAT - ORGANIC	II D 3, III A 2	WETLAND	159	159							0.03			
1	C	4	123.61	123.62	PSS1/EM1E	SLOPE	II D 2, III A 3	WETLAND	52	52							0.01			
1	C	4	123.62	124.38	PSS1/EM1B	FLAT - ORGANIC	II D 3, III A 2	WETLAND	3985	3985							0.75			
1	C	4	124.38	124.46	PSS1/EM1B	FLAT - ORGANIC	II D 3, III A 2	WETLAND	438	438							0.08			
1	C	4	124.46	124.46	PSS1/EM1E	SLOPE	II D 2, III A 3	WETLAND	24	24							0.00			
1	C	WB-W	124.46	124.47	PSS1/EM1E	SLOPE	II D 2, III A 3	WETLAND	50	50										0.01
1	C	WB-W	124.47	124.48	PSS1/EM1B	FLAT - ORGANIC	II D 3, III A 2	WETLAND	10	10										0.00
1	C	4	124.48	124.89	PSS1/EM1B	FLAT - ORGANIC	II D 3, III A 2	WETLAND	2193	2193							0.42			
1	C	4	124.89	126.04	PSS1/EM1B	FLAT - ORGANIC	II D 3, III A 2	WETLAND	6086	6086							1.15			
1	C	4	126.04	126.13	PSS1/EM1E	SLOPE	II D 2, III A 3	WETLAND	480	480							0.09			
1	C	WB-W	126.13	126.14	PSS1/EM1E	SLOPE	II D 2, III A 3	WETLAND	49	49										0.01
1	C	WB-W	126.14	126.15	PEM1/SS1E	SLOPE	III A 3, II D 2	WETLAND	11	11										0.00
1	C	4	126.15	126.24	PEM1/SS1E	SLOPE	III A 3, II D 2	WETLAND	507	507							0.10			
1	C	4	126.24	126.24	PUBH	DEPRESSIONAL	NONE	WETLAND	0	0							0.00			
1	C	4	126.24	126.25	PEM1/SS1E	SLOPE	III A 3, II D 2	WETLAND	20	20							0.00			
1	C	4	126.25	126.31	PSS1/EM1E	SLOPE	II D 2, III A 3	WETLAND	351	351							0.07			
1	C	4	126.31	127.24	PEM1/SS1B	FLAT - ORGANIC	III A 2, II D 3	WETLAND	4918	4918							0.93			
1	C	4	127.24	127.46	PEM1/SS1B	FLAT - ORGANIC	III A 2, II D 3	WETLAND	1147	1147							0.22			
1	C	4	127.46	127.49	PSS1/EM1E	SLOPE	II C 2, III A 3	WETLAND	127	127							0.02			
1	C	4	127.49	127.49	PEM1/SS1B	FLAT - ORGANIC	III A 2, II D 3	WETLAND	35	35							0.01			
1	C	4	127.49	127.52	PSS1/EM1E	SLOPE	II C 2, III A 3	WETLAND	127	127							0.02			
1	C	4	127.52	127.52	PUBH	DEPRESSIONAL	NONE	WETLAND	14	14							0.00			
1	C	4	127.52	127.54	PSS1/EM1E	SLOPE	II C 2, III A 3	WETLAND	136	136							0.03			
1	C	4	127.54	127.55	PEM1/SS1B	FLAT - ORGANIC	III A 2, II D 3	WETLAND	51	51							0.01			
1	C	4	127.55	127.57	PSS1/EM1E	SLOPE	II C 2, III A 3	WETLAND	81	81							0.02			
1	C	4	127.57	128.17	PEM1/SS1B	FLAT - ORGANIC	III A 2, II D 3	WETLAND	3195	3195							0.61			
1	C	WB-W	128.17	128.18	PEM1/SS1B	FLAT - ORGANIC	III A 2, II D 3	WETLAND	10	10										0.00
1	C	WB-W	128.18	128.19	PEM1/SS1E	SLOPE	III A 3, II D 3	WETLAND	50	50										0.01
1	C	4	128.19	128.21	PEM1/SS1E	SLOPE	III A 3, II D 3	WETLAND	121	121							0.02			
1	C	4	128.21	128.24	PEM1/SS1B	FLAT - ORGANIC	III A 2, II D 3	WETLAND	160	160							0.03			
1	C	4	128.24	128.26	U	N/A	II D 3, III A 2	UPLAND	114		114						0.02			
1	C	4	128.26	128.57	PEM1/SS1B	FLAT - ORGANIC	III A 2, II D 3	WETLAND	1647	1647							0.31			
1	C	4	128.57	128.59	PSS1/EM1B	SLOPE	II C 2, III A 2	WETLAND	76	76							0.01			
1	C	4	128.59	128.59	PSS1E	RIVERINE	II C 2	WETLAND	11	11							0.00			
1	C	WB-W	128.59	128.59	PSS1E	RIVERINE	II C 2	WETLAND	27	27										0.01
1	C	WB-W	128.59	128.60	PUBH	RIVERINE	NONE	WETLAND	18	18										0.00
1	C	WB-W	128.60	128.60	PSS1E	RIVERINE	II C 2	WETLAND	15	15										0.00
1	C	4	128.60	128.60	PSS1E	RIVERINE	II C 2	WETLAND	11	11							0.00			
1	C	4	128.60	128.84	PSS1B	FLAT - ORGANIC	II D 3	WETLAND	1260	1260							0.24			
1	C	4	128.84	128.90	PSS1/EM1B	FLAT - ORGANIC	II D 3, III A 2	WETLAND	321	321							0.06			
1	C	4	128.90	128.96	PEM1/SS1E	SLOPE	III A 2, II C 2	WETLAND	311	311							0.06			
1	C	4	128.96	129.05	PSS1B	FLAT - ORGANIC	II D 3	WETLAND	465	465							0.09			
1	C	4	129.05	129.26	PSS1/EM1B	FLAT - ORGANIC	II D 3, III A 2	WETLAND	1119	1119							0.21			
1	C	4	129.26	129.28	PSS1B	SLOPE	II C 2	WETLAND	114	114							0.02			
1	C	WB-W	129.28	129.29	PSS1B	SLOPE	II C 2	WETLAND	26	26										0.00
1	C	WB-W	129.29	129.29	PSS1/EM1E	RIVERINE	II C 2, III A 2	WETLAND	10	10										0.00
1	C	WB-W	129.29	129.29	PUBH	RIVERINE	NONE	WETLAND	15	15										0.00
1	C	WB-W	129.29	129.29	PSS1/EM1E	RIVERINE	II C 2, III A 2	WETLAND	12	12										0.00
1	C	WB-W	129.29	129.30	PSS1B	SLOPE	II C 2	WETLAND	26	26										0.01

SPREAD	SECTION	ROW MODE	FROM MP	TO MP	NWI CODE	HGM CLASS	VIERECK	DESCRIPTION	LINEAR FEET	WETLAND FEET	UPLAND FEET	DISTURBED FEET	Comments	Mode 1 - Ice Workpad (miles)	Mode 2 - Frost Pack (miles)	Mode 3 - Timber Mats	Mode 4 - Granular Workpad	Mode 5A - Grade	Mode 5B - Mountain Grade	Stream & Flood Plain Crossings
1	C	4	129.30	129.31	PSS1B	SLOPE	II C 2	WETLAND	36	36							0.01			
1	C	4	129.31	129.54	PSS1/EM1B	FLAT - ORGANIC	II D 3, III A 2	WETLAND	1231	1231							0.23			
1	C	4	129.54	129.54	U	N/A	II D 3, III A 2	UPLAND	17		17						0.00			
1	C	4	129.54	129.55	D	N/A	NONE	DISTURBED	64			64					0.01			
1	C	4	129.55	130.04	PSS1/EM1B	FLAT - ORGANIC	II D 3, III A 2	WETLAND	2569	2569							0.49			
1	C	4	130.04	130.09	PSS1B	FLAT - ORGANIC	II C 2, II D	WETLAND	236	236							0.04			
1	C	4	130.09	130.10	PSS1B	SLOPE	II C 2, II D	WETLAND	61	61							0.01			
1	C	4	130.10	130.12	PSS1/EM1E	SLOPE	II C 2, III A 3	WETLAND	135	135							0.03			
1	C	4	130.12	130.65	PSS1/EM1B	FLAT - ORGANIC	II D 2, III A 2	WETLAND	2804	2804							0.53			
1	C	4	130.65	130.66	PSS1/EM1B	SLOPE	II D 2, III A 2	WETLAND	46	46							0.01			
1	C	4	130.66	130.69	PSS1/EM1B	FLAT - ORGANIC	II D 2, III A 2	WETLAND	163	163							0.03			
1	C	4	130.69	130.71	PSS1/EM1B	SLOPE	II D 2, III A 2	WETLAND	65	65							0.01			
1	C	4	130.71	130.72	PSS1/EM1B	FLAT - ORGANIC	II D 2, III A 2	WETLAND	65	65							0.01			
1	C	4	130.72	130.74	PEM1/SS1B	FLAT - ORGANIC	III A 2, II C 2	WETLAND	107	107							0.02			
1	C	4	130.74	130.79	PEM1/SS1C	SLOPE	III A 2, II D 2	WETLAND	282	282							0.05			
1	C	4	130.79	130.80	PEM1/SS1B	FLAT - ORGANIC	III A 2, II D 2	WETLAND	64	64							0.01			
1	C	4	130.80	130.83	PSS1/EM1B	DEPRESSIONAL	II D 2, III A 3	WETLAND	146	146							0.03			
1	C	4	130.83	130.88	PEM1/SS1B	FLAT - ORGANIC	III A 2, II D 2	WETLAND	279	279							0.05			
1	C	WB-W	130.88	130.89	PEM1/SS1B	FLAT - ORGANIC	III A 2, II D 2	WETLAND	36	36										0.01
1	C	WB-W	130.89	130.90	R3UBH	RIVERINE	NONE	WETLAND	39	39										0.01
1	C	WB-W	130.90	130.91	PEM1/SS1E	SLOPE	III A 2, II C 2	WETLAND	45	45										0.01
1	C	4	130.91	130.95	PEM1/SS1E	SLOPE	III A 2, II C 2	WETLAND	222	222							0.04			
1	C	4	130.95	131.07	PSS1/EM1B	FLAT - ORGANIC	II D 2, III A 2	WETLAND	620	620							0.12			
1	C	4	131.07	131.11	PEM1/SS1E	SLOPE	III A 2, II C 2	WETLAND	213	213							0.04			
1	C	4	131.11	132.16	PEM1/SS1B	FLAT - ORGANIC	III A 2, II D	WETLAND	5555	5555							1.05			
1	C	4	132.16	132.16	PEM1/SS1C	SLOPE	III A 3, II D	WETLAND	21	21							0.00			
1	C	4	132.16	132.27	PEM1/SS1B	FLAT - ORGANIC	III A 2, II D	WETLAND	567	567							0.11			
1	C	4	132.27	132.28	PEM1/SS1C	SLOPE	III A 3, II D	WETLAND	51	51							0.01			
1	C	4	132.28	132.30	PSS1/EM1C	RIVERINE	II C 2, III A 3	WETLAND	101	101							0.02			
1	C	WB-W	132.30	132.32	PSS1/EM1C	RIVERINE	II C 2, III A 3	WETLAND	90	90										0.02
1	C	4	132.32	132.34	PSS1/EM1C	RIVERINE	II C 2, III A 3	WETLAND	105	105							0.02			
1	C	4	132.34	132.53	PSS1/EM1B	FLAT - ORGANIC	II D, III A 2	WETLAND	1025	1025							0.19			
1	C	4	132.53	132.54	U	N/A	II D, III A 1	UPLAND	27		27						0.01			
1	C	4	132.54	132.55	PSS1/EM1B	FLAT - ORGANIC	II D, III A 2	WETLAND	78	78							0.01			
1	C	4	132.55	132.57	U	N/A	II D	UPLAND	103		103						0.02			
1	C	4	132.57	132.58	PSS1/EM1B	FLAT - ORGANIC	II D, III A 2	WETLAND	53	53							0.01			
1	C	4	132.58	132.65	U	N/A	II D	UPLAND	386		386						0.07			
1	C	4	132.65	132.68	PSS1/EM1B	FLAT - ORGANIC	II D, III A 2	WETLAND	160	160							0.03			
1	C	4	132.68	132.70	PSS1/EM1B	SLOPE	II C 2, III A 2	WETLAND	76	76							0.01			
1	C	4	132.70	132.74	PEM1/SS1E	SLOPE	III A 3, II D	WETLAND	206	206							0.04			
1	C	WB-W	132.74	132.74	PEM1/SS1E	SLOPE	III A 3, II D	WETLAND	40	40										0.01
1	C	WB-W	132.74	132.75	PSS1/EM1B	FLAT - ORGANIC	II C 2, III A 2	WETLAND	20	20										0.00
1	C	4	132.75	132.89	PSS1/EM1B	FLAT - ORGANIC	II C 2, III A 2	WETLAND	743	743							0.14			
1	C	4	132.89	132.94	PEM1/SS1B	SLOPE	III A 2, II D 2	WETLAND	296	296							0.06			
1	C	4	132.94	133.43	PEM1/SS1B	FLAT - ORGANIC	III A 2, II C 2	WETLAND	2566	2566							0.49			
1	C	4	133.43	133.46	PEM1/SS1C	SLOPE	III A 3, II D	WETLAND	146	146							0.03			
1	C	4	133.46	135.03	PEM1/SS1B	FLAT - ORGANIC	III A 2, II C 2	WETLAND	8272	8272							1.57			
1	C	4	135.03	135.05	PSS1/EM1B	FLAT - ORGANIC	II D 1, III A 2	WETLAND	150	150							0.03			
1	C	4	135.05	135.10	U	N/A	III A 2, II D 2	UPLAND	226		226						0.04			
1	C	4	135.10	135.10	PEM1/SS1C	FLAT - ORGANIC	III A 2, II D 2	WETLAND	31	31							0.01			
1	C	4	135.10	135.23	U	N/A	III A 2, II D 2	UPLAND	673		673						0.13			
1	C	4	135.23	135.24	PEM1/SS1C	FLAT - ORGANIC	III A 2, II D 2	WETLAND	48	48							0.01			
1	C	4	135.24	135.33	U	N/A	III A 2, II D 2	UPLAND	475		475						0.09			
1	C	4	135.33	135.33	PEM1/SS1C	FLAT - ORGANIC	III A 2, II D 2	WETLAND	25	25							0.00			
1	C	4	135.33	135.35	U	N/A	III A 2, II D 2	UPLAND	77		77						0.01			
1	C	4	135.35	135.38	PEM1/SS1C	FLAT - ORGANIC	III A 2, II D 2	WETLAND	175	175							0.03			
1	C	4	135.38	135.41	U	N/A	III A 2, II D 2	UPLAND	174		174						0.03			
1	C	4	135.41	135.43	PEM1/SS1C	FLAT - ORGANIC	III A 2, II D 2	WETLAND	92	92							0.02			
1	C	4	135.43	135.44	U	N/A	III A 2, II D 2	UPLAND	22		22						0.00			
1	C	4	135.44	135.50	PEM1/SS1C	FLAT - ORGANIC	III A 2, II D 2	WETLAND	340	340							0.06			
1	C	4	135.50	135.51	U	N/A	III A 2, II D 2	UPLAND	70		70						0.01			
1	C	4	135.51	135.55	PEM1/SS1C	FLAT - ORGANIC	III A 2, II D 2	WETLAND	203	203							0.04			
1	C	4	135.55	135.66	U	N/A	III A 2, II D 2	UPLAND	583		583						0.11			
1	C	4	135.66	135.68	U	N/A	II D 1, III A 2	UPLAND	107		107						0.02			
1	C	4	135.68	135.72	U	N/A	II D 1	UPLAND	219		219						0.04			
1	C	4	135.72	135.76	U	N/A	II D 1, III A 2	UPLAND	187		187						0.04			
1	C	4	135.76	135.82	PEM1/SS1C	FLAT - ORGANIC	III A 2, II D 2	WETLAND	335	335							0.06			
1	C	4	135.82	135.91	U	N/A	II D 1, III A 2	UPLAND	451		451						0.09			
1	C	4	135.91	135.91	PEM1/SS1C	SLOPE	III A 2, II D	WETLAND	14	14							0.00			
1	C	4	135.91	135.92	U	N/A	II D 1, III A 2	UPLAND	33		33						0.01			
1	C	4	135.92	135.92	PEM1/SS1C	SLOPE	III A 2, II D	WETLAND	12	12							0.00			
1	C	4	135.92	135.98	U	N/A	II D 1, III A 2	UPLAND	296		296						0.06			

SPREAD	SECTION	ROW MODE	FROM MP	TO MP	NWI CODE	HGM CLASS	VIERECK	DESCRIPTION	LINEAR FEET	WETLAND FEET	UPLAND FEET	DISTURBED FEET	Comments	Mode 1 - Ice Workpad (miles)	Mode 2 - Frost Pack (miles)	Mode 3 - Timber Mats	Mode 4 - Granular Workpad	Mode 5A - Grade	Mode 5B - Mountain Grade	Stream & Flood Plain Crossings
1	C	4	135.98	136.10	PEM1/SS1B	FLAT - ORGANIC	III A 2, II D	WETLAND	647	647							0.12			
1	C	4	136.10	136.11	PEM1/SS1E	SLOPE	III A 3, II C 2	WETLAND	47	47							0.01			
1	C	4	136.11	136.26	PEM1/SS1B	FLAT - ORGANIC	III A 2, II D	WETLAND	813	813							0.15			
1	C	4	136.26	136.27	PEM1/SS1C	SLOPE	III A 2, II D	WETLAND	60	60							0.01			
1	C	4	136.27	136.34	PEM1/SS1B	FLAT - ORGANIC	III A 2, II D	WETLAND	368	368							0.07			
1	C	4	136.34	136.34	PEM1/SS1E	SLOPE	III A 3, II C 2	WETLAND	6	6							0.00			
1	C	4	136.34	136.35	D	N/A	NONE	DISTURBED	22			22					0.00			
1	C	4	136.35	136.38	PEM1/SS1E	SLOPE	III A 3, II C 2	WETLAND	164	164							0.03			
1	C	2	136.38	136.38	PEM1/SS1E	SLOPE	III A 3, II C 2	WETLAND	19	19					0.00					
1	C	2	136.38	136.40	PEM1/SS1F	RIVERINE	III A 3, II C 2	WETLAND	71	71					0.01					
1	C	WB-W	136.40	136.40	PEM1/SS1F	RIVERINE	III A 3, II C 2	WETLAND	19	19										0.00
1	C	WB-W	136.40	136.41	PSS1/EM1B	FLAT - ORGANIC	II C 2, III A 2	WETLAND	41	41										0.01
1	C	4	136.41	136.50	PSS1/EM1B	FLAT - ORGANIC	II C 2, III A 2	WETLAND	480	480							0.09			
1	C	4	136.50	136.51	D	N/A	NONE	DISTURBED	62			62					0.01			
1	C	4	136.51	136.62	PSS1/EM1B	FLAT - ORGANIC	II C 2, III A 2	WETLAND	569	569							0.11			
1	C	4	136.62	136.63	U	N/A	II D	UPLAND	65		65						0.01			
1	C	4	136.63	136.66	PSS1/EM1B	FLAT - ORGANIC	II C 2, III A 2	WETLAND	165	165							0.03			
1	C	4	136.66	136.68	U	N/A	II D	UPLAND	98		98						0.02			
1	C	4	136.68	136.72	PSS1/EM1B	FLAT - ORGANIC	II C 2, III A 2	WETLAND	237	237							0.04			
1	C	4	136.72	136.73	PEM1/SS1E	SLOPE	III A 3, II C 2	WETLAND	4	4							0.00			
1	C	2	136.73	136.74	PEM1/SS1E	SLOPE	III A 3, II C 2	WETLAND	63	63					0.01					
1	C	2	136.74	136.74	PUBH	RIVERINE	NONE	WETLAND	19	19					0.00					
1	C	2	136.74	136.75	PEM1/SS1E	SLOPE	III A 3, II C 2	WETLAND	32	32					0.01					
1	C	2	136.75	136.75	PUBH	RIVERINE	NONE	WETLAND	14	14					0.00					
1	C	2	136.75	136.78	PEM1/SS1E	SLOPE	III A 3, II C 2	WETLAND	172	172					0.03					
1	C	WB-W	136.78	136.79	PEM1/SS1E	SLOPE	III A 3, II C 2	WETLAND	60	60										0.01
1	C	4	136.79	136.85	PEM1/SS1E	SLOPE	III A 3, II C 2	WETLAND	276	276							0.05			
1	C	4	136.85	137.20	PEM1/SS1B	FLAT - ORGANIC	III A 2, II D	WETLAND	1878	1878							0.36			
1	C	4	137.20	137.20	PEM1/SS1C	FLAT - ORGANIC	III A 2, II D	WETLAND	11	11							0.00			
1	C	4	137.20	137.20	PEM1/SS1E	SLOPE	III A 3, II C 2	WETLAND	5	5							0.00			
1	C	4	137.20	137.21	PEM1/SS1C	FLAT - ORGANIC	III A 2, II D	WETLAND	38	38							0.01			
1	C	4	137.21	137.21	PEM1/SS1E	SLOPE	III A 3, II C 2	WETLAND	12	12							0.00			
1	C	2	137.21	137.22	PEM1/SS1E	SLOPE	III A 3, II C 2	WETLAND	30	30					0.01					
1	C	WB-W	137.22	137.23	PEM1/SS1E	SLOPE	III A 3, II C 2	WETLAND	60	60										0.01
1	C	2	137.23	137.24	PEM1/SS1E	SLOPE	III A 3, II C 2	WETLAND	45	45					0.01					
1	C	2	137.24	137.24	PEM1/SS1B	FLAT - ORGANIC	III A 2, II D 3	WETLAND	15	15					0.00					
1	C	4	137.24	137.27	PEM1/SS1B	FLAT - ORGANIC	III A 2, II D 3	WETLAND	164	164							0.03			
1	C	4	137.27	137.29	U	N/A	II D	UPLAND	85		85						0.02			
1	C	4	137.29	137.38	PEM1/SS1B	FLAT - ORGANIC	III A 2, II D 3	WETLAND	503	503							0.10			
1	C	4	137.38	137.40	U	N/A	II D	UPLAND	92		92						0.02			
1	C	4	137.40	137.43	U	N/A	II D	UPLAND	141		141						0.03			
1	C	4	137.43	137.65	PEM1/SS1B	FLAT - ORGANIC	III A 2, II D 3	WETLAND	1152	1152							0.22			
1	C	4	137.65	137.66	PEM1/SS1E	SLOPE	III A 3, II D 3	WETLAND	55	55							0.01			
1	C	4	137.66	137.71	PEM1/SS1B	FLAT - ORGANIC	III A 2, II D 3	WETLAND	267	267							0.05			
1	C	WB-W	137.71	137.71	PEM1/SS1B	FLAT - ORGANIC	III A 2, II D 3	WETLAND	17	17										0.00
1	C	WB-W	137.71	137.72	PEM1/SS1E	RIVERINE	III A 3, II C 2	WETLAND	43	43										0.01
1	C	4	137.72	137.72	PEM1/SS1E	RIVERINE	III A 3, II C 2	WETLAND	2	2							0.00			
1	C	4	137.72	138.06	PSS1/EM1B	FLAT - ORGANIC	II C 2, III A 2	WETLAND	1816	1816							0.34			
1	C	4	138.06	138.08	U	N/A	II D	UPLAND	66		66						0.01			
1	C	4	138.08	138.41	PSS1/EM1B	FLAT - ORGANIC	II C 2, III A 2	WETLAND	1745	1745							0.33			
1	C	4	138.41	138.76	PSS1/EM1B	FLAT - ORGANIC	II C 2, III A 2	WETLAND	1858	1858							0.35			
1	C	4	138.76	138.77	PEM1/SS1E	SLOPE	III A 2, II C 2	WETLAND	72	72							0.01			
1	C	4	138.77	138.90	PSS1/EM1B	FLAT - ORGANIC	II C 2, III A 2	WETLAND	669	669							0.13			
1	C	4	138.90	138.91	PEM1/SS1E	SLOPE	III A 2, II C 2	WETLAND	32	32							0.01			
1	C	4	138.91	138.93	PSS1/EM1B	FLAT - ORGANIC	II C 2, III A 2	WETLAND	119	119							0.02			
1	C	4	138.93	138.94	PEM1/SS1E	SLOPE	III A 2, II C 2	WETLAND	74	74							0.01			
1	C	4	138.94	139.01	PSS1/EM1B	FLAT - ORGANIC	II C 2, III A 2	WETLAND	364	364							0.07			
1	C	4	139.01	139.07	PEM1/SS1E	SLOPE	III A 2, II C 2	WETLAND	294	294							0.06			
1	C	4	139.07	139.21	PSS1/EM1B	FLAT - ORGANIC	II C 2, III A 2	WETLAND	768	768							0.15			
1	C	4	139.21	139.22	PEM1/SS1E	SLOPE	III A 2, II C 2	WETLAND	57	57							0.01			
1	C	4	139.22	139.34	PSS1/EM1B	SLOPE	II C 2, III A 2	WETLAND	601	601							0.11			
1	C	4	139.34	139.37	PSS1/EM1B	FLAT - ORGANIC	II C 2, III A 2	WETLAND	155	155							0.03			
1	C	4	139.37	139.37	PEM1/SS1E	SLOPE	III A 2, II C 2	WETLAND	48	48							0.01			
1	C	4	139.37	139.43	PSS1/EM1B	FLAT - ORGANIC	II C 2, III A 2	WETLAND	315	315							0.06			
1	C	4	139.43	139.44	PEM1/SS1C	SLOPE	III A 2, II C 2	WETLAND	14	14							0.00			
1	C	4	139.44	139.55	PSS1/EM1B	FLAT - ORGANIC	II C 2, III A 2	WETLAND	592	592							0.11			
1	C	4	139.55	139.55	PEM1/SS1E	SLOPE	III A 2, II C 2	WETLAND	29	29							0.01			
1	C	4	139.55	139.64	PSS1/EM1B	FLAT - ORGANIC	II C 2, III A 2	WETLAND	447	447							0.08			
1	C	4	139.64	139.65	PEM1/SS1E	SLOPE	III A 2, II C 2	WETLAND	34	34							0.01			
1	C	4	139.65	139.79	PSS1/EM1B	FLAT - ORGANIC	II C 2, III A 2	WETLAND	781	781							0.15			
1	C	4	139.79	139.81	PEM1/SS1C	FLAT - ORGANIC	III A 2, II C 2	WETLAND	99	99							0.02			
1	C	4	139.81	139.85	PSS1/EM1B	FLAT - ORGANIC	II C 2, III A 2	WETLAND	177	177							0.03			

SPREAD	SECTION	ROW MODE	FROM MP	TO MP	NWI CODE	HGM CLASS	VIERECK	DESCRIPTION	LINEAR FEET	WETLAND FEET	UPLAND FEET	DISTURBED FEET	Comments	Mode 1 - Ice Workpad (miles)	Mode 2 - Frost Pack (miles)	Mode 3 - Timber Mats	Mode 4 - Granular Workpad	Mode 5A - Grade	Mode 5B - Mountain Grade	Stream & Flood Plain Crossings
1	C	4	139.85	139.85	PEM1/SS1E	SLOPE	III A 2, II C 2	WETLAND	20	20							0.00			
1	C	4	139.85	139.86	PSS1/EM1B	FLAT - ORGANIC	II C 2, III A 2	WETLAND	54	54							0.01			
1	C	4	139.86	139.87	PEM1/SS1E	SLOPE	III A 2, II C 2	WETLAND	48	48							0.01			
1	C	4	139.87	139.91	PSS1/EM1B	FLAT - ORGANIC	II C 2, III A 2	WETLAND	209	209							0.04			
1	C	4	139.91	139.93	PEM1/SS1C	SLOPE	III A 2, II C 2	WETLAND	125	125							0.02			
1	C	4	139.93	140.03	PSS1/EM1B	FLAT - ORGANIC	II C 2, III A 2	WETLAND	506	506							0.10			
1	C	4	140.03	140.05	PEM1/SS1E	SLOPE	III A 2, II C 2	WETLAND	107	107							0.02			
1	C	4	140.05	140.23	PSS1/EM1B	FLAT - ORGANIC	II C 2, III A 2	WETLAND	974	974							0.18			
1	C	4	140.23	140.24	PEM1/SS1E	SLOPE	III A 2, II C 2	WETLAND	28	28							0.01			
1	C	4	140.24	140.28	PSS1/EM1B	FLAT - ORGANIC	II C 2, III A 2	WETLAND	244	244							0.05			
1	C	4	140.28	140.29	PEM1/SS1E	SLOPE	III A 3, II C 2	WETLAND	50	50							0.01			
1	C	4	140.29	140.33	PSS1/EM1B	FLAT - ORGANIC	II C 2, III A 2	WETLAND	201	201							0.04			
1	C	4	140.33	140.34	PEM1/SS1E	SLOPE	III A 3, II C 2	WETLAND	58	58							0.01			
1	C	4	140.34	140.53	PSS1/EM1B	FLAT - ORGANIC	II C 2, III A 2	WETLAND	963	963							0.18			
1	C	4	140.53	140.55	PEM1/SS1E	SLOPE	III A 3, II C 2	WETLAND	129	129							0.02			
1	C	4	140.55	141.06	PSS1/EM1B	FLAT - ORGANIC	II C 2, III A 2	WETLAND	2683	2683							0.51			
1	C	4	141.06	141.09	PEM1/SS1E	SLOPE	III A 2, II C 2	WETLAND	170	170							0.03			
1	C	4	141.09	141.23	PSS1/EM1B	FLAT - ORGANIC	II C 2, III A 2	WETLAND	739	739							0.14			
1	C	4	141.23	141.24	D	N/A	NONE	DISTURBED	51			51					0.01			
1	C	4	141.24	141.33	PSS1/EM1B	FLAT - ORGANIC	II C 2, III A 2	WETLAND	459	459							0.09			
1	C	4	141.33	141.35	PEM1/SS1E	SLOPE	III A 3, II D	WETLAND	143	143							0.03			
1	C	4	141.35	141.36	PSS1/EM1B	FLAT - ORGANIC	II C 2, III A 2	WETLAND	35	35							0.01			
1	C	4	141.36	141.37	PEM1/SS1E	SLOPE	III A 3, II D	WETLAND	32	32							0.01			
1	C	4	141.37	141.50	PSS1/EM1B	FLAT - ORGANIC	II C 2, III A 2	WETLAND	682	682							0.13			
1	C	4	141.50	141.51	PEM1/SS1C	FLAT - ORGANIC	III A 3, II D	WETLAND	51	51							0.01			
1	C	4	141.51	141.55	PEM1/SS1E	SLOPE	III A 2, II C 2	WETLAND	208	208							0.04			
1	C	4	141.55	141.56	PEM1/SS1C	FLAT - ORGANIC	III A 3, II D	WETLAND	100	100							0.02			
1	C	4	141.56	141.58	PSS1/EM1B	FLAT - ORGANIC	II C 2, III A 2	WETLAND	104	104							0.02			
1	C	4	141.58	141.59	PEM1/SS1C	FLAT - ORGANIC	III A 3, II D	WETLAND	55	55							0.01			
1	C	4	141.59	141.63	PEM1/SS1E	SLOPE	III A 2, II C 2	WETLAND	189	189							0.04			
1	C	4	141.63	141.66	PSS1/EM1B	FLAT - ORGANIC	II C 2, III A 2	WETLAND	175	175							0.03			
1	C	4	141.66	141.73	PEM1/SS1E	SLOPE	III A 2, II C 2	WETLAND	352	352							0.07			
1	C	4	141.73	141.75	PEM1/SS1C	FLAT - ORGANIC	III A 2, II D	WETLAND	94	94							0.02			
1	C	4	141.75	141.84	PEM1/SS1E	SLOPE	III A 3, II D	WETLAND	483	483							0.09			
1	C	WB-W	141.84	141.86	PEM1/SS1E	SLOPE	III A 3, II D	WETLAND	87	87										0.02
1	C	WB-W	141.86	141.86	PEM1/SS1C	FLAT - ORGANIC	III A 2, II D	WETLAND	3	3										0.00
1	C	4	141.86	141.96	PEM1/SS1C	FLAT - ORGANIC	III A 2, II D	WETLAND	534	534							0.10			
1	C	4	141.96	141.96	PUBH	DEPRESSIONAL	NONE	WETLAND	7	7							0.00			
1	C	4	141.96	141.98	PEM1/SS1C	FLAT - ORGANIC	III A 2, II D	WETLAND	131	131							0.02			
1	C	4	141.98	142.04	PSS1/EM1B	FLAT - ORGANIC	II C 2, III A 2	WETLAND	314	314							0.06			
1	C	4	142.04	142.07	PSS1/EM1B	FLAT - ORGANIC	II C 2, III A 2	WETLAND	143	143							0.03			
1	C	4	142.07	142.10	U	N/A	II D	UPLAND	135		135						0.03			
1	C	4	142.10	142.55	PSS1/EM1B	FLAT - ORGANIC	II C 2, III A 2	WETLAND	2397	2397							0.45			
1	C	4	142.55	142.58	PSS1/EM1E	SLOPE	II C 2, III A 3	WETLAND	150	150							0.03			
1	C	WB-W	142.58	142.58	PSS1/EM1E	SLOPE	II C 2, III A 3	WETLAND	28	28										0.01
1	C	WB-W	142.58	142.59	PSS1/EM1B	FLAT - ORGANIC	II C 2, III A 2	WETLAND	62	62										0.01
1	C	4	142.59	142.91	PSS1/EM1B	FLAT - ORGANIC	II C 2, III A 2	WETLAND	1679	1679							0.32			
1	C	4	142.91	142.93	PEM1/SS1C	SLOPE	III A 2, II D	WETLAND	106	106							0.02			
1	C	4	142.93	142.97	PSS1/EM1B	FLAT - ORGANIC	II C 2, III A 2	WETLAND	199	199							0.04			
1	C	4	142.97	142.98	PEM1/SS1C	SLOPE	III A 2, II D	WETLAND	58	58							0.01			
1	C	4	142.98	143.04	PSS1/EM1B	FLAT - ORGANIC	II C 2, III A 2	WETLAND	304	304							0.06			
1	C	4	143.04	143.04	PSS1/EM1B	FLAT - ORGANIC	II C 2, III A 2	WETLAND	0	0							0.00			
1	C	4	143.04	143.04	PSS1/EM1B	FLAT - ORGANIC	II C 2, III A 2	WETLAND	25	25							0.00			
1	C	4	143.04	143.05	PEM1/SS1C	SLOPE	III A 2, II D	WETLAND	42	42							0.01			
1	C	4	143.05	143.10	PSS1/EM1B	FLAT - ORGANIC	II C 2, III A 2	WETLAND	248	248							0.05			
1	C	4	143.10	143.18	PSS1/EM1B	FLAT - ORGANIC	II C 2, III A 2	WETLAND	455	455							0.09			
1	C	4	143.18	143.19	PSS1A	RIVERINE	II C 2	WETLAND	34	34							0.01			
1	C	WB-W	143.19	143.20	PSS1A	RIVERINE	II C 2	WETLAND	42	42										0.01
1	C	WB-W	143.20	143.20	PSS1/EM1B	FLAT - ORGANIC	II C 2, III A 2	WETLAND	18	18										0.00
1	C	4	143.20	143.42	PSS1/EM1B	FLAT - ORGANIC	II C 2, III A 2	WETLAND	1149	1149							0.22			
1	C	4	143.42	143.49	PEM1/SS1C	SLOPE	III A 2, II D	WETLAND	389	389							0.07			
1	C	4	143.49	143.58	PEM1/SS1B	FLAT - ORGANIC	III A 2, II D 3	WETLAND	478	478							0.09			
1	C	4	143.58	143.59	PEM1/SS1C	SLOPE	III A 2, II D	WETLAND	21	21							0.00			
1	C	4	143.59	143.70	PEM1/SS1B	FLAT - ORGANIC	III A 2, II D 3	WETLAND	615	615							0.12			
1	C	4	143.70	143.72	PEM1/SS1C	SLOPE	III A 2, II D	WETLAND	65	65							0.01			
1	C	4	143.72	143.77	PEM1/SS1B	FLAT - ORGANIC	III A 2, II D 3	WETLAND	270	270							0.05			
1	C	4	143.77	143.78	PEM1/SS1C	SLOPE	III A 2, II D	WETLAND	64	64							0.01			
1	C	4	143.78	143.84	PEM1/SS1B	FLAT - ORGANIC	III A 2, II D 3	WETLAND	300	300							0.06			
1	C	4	143.84	143.85	U	N/A	II C 2, III A 1	UPLAND	77		77						0.01			
1	C	4	143.85	143.92	PEM1/SS1B	FLAT - ORGANIC	III A 2, II D 3	WETLAND	371	371							0.07			
1	C	4	143.92	143.94	PEM1/SS1C	SLOPE	III A 2, II D	WETLAND	117	117							0.02			
1	C	4	143.94	144.04	PEM1/SS1B	FLAT - ORGANIC	III A 2, II D 3	WETLAND	523	523							0.10			

SPREAD	SECTION	ROW MODE	FROM MP	TO MP	NWI CODE	HGM CLASS	VIERECK	DESCRIPTION	LINEAR FEET	WETLAND FEET	UPLAND FEET	DISTURBED FEET	Comments	Mode 1 - Ice Workpad (miles)	Mode 2 - Frost Pack (miles)	Mode 3 - Timber Mats	Mode 4 - Granular Workpad	Mode 5A - Grade	Mode 5B - Mountain Grade	Stream & Flood Plain Crossings
1	C	4	144.04	144.05	PEM1/SS1C	SLOPE	III A 2, II D	WETLAND	22	22							0.00			
1	C	4	144.05	144.08	PEM1/SS1B	FLAT - ORGANIC	III A 2, II D 3	WETLAND	184	184							0.03			
1	C	4	144.08	144.09	PEM1/SS1C	SLOPE	III A 2, II D	WETLAND	50	50							0.01			
1	C	4	144.09	144.11	PEM1/SS1B	FLAT - ORGANIC	III A 2, II D 3	WETLAND	123	123							0.02			
1	C	4	144.11	144.13	PEM1/SS1C	SLOPE	III A 2, II D	WETLAND	66	66							0.01			
1	C	4	144.13	144.20	PEM1/SS1B	FLAT - ORGANIC	III A 2, II D 3	WETLAND	408	408							0.08			
1	C	4	144.20	144.21	PEM1/SS1C	SLOPE	III A 2, II D	WETLAND	35	35							0.01			
1	C	4	144.21	144.26	PEM1/SS1B	FLAT - ORGANIC	III A 2, II D 3	WETLAND	232	232							0.04			
1	C	4	144.26	144.26	PEM1/SS1C	SLOPE	III A 2, II D	WETLAND	10	10							0.00			
1	C	4	144.26	144.49	PEM1/SS1B	FLAT - ORGANIC	III A 2, II D 3	WETLAND	1251	1251							0.24			
1	C	4	144.49	144.51	PEM1/SS1C	SLOPE	III A 2, II D 3	WETLAND	68	68							0.01			
1	C	4	144.51	144.52	PEM1/SS1B	FLAT - ORGANIC	III A 2, II D 3	WETLAND	81	81							0.02			
1	C	4	144.52	144.59	PEM1/SS1C	SLOPE	III A 2, II D 3	WETLAND	371	371							0.07			
1	C	4	144.59	144.64	PEM1/SS1B	FLAT - ORGANIC	III A 2, II D 3	WETLAND	231	231							0.04			
1	C	4	144.64	144.83	PEM1/SS1E	DEPRESSIONAL	III A 3, II C 2	WETLAND	1013	1013							0.19			
1	C	4	144.83	144.97	PEM1/SS1B	FLAT - ORGANIC	III A 2, II D 3	WETLAND	755	755							0.14			
1	C	4	144.97	144.98	U	N/A	II C 2, III A 1	UPLAND	29		29						0.01			
1	C	4	144.98	145.17	PEM1/SS1B	FLAT - ORGANIC	III A 2, II D 3	WETLAND	998	998							0.19			
1	C	4	145.17	145.19	U	N/A	II D	UPLAND	132		132						0.02			
1	C	WB-W	145.19	145.20	U	N/A	II D	UPLAND	42		42									0.01
1	C	WB-W	145.20	145.26	R3UBH	RIVERINE	NONE	WETLAND	320	320										0.06
1	C	WB-W	145.26	145.27	PSS1/EM1C	RIVERINE	II C 2, III A 2	WETLAND	45	45										0.01
1	C	WB-W	145.27	145.27	PSS1/EM1C	SLOPE	II D 3, III A 3	WETLAND	14	14										0.00
1	C	4	145.27	145.31	PSS1/EM1C	SLOPE	II D 3, III A 3	WETLAND	216	216							0.04			
1	C	4	145.31	145.42	PEM1/SS1B	FLAT - ORGANIC	III A 2, II D 3	WETLAND	566	566							0.11			
1	C	4	145.42	145.43	U	N/A	II D, II C 2	UPLAND	39		39						0.01			
1	C	4	145.43	145.43	PEM1/SS1B	FLAT - ORGANIC	III A 2, II D 3	WETLAND	37	37							0.01			
1	C	4	145.43	145.49	U	N/A	II D, II C 2	UPLAND	276		276						0.05			
1	C	4	145.49	145.50	D	N/A	NONE	DISTURBED	74			74					0.01			
1	C	4	145.50	145.52	PSS1/EM1B	FLAT - ORGANIC	II D, III A 2	WETLAND	108	108							0.02			
1	C	4	145.52	145.57	PSS1/EM1C	SLOPE	II D 3, III A 3	WETLAND	272	272							0.05			
1	C	4	145.57	145.63	PSS1/EM1B	FLAT - ORGANIC	II D, III A 2	WETLAND	311	311							0.06			
1	C	4	145.63	145.73	U	N/A	II D	UPLAND	520		520						0.10			
1	C	4	145.73	145.78	PEM1/SS1B	FLAT - ORGANIC	III A 2, II D 3	WETLAND	261	261							0.05			
1	C	4	145.78	145.83	U	N/A	II D	UPLAND	283		283						0.05			
1	C	4	145.83	145.95	PEM1/SS1B	FLAT - ORGANIC	III A 2, II D 3	WETLAND	649	649							0.12			
1	C	4	145.95	145.96	PUBH	DEPRESSIONAL	NONE	WETLAND	33	33							0.01			
1	C	4	145.96	146.06	PEM1/SS1B	FLAT - ORGANIC	III A 2, II D 3	WETLAND	524	524							0.10			
1	C	4	146.06	146.17	U	N/A	II D	UPLAND	567		567						0.11			
1	C	4	146.17	146.21	PEM1/SS1B	FLAT - ORGANIC	III A 2, II D	WETLAND	218	218							0.04			
1	C	4	146.21	146.46	PEM1/SS1B	SLOPE	III A 2, II D	WETLAND	1342	1342							0.25			
1	C	4	146.46	146.48	U	N/A	II D, II C 2	UPLAND	82		82						0.02			
1	C	4	146.48	146.51	PSS1/EM1B	FLAT - ORGANIC	II C 2, III A 2	WETLAND	159	159							0.03			
1	C	4	146.51	146.55	U	N/A	II D, II C 2	UPLAND	212		212						0.04			
1	C	5A	146.55	146.56	U	N/A	II D, II C 2	UPLAND	60		60							0.01		
1	C	4	146.56	146.58	U	N/A	II D, II C 2	UPLAND	120		120						0.02			
1	C	5A	146.58	146.60	U	N/A	II D, II C 2	UPLAND	90		90							0.02		
1	C	4	146.60	146.61	U	N/A	II D, II C 2	UPLAND	43		43						0.01			
1	C	4	146.61	146.64	PEM1/SS1B	FLAT - ORGANIC	III A 2, II D	WETLAND	160	160							0.03			
1	C	4	146.64	146.65	U	N/A	II D, II C 2	UPLAND	79		79						0.01			
1	C	4	146.65	146.71	PEM1/SS1B	SLOPE	III A 2, II D	WETLAND	287	287							0.05			
1	C	4	146.71	146.72	U	N/A	II D, II C 2	UPLAND	62		62						0.01			
1	C	5A	146.72	146.74	U	N/A	II D, II C 2	UPLAND	90		90							0.02		
1	C	4	146.74	146.77	U	N/A	II D, II C 2	UPLAND	199		199						0.04			
1	C	4	146.77	146.79	PEM1/SS1B	SLOPE	III A 2, II D	WETLAND	73	73							0.01			
1	C	4	146.79	146.81	PEM1E	SLOPE	III A 3	WETLAND	130	130							0.02			
1	C	4	146.81	146.83	PEM1/SS1B	FLAT - ORGANIC	III A 2, II D	WETLAND	69	69							0.01			
1	C	4	146.83	146.86	PEM1E	SLOPE	III A 3	WETLAND	159	159							0.03			
1	C	WB-W	146.86	146.86	PEM1E	SLOPE	III A 3	WETLAND	16	16										0.00
1	C	WB-W	146.86	146.86	U	N/A	II C 2, II D	UPLAND	17		17									0.00
1	C	WB-W	146.86	146.86	R4SBC	RIVERINE	NONE	WETLAND	9	9										0.00
1	C	WB-W	146.86	146.87	U	N/A	II C 2, II D	UPLAND	33		33									0.01
1	C	WB-W	146.87	146.87	PEM1B	SLOPE	III A 2	WETLAND	15	15										0.00
1	C	4	146.87	146.88	PEM1B	SLOPE	III A 2	WETLAND	63	63							0.01			
1	C	4	146.88	146.89	PEM1/SS1C	SLOPE	III A 3, II D	WETLAND	25	25							0.00			
1	C	4	146.89	146.90	PEM1B	SLOPE	III A 2	WETLAND	37	37							0.01			
1	C	4	146.90	146.90	PEM1/SS1C	SLOPE	III A 3, II D	WETLAND	16	16							0.00			
1	C	4	146.90	146.92	PEM1B	SLOPE	III A 2	WETLAND	112	112							0.02			
1	C	4	146.92	146.94	U	N/A	II C 2, II D	UPLAND	77		77						0.01			
1	C	WB-W	146.94	146.94	U	N/A	II C 2, II D	UPLAND	27		27									0.01
1	C	WB-W	146.94	146.94	R4SBC	RIVERINE	NONE	WETLAND	12	12										0.00
1	C	WB-W	146.94	146.95	U	N/A	II C 2, II D	UPLAND	21		21									0.00

SPREAD	SECTION	ROW MODE	FROM MP	TO MP	NWI CODE	HGM CLASS	VIERECK	DESCRIPTION	LINEAR FEET	WETLAND FEET	UPLAND FEET	DISTURBED FEET	Comments	Mode 1 - Ice Workpad (miles)	Mode 2 - Frost Pack (miles)	Mode 3 - Timber Mats	Mode 4 - Granular Workpad	Mode 5A - Grade	Mode 5B - Mountain Grade	Stream & Flood Plain Crossings
1	C	4	146.95	146.95	U	N/A	II C 2, II D	UPLAND	11		11						0.00			
1	C	4	146.95	146.97	PEM1/SS1B	SLOPE	III A 2, II D	WETLAND	113	113							0.02			
1	C	4	146.97	146.98	PEM1/SS1C	SLOPE	III A 3, II D	WETLAND	41	41							0.01			
1	C	4	146.98	147.06	PEM1/SS1B	SLOPE	III A 2, II D	WETLAND	444	444							0.08			
1	C	4	147.06	147.08	PEM1/SS1E	SLOPE	III A 3, II D	WETLAND	70	70							0.01			
1	C	4	147.08	147.09	PEM1/SS1B	SLOPE	III A 2, II D	WETLAND	81	81							0.02			
1	C	4	147.09	147.11	PEM1/SS1E	SLOPE	III A 3, II D	WETLAND	80	80							0.02			
1	C	4	147.11	147.11	PEM1/SS1B	SLOPE	III A 2, II D	WETLAND	32	32							0.01			
1	C	4	147.11	147.12	PEM1/SS1E	SLOPE	III A 3, II D	WETLAND	55	55							0.01			
1	C	4	147.12	147.15	PEM1/SS1B	SLOPE	III A 3, II D	WETLAND	149	149							0.03			
1	C	4	147.15	147.16	PEM1/SS1E	SLOPE	III A 3, II D	WETLAND	27	27							0.01			
1	C	4	147.16	147.29	PEM1/SS1B	SLOPE	III A 2, II D	WETLAND	710	710							0.13			
1	C	4	147.29	147.30	PEM1/SS1C	SLOPE	III A 2, II D	WETLAND	46	46							0.01			
1	C	4	147.30	147.31	PEM1/SS1B	SLOPE	III A 2, II D	WETLAND	60	60							0.01			
1	C	4	147.31	147.33	PEM1/SS1C	SLOPE	III A 2, II D	WETLAND	120	120							0.02			
1	C	4	147.33	147.36	PEM1/SS1B	SLOPE	III A 2, II D	WETLAND	147	147							0.03			
1	C	4	147.36	147.46	PEM1/SS1C	SLOPE	III A 2, II D	WETLAND	515	515							0.10			
1	C	4	147.46	147.82	PEM1/SS1B	FLAT - ORGANIC	III A 2, II D	WETLAND	1898	1898							0.36			
1	C	4	147.82	147.83	U	N/A	II D, II C 2	UPLAND	72		72						0.01			
1	C	4	147.83	148.08	PEM1/SS1B	FLAT - ORGANIC	III A 2, II D	WETLAND	1317	1317							0.25			
1	C	4	148.08	148.08	PEM1/SS1C	SLOPE	III A 2, II D	WETLAND	18	18							0.00			
1	C	4	148.08	148.09	PSS1/EM1B	FLAT - ORGANIC	II D 3, III A 2	WETLAND	24	24							0.00			
1	C	WB-W	148.09	148.09	PSS1/EM1B	FLAT - ORGANIC	II D 3, III A 2	WETLAND	14	14										0.00
1	C	WB-W	148.09	148.09	PEM1/SS1C	SLOPE	III A 2, II D	WETLAND	18	18										0.00
1	C	WB-W	148.09	148.11	PEM1/SS1B	FLAT - ORGANIC	III A 2, II D	WETLAND	57	57										0.01
1	C	4	148.11	148.11	PEM1/SS1B	FLAT - ORGANIC	III A 2, II D	WETLAND	31	31							0.01			
1	C	4	148.11	148.12	PEM1/SS1B	SLOPE	III A 2, II D	WETLAND	35	35							0.01			
1	C	4	148.12	148.13	PEM1/SS1B	FLAT - ORGANIC	III A 2, II D	WETLAND	47	47							0.01			
1	C	4	148.13	148.16	PEM1/SS1B	SLOPE	III A 2, II D	WETLAND	168	168							0.03			
1	C	4	148.16	148.16	PSS1/EM1C	SLOPE	II D 3, III A 2	WETLAND	28	28							0.01			
1	C	4	148.16	148.19	PSS1/EM1B	FLAT - ORGANIC	II D 3, III A 2	WETLAND	145	145							0.03			
1	C	4	148.19	148.19	PSS1/EM1C	SLOPE	II D 3, III A 2	WETLAND	15	15							0.00			
1	C	4	148.19	148.23	PSS1/EM1B	FLAT - ORGANIC	II D 3, III A 2	WETLAND	165	165							0.03			
1	C	4	148.23	148.24	D	N/A	NONE	DISTURBED	98			98					0.02			
1	C	4	148.24	148.34	PSS1/EM1B	FLAT - ORGANIC	II D 3, III A 2	WETLAND	510	510							0.10			
1	C	4	148.34	148.37	PEM1/SS1C	SLOPE	III A 2, II D	WETLAND	138	138							0.03			
1	C	WB-W	148.37	148.38	PEM1/SS1C	SLOPE	III A 2, II D	WETLAND	60	60										0.01
1	C	4	148.38	148.38	PEM1/SS1C	SLOPE	III A 2, II D	WETLAND	21	21							0.00			
1	C	4	148.38	148.43	PSS1/EM1B	FLAT - ORGANIC	II D 3, III A 2	WETLAND	267	267							0.05			
1	C	4	148.43	148.44	U	N/A	II D	UPLAND	42		42						0.01			
1	C	5A	148.44	148.66	U	N/A	II D	UPLAND	1141		1141							0.22		
1	C	5A	148.66	148.69	U	N/A	II C 2, II B 2	UPLAND	196		196							0.04		
1	C	5A	148.69	148.70	PSS1/EM1B	SLOPE	II D 3, III A 2	WETLAND	19	19								0.00		
1	C	5A	148.70	148.75	U	N/A	II C 2, II B 2	UPLAND	267		267							0.05		
1	C	5A	148.75	148.76	D	N/A	NONE	DISTURBED	37			37						0.01		
1	C	5A	148.76	148.76	U	N/A	II C 2, II B 2	UPLAND	16		16							0.00		
1	C	5A	148.76	148.76	R4SBA	RIVERINE	NONE	WETLAND	3	3								0.00		
1	C	WB-W	148.76	148.79	R4SBA	RIVERINE	NONE	WETLAND	175	175										0.03
1	C	WB-W	148.79	148.79	U	N/A	II D	UPLAND	5		5									0.00
1	C	5A	148.79	149.01	U	N/A	II D	UPLAND	1171		1171							0.22		
1	C	5A	149.01	149.02	D	N/A	NONE	DISTURBED	20			20						0.00		
1	C	5A	149.02	149.09	U	N/A	II D	UPLAND	387		387							0.07		
1	C	5A	149.09	149.11	PSS1C	SLOPE	II D 3, II C 2	WETLAND	106	106								0.02		
1	C	5A	149.11	149.17	U	N/A	II D	UPLAND	285		285							0.05		
1	C	5A	149.17	149.25	PSS1C	SLOPE	II D 3, II C 2	WETLAND	444	444								0.08		
1	C	5A	149.25	149.26	PEM1/SS1E	SLOPE	III A 3, II C 2	WETLAND	79	79								0.01		
1	C	5A	149.26	149.30	PEM1/SS1C	FLAT - ORGANIC	III A 2, II D 3	WETLAND	176	176								0.03		
1	C	5A	149.30	149.30	PEM1/SS1E	SLOPE	III A 3, II C 2	WETLAND	31	31								0.01		
1	C	5A	149.30	149.33	PEM1/SS1B	FLAT - ORGANIC	III A 2, II D 3	WETLAND	124	124								0.02		
1	C	5A	149.33	149.34	D	N/A	NONE	DISTURBED	78			78						0.01		
1	C	5A	149.34	149.40	PEM1/SS1C	SLOPE	III A 2, II D 2	WETLAND	280	280								0.05		
1	C	4	149.40	149.40	PEM1/SS1C	SLOPE	III A 2, II D 2	WETLAND	33	33							0.01			
1	C	4	149.40	149.46	PEM1/SS1B	FLAT - ORGANIC	III A 2, II D 2	WETLAND	300	300							0.06			
1	C	4	149.46	149.55	PEM1E	SLOPE	III A 3	WETLAND	506	506							0.10			
1	C	4	149.55	149.56	PEM1/SS1B	FLAT - ORGANIC	III A 2, II D 3	WETLAND	23	23							0.00			
1	C	4	149.56	149.59	PEM1E	SLOPE	III A 3	WETLAND	162	162							0.03			
1	C	4	149.59	149.62	PEM1B	FLAT - ORGANIC	III A 2	WETLAND	175	175							0.03			
1	C	4	149.62	149.79	PEM1E	SLOPE	III A 3	WETLAND	859	859							0.16			
1	C	4	149.79	149.79	PUBH	DEPRESSIONAL	NONE	WETLAND	12	12							0.00			
1	C	4	149.79	149.79	PUBH	DEPRESSIONAL	NONE	WETLAND	26	26							0.00			
1	C	4	149.79	149.79	PEM1E	SLOPE	III A 3	WETLAND	4	4							0.00			
1	C	4	149.79	149.85	PEM1E	SLOPE	III A 3	WETLAND	287	287							0.05			

SPREAD	SECTION	ROW MODE	FROM MP	TO MP	NWI CODE	HGM CLASS	VIERECK	DESCRIPTION	LINEAR FEET	WETLAND FEET	UPLAND FEET	DISTURBED FEET	Comments	Mode 1 - Ice Workpad (miles)	Mode 2 - Frost Pack (miles)	Mode 3 - Timber Mats	Mode 4 - Granular Workpad	Mode 5A - Grade	Mode 5B - Mountain Grade	Stream & Flood Plain Crossings
1	C	4	149.85	149.89	PEM1/SS1C	SLOPE	III A 2, II D	WETLAND	237	237							0.04			
1	C	4	149.89	149.91	PSS1B	FLAT - ORGANIC	II D	WETLAND	116	116							0.02			
1	C	4	149.91	149.94	PEM1/SS1C	SLOPE	III A 2, II D	WETLAND	162	162							0.03			
1	C	4	149.94	150.04	PEM1B	FLAT - ORGANIC	III A 2	WETLAND	488	488							0.09			
1	C	4	150.04	150.06	PEM1B	SLOPE	III A 2	WETLAND	107	107							0.02			
1	C	4	150.06	150.09	PEM1B	FLAT - ORGANIC	III A 2	WETLAND	154	154							0.03			
1	C	4	150.09	150.09	PEM1B	SLOPE	III A 2	WETLAND	40	40							0.01			
1	C	WB-W	150.09	150.09	PEM1B	SLOPE	III A 2	WETLAND	1	1										0.00
1	C	WB-W	150.09	150.10	PEM1C	SLOPE	III A 3	WETLAND	23	23										0.00
1	C	WB-W	150.10	150.11	PEM1E	SLOPE	III A 3	WETLAND	35	35										0.01
1	C	4	150.11	150.18	PEM1E	SLOPE	III A 3	WETLAND	395	395							0.07			
1	C	4	150.18	150.23	PSS1/EM1B	FLAT - ORGANIC	II C 2, III A 2	WETLAND	244	244							0.05			
1	C	4	150.23	150.24	PEM1E	SLOPE	III A 3	WETLAND	85	85							0.02			
1	C	4	150.24	150.33	PEM1/SS1B	FLAT - ORGANIC	III A 2, II D	WETLAND	450	450							0.09			
1	C	4	150.33	150.33	PSS1C	SLOPE	II C 2	WETLAND	26	26							0.00			
1	C	4	150.33	150.41	PSS1/EM1B	FLAT - ORGANIC	II C 2, III A 2	WETLAND	388	388							0.07			
1	C	4	150.41	150.48	PEM1/SS1C	SLOPE	III A 2, II C 2	WETLAND	363	363							0.07			
1	C	4	150.48	150.51	PSS1/EM1B	FLAT - ORGANIC	II C 2, III A 2	WETLAND	199	199							0.04			
1	C	4	150.51	150.54	U	N/A	II D, II C 2	UPLAND	120		120						0.02			
1	C	4	150.54	150.55	PSS1/EM1B	FLAT - ORGANIC	II C 2, III A 2	WETLAND	100	100							0.02			
1	C	5A	150.55	150.78	PSS1/EM1B	FLAT - ORGANIC	II C 2, III A 2	WETLAND	1170	1170								0.22		
1	C	4	150.78	150.81	PSS1/EM1B	FLAT - ORGANIC	II C 2, III A 2	WETLAND	189	189							0.04			
1	C	4	150.81	150.82	PSS1B	FLAT - ORGANIC	II D	WETLAND	50	50							0.01			
1	C	4	150.82	150.86	U	N/A	II D, II C 2	UPLAND	211		211						0.04			
1	C	5A	150.86	150.98	U	N/A	II D, II C 2	UPLAND	603		603							0.11		
1	C	5A	150.98	151.03	PSS1/EM1C	FLAT - ORGANIC	II D 3, III A 2	WETLAND	315	315								0.06		
1	C	5A	151.03	151.09	U	N/A	II C 2, II B 2	UPLAND	312		312							0.06		
1	C	WB-W	151.09	151.10	U	N/A	II C 2, II B 2	UPLAND	22		22									0.00
1	C	WB-W	151.10	151.11	R3UBH	RIVERINE	NONE	WETLAND	55	55										0.01
1	C	WB-W	151.11	151.12	U	N/A	II D	UPLAND	43		43									0.01
1	C	4	151.12	151.19	U	N/A	II D	UPLAND	370		370						0.07			
1	C	4	151.19	151.71	PSS1/EM1B	FLAT - ORGANIC	II C 2, III A 2	WETLAND	2770	2770							0.52			
1	C	4	151.71	151.82	PEM1/SS1E	SLOPE	III A 2, II D	WETLAND	578	578							0.11			
1	C	4	151.82	151.87	PSS1/EM1B	FLAT - ORGANIC	II C 2, III A 2	WETLAND	255	255							0.05			
1	C	4	151.87	151.89	PEM1/SS1E	SLOPE	III A 2, II D	WETLAND	84	84							0.02			
1	C	4	151.89	151.91	PSS1/EM1B	FLAT - ORGANIC	II C 2, III A 2	WETLAND	141	141							0.03			
1	C	4	151.91	151.95	PEM1/SS1E	SLOPE	III A 2, II D	WETLAND	216	216							0.04			
1	C	4	151.95	152.04	PSS1/EM1B	FLAT - ORGANIC	II C 2, III A 2	WETLAND	459	459							0.09			
1	C	4	152.04	152.09	PEM1/SS1E	SLOPE	III A 2, II D	WETLAND	255	255							0.05			
1	C	4	152.09	152.09	PSS1/EM1B	FLAT - ORGANIC	II C 2, III A 2	WETLAND	25	25							0.00			
1	C	4	152.09	152.11	PEM1/SS1E	SLOPE	III A 2, II D	WETLAND	115	115							0.02			
1	C	4	152.11	152.25	PSS1/EM1B	FLAT - ORGANIC	II C 2, III A 2	WETLAND	697	697							0.13			
1	C	4	152.25	152.25	PSS1/EM1C	SLOPE	II C 2, III A 2	WETLAND	24	24							0.00			
1	C	4	152.25	152.27	PSS1/EM1B	FLAT - ORGANIC	II C 2, III A 2	WETLAND	87	87							0.02			
1	C	4	152.27	152.27	PSS1/EM1C	SLOPE	II C 2, III A 2	WETLAND	16	16							0.00			
1	C	4	152.27	152.35	PSS1/EM1B	FLAT - ORGANIC	II C 2, III A 2	WETLAND	412	412							0.08			
1	C	4	152.35	152.39	PEM1/SS1E	SLOPE	III A 2, II C 2	WETLAND	192	192							0.04			
1	C	4	152.39	152.40	R4SBA	RIVERINE	NONE	WETLAND	56	56							0.01			
1	C	4	152.40	152.49	PEM1/SS1E	SLOPE	III A 2, II C 2	WETLAND	481	481							0.09			
1	C	4	152.49	152.58	PSS1/EM1B	FLAT - ORGANIC	II C 2, III A 2	WETLAND	507	507							0.10			
1	C	4	152.58	152.75	PSS1B	FLAT - ORGANIC	II D	WETLAND	902	902							0.17			
1	C	4	152.75	152.88	U	N/A	II C 2	UPLAND	650		650						0.12			
1	C	4	152.88	152.93	PSS1B	FLAT - ORGANIC	II D	WETLAND	270	270							0.05			
1	C	4	152.93	152.95	U	N/A	II C 2	UPLAND	104		104						0.02			
1	C	4	152.95	152.96	D	N/A	NONE	DISTURBED	39			39					0.01			
1	C	4	152.96	152.99	U	N/A	III A 1, II D	UPLAND	195		195						0.04			
1	C	4	152.99	153.23	PSS1/EM1B	FLAT - ORGANIC	II C 2, III A 2	WETLAND	1233	1233							0.23			
1	C	4	153.23	153.23	PEM1F	SLOPE	III A 2	WETLAND	25	25							0.00			
1	C	2	153.23	153.37	PEM1F	SLOPE	III A 2	WETLAND	720	720					0.14					
1	C	WB-W	153.37	153.38	PEM1F	SLOPE	III A 2	WETLAND	60	60										0.01
1	C	2	153.38	153.43	PEM1F	SLOPE	III A 2	WETLAND	271	271					0.05					
1	C	2	153.43	153.44	PSS1/EM1B	FLAT - ORGANIC	II C 2, III A 2	WETLAND	29	29					0.01					
1	C	4	153.44	153.58	PSS1/EM1B	FLAT - ORGANIC	II C 2, III A 2	WETLAND	783	783							0.15			
1	C	4	153.58	153.59	PEM1F	SLOPE	III A 2	WETLAND	27	27							0.01			
1	C	2	153.59	153.59	PEM1F	SLOPE	III A 2	WETLAND	18	18					0.00					
1	C	2	153.59	153.59	PSS1/EM1B	FLAT - ORGANIC	II C 2, III A 2	WETLAND	12	12					0.00					
1	C	4	153.59	153.80	PSS1/EM1B	FLAT - ORGANIC	II C 2, III A 2	WETLAND	1110	1110							0.21			
1	C	WB-W	153.80	153.81	PSS1/EM1B	FLAT - ORGANIC	II C 2, III A 2	WETLAND	26	26										0.00
1	C	WB-W	153.81	153.82	PEM1F	SLOPE	III A 2	WETLAND	50	50										0.01
1	C	WB-W	153.82	153.82	PSS1/EM1B	FLAT - ORGANIC	II C 2, III A 2	WETLAND	14	14										0.00
1	C	4	153.82	154.00	PSS1/EM1B	FLAT - ORGANIC	II C 2, III A 2	WETLAND	954	954							0.18			
1	C	4	154.00	154.00	PEM1F	SLOPE	III A 2	WETLAND	6	6							0.00			

SPREAD	SECTION	ROW MODE	FROM MP	TO MP	NWI CODE	HGM CLASS	VIERECK	DESCRIPTION	LINEAR FEET	WETLAND FEET	UPLAND FEET	DISTURBED FEET	Comments	Mode 1 - Ice Workpad (miles)	Mode 2 - Frost Pack (miles)	Mode 3 - Timber Mats	Mode 4 - Granular Workpad	Mode 5A - Grade	Mode 5B - Mountain Grade	Stream & Flood Plain Crossings
1	C	2	154.00	154.01	PEM1F	SLOPE	III A 2	WETLAND	45	45					0.01					
1	C	2	154.01	154.01	PSS1/EM1B	FLAT - ORGANIC	II C 2, III A 2	WETLAND	15	15					0.00					
1	C	4	154.01	154.06	PSS1/EM1B	FLAT - ORGANIC	II C 2, III A 2	WETLAND	256	256							0.05			
1	C	4	154.06	154.07	PEM1F	SLOPE	III A 2	WETLAND	14	14							0.00			
1	C	2	154.07	154.10	PEM1F	SLOPE	III A 2	WETLAND	190	190					0.04					
1	C	2	154.10	154.11	PSS1/EM1B	FLAT - ORGANIC	II C 2, III A 2	WETLAND	20	20					0.00					
1	C	4	154.11	154.12	PSS1/EM1B	FLAT - ORGANIC	II C 2, III A 2	WETLAND	58	58							0.01			
1	C	4	154.12	154.12	PEM1F	SLOPE	III A 2	WETLAND	2	2							0.00			
1	C	2	154.12	154.13	PEM1F	SLOPE	III A 2	WETLAND	60	60					0.01					
1	C	2	154.13	154.13	PSS1/EM1B	FLAT - ORGANIC	II C 2, III A 2	WETLAND	30	30					0.01					
1	C	4	154.13	154.18	PSS1/EM1B	FLAT - ORGANIC	II C 2, III A 2	WETLAND	227	227							0.04			
1	C	4	154.18	154.18	PEM1F	SLOPE	III A 2	WETLAND	13	13							0.00			
1	C	2	154.18	154.26	PEM1F	SLOPE	III A 2	WETLAND	402	402					0.08					
1	C	2	154.26	154.26	PSS1/EM1B	FLAT - ORGANIC	II C 2, III A 2	WETLAND	18	18					0.00					
1	C	4	154.26	154.30	PSS1/EM1B	FLAT - ORGANIC	II C 2, III A 2	WETLAND	242	242							0.05			
1	C	4	154.30	154.32	PEM1F	SLOPE	III A 2	WETLAND	72	72							0.01			
1	C	4	154.32	154.34	PSS1/EM1B	FLAT - ORGANIC	II C 2, III A 2	WETLAND	105	105							0.02			
1	C	WB-W	154.34	154.36	PSS1/EM1B	FLAT - ORGANIC	II C 2, III A 2	WETLAND	90	90										0.02
1	C	4	154.36	154.40	PSS1/EM1B	FLAT - ORGANIC	II C 2, III A 2	WETLAND	220	220							0.04			
1	C	4	154.40	154.40	PEM1/SS1B	SLOPE	III A 2, II C 2	WETLAND	26	26							0.01			
1	C	4	154.40	155.32	PSS1/EM1B	FLAT - ORGANIC	II C 2, III A 2	WETLAND	4846	4846							0.92			
1	C	4	155.32	155.33	U	N/A	II C 2	UPLAND	40		40						0.01			
1	C	4	155.33	155.33	R4SBC	RIVERINE	NONE	WETLAND	26	26							0.00			
1	C	4	155.33	155.34	U	N/A	II C 2	UPLAND	62		62						0.01			
1	C	4	155.34	155.35	U	N/A	NONE	UPLAND	30		30						0.01			
1	C	WB-W	155.35	155.36	U	N/A	NONE	UPLAND	68		68									0.01
1	C	WB-W	155.36	155.37	U	N/A	II C 2	UPLAND	22		22									0.00
1	C	5A	155.37	155.41	U	N/A	II C 2	UPLAND	235		235							0.04		
1	C	5A	155.41	155.43	D	N/A	NONE	DISTURBED	98			98						0.02		
1	C	5A	155.43	155.47	U	N/A	II C 2, II D	UPLAND	210		210							0.04		
1	C	5A	155.47	155.51	U	N/A	II C 2	UPLAND	222		222							0.04		
1	C	5A	155.51	155.52	PEM1/SS1C	SLOPE	III A 2, II C 2	WETLAND	37	37								0.01		
1	C	5A	155.52	155.53	U	N/A	II C 2	UPLAND	53		53							0.01		
1	C	5A	155.53	155.54	PEM1/SS1C	SLOPE	III A 2, II C 2	WETLAND	81	81								0.02		
1	C	5A	155.54	155.55	U	N/A	II C 2, II D	UPLAND	32		32							0.01		
1	C	5A	155.55	155.57	PEM1/SS1C	SLOPE	III A 2, II C 2	WETLAND	81	81								0.02		
1	C	5A	155.57	155.58	U	N/A	II C 2, II D	UPLAND	63		63							0.01		
1	C	5A	155.58	155.63	PEM1/SS1C	SLOPE	III A 2, II C 2	WETLAND	297	297								0.06		
1	C	WB-W	155.63	155.64	PEM1/SS1C	SLOPE	III A 2, II C 2	WETLAND	26	26										0.00
1	C	WB-W	155.64	155.65	U	N/A	II C 2	UPLAND	64		64									0.01
1	C	5A	155.65	155.69	U	N/A	II C 2	UPLAND	198		198							0.04		
1	C	5A	155.69	155.74	PEM1E	FLAT - ORGANIC	III A 2	WETLAND	296	296								0.06		
1	C	5A	155.74	155.84	U	N/A	II C 2	UPLAND	496		496							0.09		
1	C	WB-W	155.84	155.86	U	N/A	II C 2	UPLAND	90		90									0.02
1	C	5A	155.86	156.17	U	N/A	II C 2	UPLAND	1647		1647							0.31		
1	C	5A	156.17	156.17	D	N/A	NONE	DISTURBED	23			23						0.00		
1	C	5A	156.17	156.22	PEM1/SS1B	FLAT - ORGANIC	III A 2, II C 2	WETLAND	251	251								0.05		
1	C	5A	156.22	156.23	PSS1/EM1B	SLOPE	II C 2, III A 2	WETLAND	61	61								0.01		
1	C	5A	156.23	156.41	PEM1/SS1B	FLAT - ORGANIC	III A 2, II C 2	WETLAND	943	943								0.18		
1	C	5A	156.41	156.43	PEM1/SS1B	SLOPE	III A 2, II C 2	WETLAND	111	111								0.02		
1	C	5A	156.43	156.44	PEM1/SS1B	FLAT - ORGANIC	III A 2, II C 2	WETLAND	28	28								0.01		
1	C	5A	156.44	156.48	PEM1/SS1B	SLOPE	III A 2, II C 2	WETLAND	252	252								0.05		
1	C	5A	156.48	156.49	PEM1/SS1B	FLAT - ORGANIC	III A 2, II C 2	WETLAND	48	48								0.01		
1	C	5A	156.49	156.50	PEM1/SS1B	SLOPE	III A 2, II C 2	WETLAND	25	25								0.00		
1	C	WB-W	156.50	156.51	PEM1/SS1B	SLOPE	III A 2, II C 2	WETLAND	60	60										0.01
1	C	5A	156.51	156.51	PEM1/SS1B	SLOPE	III A 2, II C 2	WETLAND	21	21								0.00		
1	C	5A	156.51	156.62	PSS1/EM1B	FLAT - ORGANIC	II C 2, III A 2	WETLAND	561	561								0.11		
1	C	5A	156.62	156.64	PEM1E	SLOPE	III A 3	WETLAND	108	108								0.02		
1	C	5A	156.64	156.66	PSS1/EM1B	FLAT - ORGANIC	II C 2, III A 2	WETLAND	108	108								0.02		
1	C	5A	156.66	156.67	PEM1E	SLOPE	III A 3	WETLAND	29	29								0.01		
1	C	5A	156.67	156.74	PSS1/EM1B	FLAT - ORGANIC	II C 2, III A 2	WETLAND	390	390								0.07		
1	C	5A	156.74	156.74	PEM1E	SLOPE	III A 3	WETLAND	17	17								0.00		
1	C	5A	156.74	156.78	PSS1/EM1B	FLAT - ORGANIC	II C 2, III A 2	WETLAND	182	182								0.03		
1	C	5A	156.78	156.78	PEM1E	SLOPE	III A 3	WETLAND	8	8								0.00		
1	C	5A	156.78	156.79	PSS1/EM1B	FLAT - ORGANIC	II C 2, III A 2	WETLAND	52	52								0.01		
1	C	5A	156.79	156.79	PEM1E	SLOPE	III A 3	WETLAND	9	9								0.00		
1	C	5A	156.79	156.83	PSS1/EM1B	FLAT - ORGANIC	II C 2, III A 2	WETLAND	227	227								0.04		
1	C	5A	156.83	156.85	PSS1/EM1B	SLOPE	II C 2, III A 2	WETLAND	108	108								0.02		
1	C	5A	156.85	156.86	PSS1/EM1B	FLAT - ORGANIC	II C 2, III A 2	WETLAND	49	49								0.01		
1	C	5A	156.86	156.87	PSS1/EM1B	SLOPE	II C 2, III A 2	WETLAND	26	26								0.01		
1	C	5A	156.87	157.15	PSS1/EM1B	FLAT - ORGANIC	II C 2, III A 2	WETLAND	1492	1492								0.28		
1	C	5A	157.15	157.15	U	N/A	II C 2, II D	UPLAND	17		17							0.00		

SPREAD	SECTION	ROW MODE	FROM MP	TO MP	NWI CODE	HGM CLASS	VIERECK	DESCRIPTION	LINEAR FEET	WETLAND FEET	UPLAND FEET	DISTURBED FEET	Comments	Mode 1 - Ice Workpad (miles)	Mode 2 - Frost Pack (miles)	Mode 3 - Timber Mats	Mode 4 - Granular Workpad	Mode 5A - Grade	Mode 5B - Mountain Grade	Stream & Flood Plain Crossings
1	C	5A	157.15	157.26	U	N/A	II C 2, III A 1	UPLAND	549		549							0.10		
1	C	5A	157.26	157.33	U	N/A	II C 2, II D	UPLAND	391		391							0.07		
1	C	5A	157.33	157.34	U	N/A	II C 2, III A 1	UPLAND	60		60							0.01		
1	C	5A	157.34	157.37	U	N/A	II C 2, II D	UPLAND	156		156							0.03		
1	C	4	157.37	157.50	U	N/A	II C 2, II D	UPLAND	660		660						0.12			
1	C	WB-W	157.50	157.51	U	N/A	II C 2, II D	UPLAND	56		56									0.01
1	C	WB-W	157.51	157.51	R4SBC	RIVERINE	NONE	WETLAND	4	4										0.00
1	C	5A	157.51	157.51	R4SBC	RIVERINE	NONE	WETLAND	19	19								0.00		
1	C	5A	157.51	157.51	U	N/A	II C 2, II D	UPLAND	2		2							0.00		
1	C	5A	157.51	157.53	R4SBC	RIVERINE	NONE	WETLAND	99	99								0.02		
1	C	WB-W	157.53	157.54	R4SBC	RIVERINE	NONE	WETLAND	54	54										0.01
1	C	WB-W	157.54	157.55	PSS1/EM1C	RIVERINE	II C 2, III A 1	WETLAND	36	36										0.01
1	C	5A	157.55	157.57	PSS1/EM1C	RIVERINE	II C 2, III A 1	WETLAND	120	120								0.02		
1	C	WB-W	157.57	157.57	PSS1/EM1C	RIVERINE	II C 2, III A 1	WETLAND	1	1										0.00
1	C	WB-W	157.57	157.58	R4SBC	RIVERINE	NONE	WETLAND	30	30										0.01
1	C	WB-W	157.58	157.58	PSS1/EM1A	RIVERINE	II C 2, III A 1	WETLAND	29	29										0.01
1	C	5A	157.58	157.59	PSS1/EM1A	RIVERINE	II C 2, III A 1	WETLAND	60	60								0.01		
1	C	WB-W	157.59	157.62	PSS1/EM1A	RIVERINE	II C 2, III A 1	WETLAND	139	139										0.03
1	C	WB-W	157.62	157.64	U	N/A	II C 2, II D	UPLAND	119		119									0.02
1	C	WB-W	157.64	157.65	PSS1/EM1A	RIVERINE	II C 2, III A 1	WETLAND	32	32										0.01
1	C	WB-W	157.65	157.66	R3USC	RIVERINE	NONE	WETLAND	33	33										0.01
1	C	WB-W	157.66	157.67	PSS1/EM1A	RIVERINE	II C 2, III A 1	WETLAND	78	78										0.01
1	C	WB-W	157.67	157.68	PSS1/EM1B	FLAT - ORGANIC	II D 3, III A 2	WETLAND	36	36										0.01
1	C	WB-W	157.68	157.69	PSS1/EM1A	RIVERINE	II C 2, III A 1	WETLAND	62	62										0.01
1	C	WB-W	157.69	157.70	PSS1/EM1B	FLAT - ORGANIC	II D 3, III A 2	WETLAND	40	40										0.01
1	C	5A	157.70	157.85	PSS1/EM1B	FLAT - ORGANIC	II D 3, III A 2	WETLAND	808	808								0.15		
1	C	5A	157.85	157.86	PSS1/EM1B	SLOPE	II C 2, III A 2	WETLAND	53	53								0.01		
1	C	5A	157.86	158.16	PSS1/EM1B	FLAT - ORGANIC	II D 3, III A 2	WETLAND	1600	1600								0.30		
1	C	5A	158.16	158.17	PEM1F	SLOPE	III A 3	WETLAND	28	28								0.01		
1	C	WB-W	158.17	158.18	PEM1F	SLOPE	III A 3	WETLAND	77	77										0.01
1	C	WB-W	158.18	158.18	PEM1/SS1B	FLAT - ORGANIC	III A 2, II C 2	WETLAND	13	13										0.00
1	C	4	158.18	158.25	PEM1/SS1B	FLAT - ORGANIC	III A 2, II C 2	WETLAND	321	321							0.06			
1	C	4	158.25	158.25	PEM1/SS1B	SLOPE	III A 2, II C 2	WETLAND	9	9							0.00			
1	C	WB-W	158.25	158.25	PEM1/SS1B	SLOPE	III A 2, II C 2	WETLAND	5	5										0.00
1	C	WB-W	158.25	158.26	PEM1/SS1B	FLAT - ORGANIC	III A 2, II C 2	WETLAND	55	55										0.01
1	C	4	158.26	158.31	PEM1/SS1B	FLAT - ORGANIC	III A 2, II C 2	WETLAND	268	268							0.05			
1	C	4	158.31	158.31	PEM1/SS1B	SLOPE	III A 2, II C 2	WETLAND	24	24							0.00			
1	C	4	158.31	158.33	PEM1/SS1B	FLAT - ORGANIC	III A 2, II C 2	WETLAND	70	70							0.01			
1	C	4	158.33	158.33	PEM1/SS1B	SLOPE	III A 2, II C 2	WETLAND	20	20							0.00			
1	C	4	158.33	158.40	PEM1/SS1B	FLAT - ORGANIC	III A 2, II C 2	WETLAND	388	388							0.07			
1	C	4	158.40	158.43	PEM1/SS1B	SLOPE	III A 2, II C 2	WETLAND	107	107							0.02			
1	C	4	158.43	158.43	PEM1/SS1B	FLAT - ORGANIC	III A 2, II C 2	WETLAND	39	39							0.01			
1	C	4	158.43	158.44	PEM1/SS1B	SLOPE	III A 2, II C 2	WETLAND	22	22							0.00			
1	C	4	158.44	158.48	PEM1/SS1B	FLAT - ORGANIC	III A 2, II C 2	WETLAND	233	233							0.04			
1	C	4	158.48	158.51	U	N/A	II C 2, II D	UPLAND	147		147						0.03			
1	C	WB-W	158.51	158.51	U	N/A	II C 2, II D	UPLAND	14		14									0.00
1	C	WB-W	158.51	158.52	PEM1/SS1B	SLOPE	III A 2, II C 2	WETLAND	21	21										0.00
1	C	WB-W	158.52	158.52	PEM1/SS1B	FLAT - ORGANIC	III A 2, II C 2	WETLAND	26	26										0.00
1	C	5A	158.52	158.57	PEM1/SS1B	FLAT - ORGANIC	III A 2, II C 2	WETLAND	256	256								0.05		
1	C	5A	158.57	158.57	PEM1/SS1B	SLOPE	III A 2, II C 2	WETLAND	20	20								0.00		
1	C	5A	158.57	158.59	PEM1/SS1B	FLAT - ORGANIC	III A 2, II C 2	WETLAND	74	74								0.01		
1	C	5A	158.59	158.59	PEM1/SS1B	SLOPE	III A 2, II C 2	WETLAND	9	9								0.00		
1	C	WB-W	158.59	158.59	PEM1/SS1B	SLOPE	III A 2, II C 2	WETLAND	7	7										0.00
1	C	WB-W	158.59	158.61	R4SBA	RIVERINE	NONE, II C 2	WETLAND	96	96										0.02
1	C	WB-W	158.61	158.61	PSS1/EM1B	FLAT - ORGANIC	II D, III A 2	WETLAND	17	17										0.00
1	C	5A	158.61	158.79	PSS1/EM1B	FLAT - ORGANIC	II D, III A 2	WETLAND	925	925								0.18		
1	C	5A	158.79	158.79	PSS1/EM1B	SLOPE	II D, III A 2	WETLAND	20	20								0.00		
1	C	5A	158.79	158.85	PSS1/EM1B	FLAT - ORGANIC	II D, III A 2	WETLAND	308	308								0.06		
1	C	5A	158.85	158.86	PSS1/EM1B	SLOPE	II D, III A 2	WETLAND	77	77								0.01		
1	C	5A	158.86	158.88	PSS1/EM1B	FLAT - ORGANIC	II D, III A 2	WETLAND	109	109								0.02		
1	C	5A	158.88	158.92	PSS1/EM1B	SLOPE	II D, III A 2	WETLAND	212	212								0.04		
1	C	5A	158.92	158.95	PSS1/EM1B	FLAT - ORGANIC	II D, III A 2	WETLAND	165	165								0.03		
1	C	5A	158.95	158.96	PSS1/EM1B	SLOPE	II D, III A 2	WETLAND	22	22								0.00		
1	C	5A	158.96	158.98	PSS1/EM1B	FLAT - ORGANIC	II D, III A 2	WETLAND	131	131								0.02		
1	C	5A	158.98	158.99	PSS1/EM1B	SLOPE	II D, III A 2	WETLAND	24	24								0.00		
1	C	5A	158.99	159.01	PSS1/EM1B	FLAT - ORGANIC	II D, III A 2	WETLAND	136	136								0.03		
1	C	4	159.01	159.21	PSS1/EM1B	FLAT - ORGANIC	II D, III A 2	WETLAND	1009	1009							0.19			
1	C	4	159.21	159.21	PEM1F	SLOPE	III A 3	WETLAND	22	22							0.00			
1	C	4	159.21	159.23	R4SBA	RIVERINE	II C 2	WETLAND	114	114							0.02			
1	C	4	159.23	159.28	PSS1/EM1B	FLAT - ORGANIC	II C 2, III A 2	WETLAND	265	265							0.05			
1	C	4	159.28	159.29	PSS1/EM1B	SLOPE	II C 2, III A 2	WETLAND	44	44							0.01			
1	C	4	159.29	159.44	PSS1/EM1B	FLAT - ORGANIC	II C 2, III A 2	WETLAND	783	783							0.15			

SPREAD	SECTION	ROW MODE	FROM MP	TO MP	NWI CODE	HGM CLASS	VIERECK	DESCRIPTION	LINEAR FEET	WETLAND FEET	UPLAND FEET	DISTURBED FEET	Comments	Mode 1 - Ice Workpad (miles)	Mode 2 - Frost Pack (miles)	Mode 3 - Timber Mats	Mode 4 - Granular Workpad	Mode 5A - Grade	Mode 5B - Mountain Grade	Stream & Flood Plain Crossings
1	C	4	159.44	159.44	PSS1/EM1B	SLOPE	II C 2, III A 2	WETLAND	30	30							0.01			
1	C	4	159.44	159.50	PSS1/EM1B	FLAT - ORGANIC	II C 2, III A 2	WETLAND	321	321							0.06			
1	C	4	159.50	159.51	PSS1/EM1B	SLOPE	II C 2, III A 2	WETLAND	43	43							0.01			
1	C	4	159.51	159.54	PSS1/EM1B	FLAT - ORGANIC	II C 2, III A 2	WETLAND	150	150							0.03			
1	C	4	159.54	159.54	PSS1/EM1B	SLOPE	II C 2, III A 2	WETLAND	17	17							0.00			
1	C	4	159.54	159.56	PSS1/EM1B	FLAT - ORGANIC	II C 2, III A 2	WETLAND	103	103							0.02			
1	C	4	159.56	159.57	PSS1/EM1B	SLOPE	II C 2, III A 2	WETLAND	38	38							0.01			
1	C	4	159.57	159.60	PSS1/EM1B	FLAT - ORGANIC	II C 2, III A 2	WETLAND	161	161							0.03			
1	C	4	159.60	159.81	PSS1/EM1B	SLOPE	II C 2, III A 2	WETLAND	1101	1101							0.21			
1	C	5A	159.81	159.85	PSS1/EM1B	SLOPE	II C 2, III A 2	WETLAND	206	206								0.04		
1	C	5A	159.85	159.86	PSS1/EM1B	FLAT - ORGANIC	II C 2, III A 2	WETLAND	57	57								0.01		
1	C	5A	159.86	159.86	U	N/A	II C 2	UPLAND	8		8							0.00		
1	C	5A	159.86	159.89	PSS1/EM1B	FLAT - ORGANIC	II C 2, III A 2	WETLAND	140	140								0.03		
1	C	5A	159.89	160.19	U	N/A	II C 2	UPLAND	1571		1571							0.30		
1	C	5A	160.19	160.21	PSS1/EM1B	FLAT - ORGANIC	II C 2, III A 2	WETLAND	153	153								0.03		
1	C	5A	160.21	160.30	PSS1/EM1B	SLOPE	II C 2, III A 2	WETLAND	448	448								0.08		
1	C	5A	160.30	160.49	U	N/A	II C 2	UPLAND	998		998							0.19		
1	C	5A	160.49	160.51	U	N/A	II C 2, III A 2	UPLAND	92		92							0.02		
1	C	5A	160.51	160.51	U	N/A	II D	UPLAND	47		47							0.01		
1	C	5A	160.51	160.58	PSS1/EM1C	SLOPE	II C 2, III A 1	WETLAND	344	344								0.07		
1	C	5A	160.58	160.59	R4SBA	RIVERINE	II C 2	WETLAND	78	78								0.01		
1	C	5A	160.59	160.60	U	N/A	II C 2, III A 1	UPLAND	28		28							0.01		
1	C	WB-W	160.60	160.61	U	N/A	II C 2, III A 1	UPLAND	32		32									0.01
1	C	WB-W	160.61	160.62	R4SBA	RIVERINE	II C 2	WETLAND	58	58										0.01
1	C	5A	160.62	160.62	R4SBA	RIVERINE	II C 2	WETLAND	2	2								0.00		
1	C	5A	160.62	160.64	PSS1/EM1C	SLOPE	II C 2, III A 1	WETLAND	125	125								0.02		
1	C	5A	160.64	160.76	PEM1/SS1B	FLAT - ORGANIC	III A 2, II C 2	WETLAND	623	623								0.12		
1	C	WB-W	160.76	160.76	PEM1/SS1B	FLAT - ORGANIC	III A 2, II C 2	WETLAND	18	18										0.00
1	C	WB-W	160.76	160.78	R4SBA	RIVERINE	NONE	WETLAND	81	81										0.02
1	C	WB-W	160.78	160.79	PEM1/SS1B	FLAT - ORGANIC	III A 2, II C 2	WETLAND	81	81										0.02
1	C	4	160.79	160.82	PEM1/SS1B	FLAT - ORGANIC	III A 2, II C 2	WETLAND	134	134							0.03			
1	C	4	160.82	160.82	R4SBA	RIVERINE	NONE	WETLAND	16	16							0.00			
1	C	WB-W	160.82	160.82	R4SBA	RIVERINE	NONE	WETLAND	17	17										0.00
1	C	WB-W	160.82	160.83	PEM1/SS1B	FLAT - ORGANIC	III A 2, II C 2	WETLAND	43	43										0.01
1	C	4	160.83	160.89	PEM1/SS1B	FLAT - ORGANIC	III A 2, II C 2	WETLAND	302	302							0.06			
1	C	4	160.89	160.93	U	N/A	II C 2	UPLAND	224		224						0.04			
1	C	4	160.93	161.02	PEM1/SS1B	FLAT - ORGANIC	III A 2, II C 2	WETLAND	467	467							0.09			
1	C	4	161.02	161.04	U	N/A	II C 2	UPLAND	94		94						0.02			
1	C	4	161.04	161.10	PEM1/SS1B	FLAT - ORGANIC	III A 2, II C 2	WETLAND	344	344							0.07			
1	C	4	161.10	161.11	U	N/A	II C 2	UPLAND	52		52						0.01			
1	C	4	161.11	161.12	PEM1/SS1B	FLAT - ORGANIC	III A 2, II C 2	WETLAND	32	32							0.01			
1	C	4	161.12	161.15	U	N/A	II C 2	UPLAND	136		136						0.03			
1	C	4	161.15	161.46	PEM1/SS1B	FLAT - ORGANIC	III A 2, II C 2	WETLAND	1670	1670							0.32			
1	C	4	161.46	161.48	PEM1/SS1B	SLOPE	III A 2, II C 2	WETLAND	94	94							0.02			
1	C	4	161.48	161.50	PEM1/SS1B	FLAT - ORGANIC	III A 2, II C 2	WETLAND	97	97							0.02			
1	C	4	161.50	161.52	PEM1/SS1B	SLOPE	III A 2, II C 2	WETLAND	96	96							0.02			
1	C	4	161.52	161.53	PEM1/SS1B	FLAT - ORGANIC	III A 2, II C 2	WETLAND	52	52							0.01			
1	C	4	161.53	161.53	PEM1/SS1B	SLOPE	III A 2, II C 2	WETLAND	25	25							0.00			
1	C	4	161.53	161.55	PEM1/SS1B	FLAT - ORGANIC	III A 2, II C 2	WETLAND	92	92							0.02			
1	C	4	161.55	161.56	PEM1/SS1B	SLOPE	III A 2, II C 2	WETLAND	51	51							0.01			
1	C	4	161.56	161.56	PEM1/SS1B	FLAT - ORGANIC	III A 2, II C 2	WETLAND	40	40							0.01			
1	C	4	161.56	161.60	PEM1/SS1B	SLOPE	III A 2, II C 2	WETLAND	186	186							0.04			
1	C	4	161.60	161.63	PEM1/SS1B	FLAT - ORGANIC	III A 2, II C 2	WETLAND	136	136							0.03			
1	C	4	161.63	161.63	PEM1/SS1B	SLOPE	III A 2, II C 2	WETLAND	41	41							0.01			
1	C	4	161.63	161.90	PEM1/SS1B	FLAT - ORGANIC	III A 2, II C 2	WETLAND	1398	1398							0.26			
1	C	4	161.90	162.01	PEM1/SS1B	SLOPE	III A 2, II C 2	WETLAND	581	581							0.11			
1	C	WB-W	162.01	162.01	PEM1/SS1B	SLOPE	III A 2, II C 2	WETLAND	22	22										0.00
1	C	WB-W	162.01	162.01	R4SBC	RIVERINE	II C 2	WETLAND	11	11										0.00
1	C	WB-W	162.01	162.03	PEM1/SS1B	SLOPE	III A 2, II C 2	WETLAND	57	57										0.01
1	C	5A	162.03	162.14	PEM1/SS1B	SLOPE	III A 2, II C 2	WETLAND	590	590								0.11		
1	C	5A	162.14	162.14	R4SBC	RIVERINE	II C 2	WETLAND	10	10								0.00		
1	C	2	162.14	162.15	R4SBC	RIVERINE	II C 2	WETLAND	53	53					0.01					
1	C	2	162.15	162.15	PSS1B	SLOPE	II C 2, II D	WETLAND	7	7					0.00					
1	C	5A	162.15	162.27	PSS1B	SLOPE	II C 2, II D	WETLAND	611	611								0.12		
1	C	5A	162.27	162.32	PSS1A	RIVERINE	II C 2	WETLAND	259	259								0.05		
1	C	WB-W	162.32	162.32	PSS1A	RIVERINE	II C 2	WETLAND	15	15										0.00
1	C	WB-W	162.32	162.36	R4SB	RIVERINE	NONE	WETLAND	209	209										0.04
1	C	WB-W	162.36	162.38	D	N/A	NONE	DISTURBED	100			100								0.02
1	C	WB-W	162.38	162.38	U	N/A	II C 2, II D	UPLAND	36		36									0.01
1	C	5A	162.38	162.48	U	N/A	II C 2, II D	UPLAND	510		510							0.10		
1	C	WB-W	162.48	162.53	U	N/A	II C 2, II D	UPLAND	270		270									0.05
1	C	5A	162.53	162.69	U	N/A	II C 2, II D	UPLAND	865		865							0.16		

SPREAD	SECTION	ROW MODE	FROM MP	TO MP	NWI CODE	HGM CLASS	VIERECK	DESCRIPTION	LINEAR FEET	WETLAND FEET	UPLAND FEET	DISTURBED FEET	Comments	Mode 1 - Ice Workpad (miles)	Mode 2 - Frost Pack (miles)	Mode 3 - Timber Mats	Mode 4 - Granular Workpad	Mode 5A - Grade	Mode 5B - Mountain Grade	Stream & Flood Plain Crossings
1	C	5A	162.69	162.76	D	N/A	NONE	DISTURBED	347			347						0.07		
1	C	5A	162.76	162.82	U	N/A	II C 2, II D	UPLAND	297		297							0.06		
1	C	5A	162.82	162.95	D	N/A	NONE	DISTURBED	681			681						0.13		
1	C	WB-W	162.95	162.96	D	N/A	NONE	DISTURBED	69			69								0.01
1	C	WB-W	162.96	162.97	U	N/A	II C 2, II D	UPLAND	62		62									0.01
1	C	WB-W	162.97	163.05	U	N/A	NONE	UPLAND	395		395									0.07
1	C	WB-W	163.05	163.05	U	N/A	II C 2, II D	UPLAND	44		44									0.01
1	C	4	163.05	163.06	U	N/A	II C 2, II D	UPLAND	46		46						0.01			
1	C	4	163.06	163.13	PSS1/EM1B	SLOPE	II C 2, III A 2	WETLAND	350	350							0.07			
1	C	4	163.13	163.20	PEM1/SS1B	FLAT - ORGANIC	III A 2, II C 2	WETLAND	375	375							0.07			
1	C	4	163.20	163.30	U	N/A	II C 2, II D	UPLAND	528		528						0.10			
1	C	4	163.30	163.35	PEM1/SS1B	FLAT - ORGANIC	III A 2, II C 2	WETLAND	267	267							0.05			
1	C	4	163.35	163.38	PSS1/EM1B	SLOPE	II C 2, III A 2	WETLAND	174	174							0.03			
1	C	WB-W	163.38	163.39	PSS1/EM1B	SLOPE	II C 2, III A 2	WETLAND	60	60										0.01
1	C	4	163.39	163.48	PSS1/EM1B	SLOPE	II C 2, III A 2	WETLAND	433	433							0.08			
1	C	4	163.48	163.51	U	N/A	II C 2, II D	UPLAND	152		152						0.03			
1	C	4	163.51	163.53	PSS1/EM1B	SLOPE	II C 2, III A 2	WETLAND	145	145							0.03			
1	C	4	163.53	163.58	U	N/A	II C 2, II D	UPLAND	254		254						0.05			
1	C	4	163.58	163.64	PSS1/EM1B	SLOPE	II C 2, III A 2	WETLAND	289	289							0.05			
1	C	4	163.64	163.66	U	N/A	II C 2, II D	UPLAND	137		137						0.03			
1	C	4	163.66	163.68	PSS1/EM1B	SLOPE	II C 2, III A 2	WETLAND	73	73							0.01			
1	C	4	163.68	163.72	U	N/A	II C 2, II D	UPLAND	257		257						0.05			
1	C	4	163.72	163.74	U	N/A	II C 2, II D	UPLAND	60		60						0.01			
1	C	4	163.74	163.79	U	N/A	II C 2, II D	UPLAND	300		300						0.06			
1	C	WB-W	163.79	163.80	U	N/A	II C 2, II D	UPLAND	28		28									0.01
1	C	WB-W	163.80	163.80	PSS1/EM1B	SLOPE	II C 2, III A 2	WETLAND	32	32										0.01
1	C	4	163.80	163.94	PSS1/EM1B	SLOPE	II C 2, III A 2	WETLAND	711	711							0.13			
1	C	4	163.94	164.00	U	N/A	II C 2, II D	UPLAND	339		339						0.06			
1	C	4	164.00	164.01	U	N/A	II C 2, II D	UPLAND	30		30						0.01			
1	C	4	164.01	164.10	U	N/A	II C 2, II D	UPLAND	480		480						0.09			
1	C	WB-W	164.10	164.12	U	N/A	II C 2, II D	UPLAND	90		90									0.02
1	C	4	164.12	164.14	U	N/A	II C 2, II D	UPLAND	150		150						0.03			
1	C	4	164.14	164.15	U	N/A	II C 2, II D	UPLAND	30		30						0.01			
1	C	4	164.15	164.18	U	N/A	II C 2, II D	UPLAND	180		180						0.03			
1	C	4	164.18	164.23	U	N/A	II C 2, II D	UPLAND	252		252						0.05			
1	C	4	164.23	164.24	R4SBC	RIVERINE	NONE	WETLAND	32	32							0.01			
1	C	4	164.24	164.24	U	N/A	II C 2, III B 1	UPLAND	16		16						0.00			
1	C	WB-W	164.24	164.25	U	N/A	II C 2, III B 1	UPLAND	60		60									0.01
1	C	4	164.25	164.28	U	N/A	II C 2, III B 1	UPLAND	150		150						0.03			
1	C	4	164.28	164.32	U	N/A	II C 2, III B 1	UPLAND	180		180						0.03			
1	C	4	164.32	164.35	U	N/A	II C 2, III B 1	UPLAND	158		158						0.03			
1	C	4	164.35	164.45	PSS1/EM1B	FLAT - ORGANIC	II D, III A 2	WETLAND	558	558							0.11			
1	C	4	164.45	164.46	PSS1/EM1C	SLOPE	II C 2, III A 2	WETLAND	49	49							0.01			
1	C	4	164.46	164.48	PSS1/EM1B	FLAT - ORGANIC	II D, III A 2	WETLAND	120	120							0.02			
1	C	4	164.48	164.53	PSS1/EM1C	SLOPE	II C 2, III A 2	WETLAND	261	261							0.05			
1	C	4	164.53	164.63	PSS1/EM1B	FLAT - ORGANIC	II D, III A 2	WETLAND	532	532							0.10			
1	C	4	164.63	164.65	PSS1/EM1C	SLOPE	II C 2, III A 2	WETLAND	91	91							0.02			
1	C	5A	164.65	164.67	PSS1/EM1C	SLOPE	II C 2, III A 2	WETLAND	102	102								0.02		
1	C	5A	164.67	164.71	PSS1/EM1B	FLAT - ORGANIC	II D, III A 2	WETLAND	235	235								0.04		
1	C	5A	164.71	164.72	PSS1/EM1C	SLOPE	II C 2, III A 2	WETLAND	52	52								0.01		
1	C	5A	164.72	164.74	PSS1/EM1B	FLAT - ORGANIC	II D, III A 2	WETLAND	82	82								0.02		
1	C	5A	164.74	164.76	PSS1/EM1C	SLOPE	II C 2, III A 2	WETLAND	126	126								0.02		
1	C	5A	164.76	164.82	PSS1/EM1B	FLAT - ORGANIC	II D, III A 2	WETLAND	304	304								0.06		
1	C	5A	164.82	164.84	PSS1/EM1C	SLOPE	II C 2, III A 2	WETLAND	82	82								0.02		
1	C	5A	164.84	164.96	PSS1/EM1B	FLAT - ORGANIC	II D, III A 2	WETLAND	668	668								0.13		
1	C	WB-W	164.96	164.97	PSS1/EM1B	FLAT - ORGANIC	II D, III A 2	WETLAND	60	60										0.01
1	C	5A	164.97	165.21	PSS1/EM1B	FLAT - ORGANIC	II D, III A 2	WETLAND	1271	1271								0.24		
1	C	5A	165.21	165.24	PSS1C	SLOPE	II C 2	WETLAND	109	109								0.02		
1	C	WB-W	165.24	165.25	PSS1C	SLOPE	II C 2	WETLAND	90	90										0.02
1	C	5A	165.25	165.36	PSS1C	SLOPE	II C 2	WETLAND	570	570								0.11		
1	C	WB-W	165.36	165.36	PSS1C	SLOPE	II C 2	WETLAND	6	6										0.00
1	C	WB-W	165.36	165.40	R4SB	RIVERINE	NONE	WETLAND	186	186										0.04
1	C	WB-W	165.40	165.42	PSS1C	SLOPE	II C 2	WETLAND	138	138										0.03
1	C	5A	165.42	165.48	PSS1C	SLOPE	II C 2	WETLAND	287	287								0.05		
1	C	5A	165.48	165.56	R4SBC	RIVERINE	NONE	WETLAND	433	433								0.08		
1	C	WB-W	165.56	165.58	R4SBC	RIVERINE	NONE	WETLAND	90	90										0.02
1	C	5A	165.58	165.58	R4SBC	RIVERINE	NONE	WETLAND	4	4								0.00		
1	C	5A	165.58	165.61	PSS1C	SLOPE	II C 2	WETLAND	176	176								0.03		
1	C	WB-W	165.61	165.66	PSS1C	SLOPE	II C 2	WETLAND	240	240										0.05
1	C	5A	165.66	165.83	PSS1C	SLOPE	II C 2	WETLAND	919	919								0.17		
1	C	5A	165.83	165.97	U	N/A	II C 2, III B 1	UPLAND	717		717							0.14		
1	C	5A	165.97	166.00	PSS1C	SLOPE	II C 2	WETLAND	184	184								0.03		

SPREAD	SECTION	ROW MODE	FROM MP	TO MP	NWI CODE	HGM CLASS	VIERECK	DESCRIPTION	LINEAR FEET	WETLAND FEET	UPLAND FEET	DISTURBED FEET	Comments	Mode 1 - Ice Workpad (miles)	Mode 2 - Frost Pack (miles)	Mode 3 - Timber Mats	Mode 4 - Granular Workpad	Mode 5A - Grade	Mode 5B - Mountain Grade	Stream & Flood Plain Crossings
1	C	5A	166.00	166.05	U	N/A	II C 2, III B 1	UPLAND	257		257							0.05		
1	C	5A	166.05	166.19	PSS1C	SLOPE	II C 2	WETLAND	743	743								0.14		
1	C	5A	166.19	166.24	R3USC	RIVERINE	NONE	WETLAND	247	247								0.05		
1	D	5A	166.24	166.30	R3USC	RIVERINE	NONE	WETLAND	310	310								0.06		
1	D	5A	166.30	166.57	PSS1C	RIVERINE	II C 2	WETLAND	1432	1432								0.27		
1	D	5A	166.57	166.61	R3USC	RIVERINE	NONE	WETLAND	212	212								0.04		
1	D	5A	166.61	166.62	PSS1C	RIVERINE	II C 2	WETLAND	53	53								0.01		
1	D	5A	166.62	166.77	R3USC	RIVERINE	NONE	WETLAND	812	812								0.15		
1	D	5A	166.77	166.81	U	N/A	II C 2	UPLAND	215		215							0.04		
1	D	5A	166.81	167.33	R3USC	RIVERINE	NONE	WETLAND	2729	2729								0.52		
1	D	5A	167.33	167.35	U	N/A	II D	UPLAND	109		109							0.02		
1	D	5A	167.35	167.44	R3USC	RIVERINE	NONE	WETLAND	464	464								0.09		
1	D	5A	167.44	167.47	U	N/A	II D	UPLAND	193		193							0.04		
1	D	5A	167.47	167.65	R3USC	RIVERINE	NONE	WETLAND	932	932								0.18		
1	D	5A	167.65	167.71	PSS1C	RIVERINE	II C 2	WETLAND	302	302								0.06		
1	D	5A	167.71	167.76	R3USC	RIVERINE	NONE	WETLAND	277	277								0.05		
1	D	5A	167.76	167.80	U	N/A	II D	UPLAND	228		228							0.04		
1	D	5A	167.80	167.88	R3USC	RIVERINE	NONE	WETLAND	402	402								0.08		
1	D	5A	167.88	167.89	U	N/A	II D	UPLAND	62		62							0.01		
1	D	5A	167.89	168.63	R3USC	RIVERINE	NONE	WETLAND	3911	3911								0.74		
1	D	5A	168.63	168.79	D	N/A	NONE	DISTURBED	830			830						0.16		
1	E	5A	168.79	169.00	U	N/A	III A 1, II D	UPLAND	1094		1094							0.21		
1	E	5A	169.00	169.02	D	N/A	NONE	DISTURBED	127			127						0.02		
1	E	5A	169.02	169.03	U	N/A	III A 1, II D	UPLAND	30		30							0.01		
1	E	5A	169.03	169.06	D	N/A	NONE	DISTURBED	206			206						0.04		
1	E	5A	169.06	169.12	U	N/A	III A 1, II D	UPLAND	313		313							0.06		
1	E	5A	169.12	169.13	D	N/A	NONE	DISTURBED	15			15						0.00		
1	E	5A	169.13	169.31	U	N/A	III A 1, II D	UPLAND	966		966							0.18		
1	E	5A	169.31	169.32	PEM1/SS1B	SLOPE	III A 2, II D	WETLAND	62	62								0.01		
1	E	5A	169.32	169.34	U	N/A	III A 1, II D	UPLAND	113		113							0.02		
1	E	WB-S	169.34	169.34	U	N/A	III A 1, II D	UPLAND	4		4									0.00
1	E	WB-S	169.34	169.35	PEM1/SS1B	SLOPE	III A 2, II D	WETLAND	18	18										0.00
1	E	WB-S	169.35	169.35	U	N/A	III A 1, II D	UPLAND	39		39									0.01
1	E	5A	169.35	169.38	U	N/A	III A 1, II D	UPLAND	139		139							0.03		
1	E	5A	169.38	169.40	D	N/A	NONE	DISTURBED	87			87						0.02		
1	E	5A	169.40	169.50	U	N/A	III A 1, II D	UPLAND	533		533							0.10		
1	E	5A	169.50	169.51	D	N/A	NONE	DISTURBED	86			86						0.02		
1	E	5A	169.51	169.52	U	N/A	II D	UPLAND	35		35							0.01		
1	E	5A	169.52	169.54	PEM1B	SLOPE	III A 2	WETLAND	79	79								0.01		
1	E	5A	169.54	169.57	PEM1E	SLOPE	III A 3	WETLAND	192	192								0.04		
1	E	5A	169.57	169.91	D	N/A	NONE	DISTURBED	1786			1786						0.34		
1	E	5A	169.91	169.95	D	N/A	NONE	DISTURBED	220			220						0.04		
1	E	5A	169.95	170.04	U	N/A	II D	UPLAND	480		480							0.09		
1	E	5A	170.04	170.06	PEM1B	DEPRESSIONAL	III A 2	WETLAND	79	79								0.02		
1	E	5A	170.06	170.22	U	N/A	II D	UPLAND	869		869							0.16		
1	E	5A	170.22	170.28	R4SB	RIVERINE	NONE	WETLAND	276	276								0.05		
1	F	5A	170.28	170.53	U	N/A	II D	UPLAND	1323		1323							0.25		
1	F	5A	170.53	170.56	U	N/A	II D, II C 2	UPLAND	197		197							0.04		
1	F	5A	170.56	170.66	U	N/A	II D	UPLAND	495		495							0.09		
1	F	5A	170.66	170.69	U	N/A	II D, II C 2	UPLAND	178		178							0.03		
1	F	5A	170.69	170.78	U	N/A	II D	UPLAND	461		461							0.09		
1	F	5A	170.78	170.82	U	N/A	II D, II C 2	UPLAND	237		237							0.04		
1	F	5A	170.82	170.82	R4SB	RIVERINE	NONE	WETLAND	7	7								0.00		
1	F	5A	170.82	170.84	U	N/A	II D, II C 2	UPLAND	106		106							0.02		
1	F	5A	170.84	170.88	PSS1/EM1B	SLOPE	II D, III A 2	WETLAND	169	169								0.03		
1	F	5A	170.88	170.89	U	N/A	II D, II C 2	UPLAND	89		89							0.02		
1	F	5A	170.89	171.03	U	N/A	II D	UPLAND	703		703							0.13		
1	F	5A	171.03	171.04	U	N/A	II D, II C 2	UPLAND	53		53							0.01		
1	F	5A	171.04	171.04	U	N/A	II D	UPLAND	17		17							0.00		
1	F	5A	171.04	171.05	R4SB	RIVERINE	NONE	WETLAND	44	44								0.01		
1	F	WB-S	171.05	171.05	R4SB	RIVERINE	NONE	WETLAND	2	2										0.00
1	F	WB-S	171.05	171.07	U	N/A	II D, II C 2	UPLAND	108		108									0.02
1	F	WB-S	171.07	171.07	R4SB	RIVERINE	NONE	WETLAND	11	11										0.00
1	F	5A	171.07	171.08	R4SB	RIVERINE	NONE	WETLAND	64	64								0.01		
1	F	5A	171.08	171.11	U	N/A	II D	UPLAND	124		124							0.02		
1	F	5A	171.11	171.22	U	N/A	II D, II C 2	UPLAND	582		582							0.11		
1	F	5A	171.22	171.22	U	N/A	II D	UPLAND	46		46							0.01		
1	F	5A	171.22	171.37	U	N/A	II D, II C 2	UPLAND	743		743							0.14		
1	F	5A	171.37	171.37	PSS1B	SLOPE	II D, II C 2	WETLAND	11	11								0.00		
1	F	5A	171.37	171.37	U	N/A	II D, II C 2	UPLAND	11		11							0.00		
1	F	5A	171.37	171.37	PSS1B	SLOPE	II D, II C 2	WETLAND	17	17								0.00		
1	F	5A	171.37	171.39	U	N/A	II D, II C 2	UPLAND	65		65							0.01		

SPREAD	SECTION	ROW MODE	FROM MP	TO MP	NWI CODE	HGM CLASS	VIERECK	DESCRIPTION	LINEAR FEET	WETLAND FEET	UPLAND FEET	DISTURBED FEET	Comments	Mode 1 - Ice Workpad (miles)	Mode 2 - Frost Pack (miles)	Mode 3 - Timber Mats	Mode 4 - Granular Workpad	Mode 5A - Grade	Mode 5B - Mountain Grade	Stream & Flood Plain Crossings
1	F	5A	171.39	171.39	U	N/A	II D	UPLAND	37		37							0.01		
1	F	5A	171.39	171.41	U	N/A	II D, II C 2	UPLAND	99		99							0.02		
1	F	5A	171.41	171.45	U	N/A	II D	UPLAND	191		191							0.04		
1	F	5A	171.45	171.45	U	N/A	II D, II C 2	UPLAND	23		23							0.00		
1	F	5A	171.45	171.46	U	N/A	II D	UPLAND	46		46							0.01		
1	F	5A	171.46	171.49	U	N/A	II D, II C 2	UPLAND	172		172							0.03		
1	F	5A	171.49	171.59	U	N/A	II D	UPLAND	502		502							0.10		
1	F	5A	171.59	171.60	PSS1/EM1B	SLOPE	II D, III A 2	WETLAND	56	56								0.01		
1	F	4	171.60	171.75	PSS1/EM1B	SLOPE	II D, III A 2	WETLAND	793	793							0.15			
1	F	4	171.75	171.76	PSS1/EM1C	SLOPE	II C 2, III A 2	WETLAND	40	40							0.01			
1	F	4	171.76	171.77	PSS1/EM1B	SLOPE	II D, III A 2	WETLAND	83	83							0.02			
1	F	4	171.77	171.79	PSS1/EM1C	SLOPE	II C 2, III A 2	WETLAND	72	72							0.01			
1	F	4	171.79	171.81	D	N/A	NONE	DISTURBED	151			151					0.03			
1	F	WB-S	171.81	171.82	D	N/A	NONE	DISTURBED	10			10								0.00
1	F	WB-S	171.82	171.82	PSS1/EM1C	RIVERINE	II C 2, III A 2	WETLAND	14	14										0.00
1	F	WB-S	171.82	171.82	R3UB/USH	RIVERINE	NONE	WETLAND	8	8										0.00
1	F	WB-S	171.82	171.83	PSS1C	RIVERINE	II C 2	WETLAND	53	53										0.01
1	F	WB-S	171.83	171.84	R3UB/USH	RIVERINE	NONE	WETLAND	64	64										0.01
1	F	WB-S	171.84	171.85	PSS1C	RIVERINE	II C 2	WETLAND	60	60										0.01
1	F	WB-S	171.85	171.91	R3UB/USH	RIVERINE	NONE	WETLAND	319	319										0.06
1	F	WB-S	171.91	171.96	D	N/A	NONE	DISTURBED	265			265								0.05
1	F	WB-S	171.96	171.97	PSS1/EM1B	FLAT - ORGANIC	II C 2, III A 2	WETLAND	47	47										0.01
1	F	4	171.97	172.18	PSS1/EM1B	FLAT - ORGANIC	II C 2, III A 2	WETLAND	1078	1078							0.20			
1	F	4	172.18	172.19	PSS1C	SLOPE	II C 2	WETLAND	57	57							0.01			
1	F	4	172.19	172.52	PSS1/EM1B	FLAT - ORGANIC	II C 2, III A 2	WETLAND	1731	1731							0.33			
1	F	4	172.52	172.53	PSS1/EM1B	SLOPE	II C 2, III A 2	WETLAND	58	58							0.01			
1	F	4	172.53	172.58	PSS1/EM1B	FLAT - ORGANIC	II C 2, III A 2	WETLAND	262	262							0.05			
1	F	4	172.58	172.58	U	N/A	II D, II C 2	UPLAND	29		29						0.01			
1	F	4	172.58	172.65	PSS1/EM1B	FLAT - ORGANIC	II C 2, III A 2	WETLAND	378	378							0.07			
1	F	4	172.65	172.66	PSS1C	RIVERINE	II C 2	WETLAND	31	31							0.01			
1	F	4	172.66	172.67	PSS1/EM1B	FLAT - ORGANIC	II C 2, III A 2	WETLAND	73	73							0.01			
1	F	4	172.67	172.68	PSS1C	RIVERINE	II C 2	WETLAND	52	52							0.01			
1	F	4	172.68	172.75	PSS1/EM1B	FLAT - ORGANIC	II C 2, III A 2	WETLAND	345	345							0.07			
1	F	4	172.75	172.75	PSS1C	RIVERINE	II C 2	WETLAND	14	14							0.00			
1	F	4	172.75	172.76	PSS1B	FLAT - ORGANIC	II C 2	WETLAND	32	32							0.01			
1	F	4	172.76	172.76	PSS1C	RIVERINE	II C 2	WETLAND	17	17							0.00			
1	F	4	172.76	172.77	PSS1/EM1B	FLAT - ORGANIC	II C 2, III A 2	WETLAND	34	34							0.01			
1	F	4	172.77	173.42	U	N/A	II C 2, III A 2	UPLAND	3429		3429						0.65			
1	F	4	173.42	173.46	PSS1/EM1B	FLAT - ORGANIC	II C 2, III A 2	WETLAND	225	225							0.04			
1	F	4	173.46	173.47	U	N/A	II C 2, III A 2	UPLAND	31		31						0.01			
1	F	4	173.47	173.48	R4SBC	RIVERINE	II C 2	WETLAND	73	73							0.01			
1	F	WB-S	173.48	173.49	R4SBC	RIVERINE	II C 2	WETLAND	50	50										0.01
1	F	WB-S	173.49	173.49	U	N/A	II D, II C 2	UPLAND	10		10									0.00
1	F	4	173.49	173.83	U	N/A	II D, II C 2	UPLAND	1776		1776						0.34			
1	F	4	173.83	173.83	R4SBC	RIVERINE	NONE	WETLAND	24	24							0.00			
1	F	WB-S	173.83	173.85	R4SBC	RIVERINE	NONE	WETLAND	90	90										0.02
1	F	4	173.85	173.85	R4SBC	RIVERINE	NONE	WETLAND	3	3							0.00			
1	F	4	173.85	173.88	PSS1C	RIVERINE	II B 2	WETLAND	175	175							0.03			
1	F	4	173.88	173.89	D	N/A	NONE	DISTURBED	58			58					0.01			
1	F	4	173.89	173.96	PSS1/EM1B	FLAT - ORGANIC	II C 2, III A 2	WETLAND	330	330							0.06			
1	F	4	173.96	174.00	PSS1/EM1C	SLOPE	II C 2, III A 2	WETLAND	209	209							0.04			
1	F	4	174.00	174.05	PSS1/EM1B	FLAT - ORGANIC	II C 2, III A 2	WETLAND	312	312							0.06			
1	F	4	174.05	174.08	PSS1/EM1C	SLOPE	II C 2, III A 2	WETLAND	122	122							0.02			
1	F	4	174.08	174.10	PSS1/EM1B	FLAT - ORGANIC	II C 2, III A 2	WETLAND	125	125							0.02			
1	F	4	174.10	174.15	PSS1/EM1C	SLOPE	II C 2, III A 2	WETLAND	268	268							0.05			
1	F	4	174.15	174.23	PEM1/SS1B	FLAT - ORGANIC	III A 2, II C 2	WETLAND	430	430							0.08			
1	F	4	174.23	174.24	PSS1/EM1C	RIVERINE	II C 2, III A 2	WETLAND	38	38							0.01			
1	F	WB-S	174.24	174.24	PSS1/EM1C	RIVERINE	II C 2, III A 2	WETLAND	17	17										0.00
1	F	WB-S	174.24	174.25	PSS1/EM1C	SLOPE	II C 2, III A 2	WETLAND	43	43										0.01
1	F	4	174.25	174.25	PSS1/EM1C	SLOPE	II C 2, III A 2	WETLAND	6	6							0.00			
1	F	4	174.25	174.30	PSS1/EM1B	FLAT - ORGANIC	II C 2, III A 2	WETLAND	250	250							0.05			
1	F	4	174.30	174.34	PSS1/EM1C	SLOPE	II C 2, III A 2	WETLAND	212	212							0.04			
1	F	4	174.34	174.36	PSS1/EM1B	FLAT - ORGANIC	II C 2, III A 2	WETLAND	83	83							0.02			
1	F	4	174.36	174.36	PSS1/EM1C	RIVERINE	II C 2, III A 2	WETLAND	20	20							0.00			
1	F	WB-S	174.36	174.37	PSS1/EM1C	RIVERINE	II C 2, III A 2	WETLAND	60	60										0.01
1	F	4	174.37	174.37	PSS1/EM1C	RIVERINE	II C 2, III A 2	WETLAND	10	10							0.00			
1	F	4	174.37	174.48	PEM1/SS1B	FLAT - ORGANIC	III A 2, II C 2	WETLAND	577	577							0.11			
1	F	4	174.48	174.50	PSS1/EM1C	SLOPE	II C 2, III A 2	WETLAND	95	95							0.02			
1	F	4	174.50	174.55	PEM1/SS1B	FLAT - ORGANIC	III A 2, II C 2	WETLAND	249	249							0.05			
1	F	4	174.55	174.56	PSS1/EM1C	SLOPE	II C 2, III A 2	WETLAND	59	59							0.01			
1	F	4	174.56	174.57	PSS1/EM1C	RIVERINE	II C 2, III A 2	WETLAND	65	65							0.01			
1	F	4	174.57	174.61	PSS1/ML1B	FLAT - ORGANIC	II C 2	WETLAND	187	187							0.04			

SPREAD	SECTION	ROW MODE	FROM MP	TO MP	NWI CODE	HGM CLASS	VIERECK	DESCRIPTION	LINEAR FEET	WETLAND FEET	UPLAND FEET	DISTURBED FEET	Comments	Mode 1 - Ice Workpad (miles)	Mode 2 - Frost Pack (miles)	Mode 3 - Timber Mats	Mode 4 - Granular Workpad	Mode 5A - Grade	Mode 5B - Mountain Grade	Stream & Flood Plain Crossings
1	F	4	174.61	174.61	PSS1/EM1C	SLOPE	II C 2, III A 2	WETLAND	41	41							0.01			
1	F	4	174.61	174.63	PSS1/ML1B	FLAT - ORGANIC	II C 2	WETLAND	108	108							0.02			
1	F	4	174.63	174.64	PSS1/EM1C	SLOPE	II C 2, III A 2	WETLAND	30	30							0.01			
1	F	4	174.64	174.68	PSS1/ML1B	FLAT - ORGANIC	II C 2	WETLAND	189	189							0.04			
1	F	4	174.68	174.69	PSS1/EM1C	RIVERINE	II C 2, III A 1	WETLAND	82	82							0.02			
1	F	4	174.69	174.75	PSS1B	FLAT - ORGANIC	II C 2	WETLAND	316	316							0.06			
1	F	4	174.75	174.86	PSS1B	SLOPE	II C 2	WETLAND	567	567							0.11			
1	F	4	174.86	174.90	U	N/A	II D, II C 2	UPLAND	218		218						0.04			
1	F	4	174.90	174.91	PSS1B	SLOPE	II C 2	WETLAND	46	46							0.01			
1	F	4	174.91	174.92	U	N/A	II D, II C 2	UPLAND	85		85						0.02			
1	F	4	174.92	174.95	PSS1B	SLOPE	II C 2	WETLAND	122	122							0.02			
1	F	4	174.95	174.98	U	N/A	II D, II C 2	UPLAND	146		146						0.03			
1	F	4	174.98	174.99	U	N/A	II C 2, II B 2	UPLAND	56		56						0.01			
1	F	4	174.99	174.99	PSS1B	SLOPE	II C 2	WETLAND	37	37							0.01			
1	F	4	174.99	175.08	U	N/A	II C 2, II B 2	UPLAND	484		484						0.09			
1	F	4	175.08	175.13	U	N/A	II D, II C 2	UPLAND	219		219						0.04			
1	F	4	175.13	175.25	D	N/A	NONE	DISTURBED	630			630					0.12			
1	F	4	175.25	175.25	U	N/A	II D, II C 2	UPLAND	15		15						0.00			
1	F	4	175.25	175.26	U	N/A	NONE	UPLAND	49		49						0.01			
1	F	5A	175.26	175.27	U	N/A	NONE	UPLAND	90		90							0.02		
1	F	WB-S	175.27	175.29	U	N/A	NONE	UPLAND	60		60									0.01
1	F	5A	175.29	175.30	U	N/A	NONE	UPLAND	60		60							0.01		
1	F	4	175.30	175.30	U	N/A	NONE	UPLAND	27		27						0.01			
1	F	4	175.30	175.33	U	N/A	II D, II C 2	UPLAND	132		132						0.02			
1	F	4	175.33	175.33	PSS1/EM1C	SLOPE	II C 2, III A 2	WETLAND	33	33							0.01			
1	F	4	175.33	175.51	U	N/A	II D, II C 2	UPLAND	920		920						0.17			
1	F	4	175.51	175.62	PSS1/EM1C	SLOPE	II C 2, III A 2	WETLAND	585	585							0.11			
1	F	4	175.62	175.67	U	N/A	II D, II C 2	UPLAND	280		280						0.05			
1	F	4	175.67	175.75	PSS1/EM1C	RIVERINE	II C 2, III A 1	WETLAND	423	423							0.08			
1	F	WB-S	175.75	175.76	PSS1/EM1C	RIVERINE	II C 2, III A 1	WETLAND	60	60										0.01
1	F	5A	175.76	175.79	PSS1/EM1C	RIVERINE	II C 2, III A 1	WETLAND	120	120								0.02		
1	F	WB-S	175.79	175.80	PSS1/EM1C	RIVERINE	II C 2, III A 1	WETLAND	60	60										0.01
1	F	5A	175.80	175.85	PSS1/EM1C	RIVERINE	II C 2, III A 1	WETLAND	300	300								0.06		
1	F	WB-S	175.85	175.87	PSS1/EM1C	RIVERINE	II C 2, III A 1	WETLAND	90	90										0.02
1	F	5A	175.87	175.92	PSS1/EM1C	RIVERINE	II C 2, III A 1	WETLAND	240	240								0.05		
1	F	WB-S	175.92	175.92	PSS1/EM1C	RIVERINE	II C 2, III A 1	WETLAND	44	44										0.01
1	F	WB-S	175.92	175.93	PSS1/EM1C	SLOPE	II C 2, III A 2	WETLAND	16	16										0.00
1	F	4	175.93	175.97	PSS1/EM1C	SLOPE	II C 2, III A 2	WETLAND	218	218							0.04			
1	F	4	175.97	176.16	U	N/A	II D, II C 2	UPLAND	985		985						0.19			
1	F	4	176.16	176.16	PSS1/EM1B	FLAT - ORGANIC	II C 2, III A 2	WETLAND	11	11							0.00			
1	F	4	176.16	176.17	PSS1/EM1C	SLOPE	II C 2, III A 1	WETLAND	70	70							0.01			
1	F	4	176.17	176.18	PSS1/EM1B	FLAT - ORGANIC	II C 2, III A 2	WETLAND	46	46							0.01			
1	F	4	176.18	176.18	PSS1/EM1C	SLOPE	II C 2, III A 1	WETLAND	25	25							0.00			
1	F	4	176.18	176.19	PSS1/EM1B	FLAT - ORGANIC	II C 2, III A 2	WETLAND	26	26							0.00			
1	F	4	176.19	176.19	PSS1/EM1C	SLOPE	II C 2, III A 1	WETLAND	20	20							0.00			
1	F	4	176.19	176.21	PSS1/EM1B	FLAT - ORGANIC	II C 2, III A 2	WETLAND	109	109							0.02			
1	F	4	176.21	176.22	PSS1/EM1C	SLOPE	II C 2, III A 1	WETLAND	54	54							0.01			
1	F	4	176.22	176.27	U	N/A	II D, II C 2	UPLAND	248		248						0.05			
1	F	4	176.27	176.28	PSS1/EM1C	SLOPE	II C 2, III A 1	WETLAND	62	62							0.01			
1	F	4	176.28	176.30	U	N/A	II D, II C 2	UPLAND	75		75						0.01			
1	F	4	176.30	176.36	PSS1/EM1B	FLAT - ORGANIC	II C 2, III A 2	WETLAND	321	321							0.06			
1	F	4	176.36	176.38	U	N/A	II D, II C 2	UPLAND	131		131						0.02			
1	F	4	176.38	176.40	PSS1/EM1B	FLAT - ORGANIC	II C 2, III A 2	WETLAND	103	103							0.02			
1	F	4	176.40	176.44	U	N/A	II D, II C 2	UPLAND	194		194						0.04			
1	F	4	176.44	176.46	U	N/A	II D, II B 2	UPLAND	105		105						0.02			
1	F	4	176.46	176.48	PSS1/EM1B	FLAT - ORGANIC	II C 2, III A 2	WETLAND	93	93							0.02			
1	F	4	176.48	176.63	U	N/A	II D, II B 2	UPLAND	795		795						0.15			
1	F	4	176.63	176.63	PSS1C	SLOPE	II C 2	WETLAND	22	22							0.00			
1	F	4	176.63	176.67	PSS1/EM1B	FLAT - ORGANIC	II C 2, III A 2	WETLAND	193	193							0.04			
1	F	4	176.67	176.68	PSS1C	SLOPE	II C 2	WETLAND	46	46							0.01			
1	F	4	176.68	176.70	PSS1/EM1B	FLAT - ORGANIC	II C 2, III A 2	WETLAND	122	122							0.02			
1	F	4	176.70	176.71	PSS1C	SLOPE	II C 2	WETLAND	45	45							0.01			
1	F	4	176.71	176.74	PSS1/EM1B	FLAT - ORGANIC	II C 2, III A 2	WETLAND	150	150							0.03			
1	F	4	176.74	176.75	PSS1C	SLOPE	II C 2	WETLAND	51	51							0.01			
1	F	4	176.75	177.04	PSS1/EM1B	FLAT - ORGANIC	II C 2, III A 2	WETLAND	1569	1569							0.30			
1	F	4	177.04	177.05	PSS1C	SLOPE	II C 2	WETLAND	30	30							0.01			
1	F	4	177.05	177.08	PSS1/EM1B	FLAT - ORGANIC	II C 2, III A 2	WETLAND	180	180							0.03			
1	F	4	177.08	177.09	PSS1C	SLOPE	II C 2	WETLAND	21	21							0.00			
1	F	4	177.09	177.11	PSS1/EM1B	FLAT - ORGANIC	II C 2, III A 2	WETLAND	146	146							0.03			
1	F	4	177.11	177.12	PSS1/EM1B	SLOPE	II C 2, III A 2	WETLAND	26	26							0.01			
1	F	4	177.12	177.13	PSS1/EM1B	FLAT - ORGANIC	II C 2, III A 2	WETLAND	43	43							0.01			
1	F	4	177.13	177.13	PSS1/EM1B	SLOPE	II C 2, III A 2	WETLAND	24	24							0.00			

SPREAD	SECTION	ROW MODE	FROM MP	TO MP	NWI CODE	HGM CLASS	VIERECK	DESCRIPTION	LINEAR FEET	WETLAND FEET	UPLAND FEET	DISTURBED FEET	Comments	Mode 1 - Ice Workpad (miles)	Mode 2 - Frost Pack (miles)	Mode 3 - Timber Mats	Mode 4 - Granular Workpad	Mode 5A - Grade	Mode 5B - Mountain Grade	Stream & Flood Plain Crossings
1	F	4	177.13	177.17	PSS1/EM1B	FLAT - ORGANIC	II C 2, III A 2	WETLAND	201	201							0.04			
1	F	4	177.17	177.22	U	N/A	II D	UPLAND	267		267						0.05			
1	F	4	177.22	177.33	PSS1/EM1B	FLAT - ORGANIC	II C 2, III A 2	WETLAND	582	582							0.11			
1	F	4	177.33	177.33	PSS1/EM1B	FLAT - ORGANIC	II C 2, III A 2	WETLAND	10	10							0.00			
1	F	5A	177.33	177.33	PSS1/EM1B	FLAT - ORGANIC	II C 2, III A 2	WETLAND	9	9								0.00		
1	F	5A	177.33	177.67	U	N/A	II C 2	UPLAND	1784		1784							0.34		
1	F	5A	177.67	177.77	PSS1B	FLAT - ORGANIC	II C 2, II D	WETLAND	507	507								0.10		
1	G	5A	177.77	177.88	PSS1C	FLAT - ORGANIC	II C 2	WETLAND	590	590								0.11		
1	G	5A	177.88	177.92	PSS1C	SLOPE	II C 2	WETLAND	185	185								0.03		
1	G	5A	177.92	178.04	PSS1A	RIVERINE	II B 2	WETLAND	655	655								0.12		
1	G	5A	178.04	178.07	PSS1C	RIVERINE	II B 2	WETLAND	185	185								0.04		
1	G	5A	178.07	178.10	U	N/A	II B 2	UPLAND	156		156							0.03		
1	G	5A	178.10	178.13	PSS1C	RIVERINE	II B 2	WETLAND	137	137								0.03		
1	G	5A	178.13	178.25	U	N/A	II B 2	UPLAND	651		651							0.12		
1	G	5A	178.25	178.37	PSS1A	RIVERINE	II B 2	WETLAND	601	601								0.11		
1	G	5A	178.37	178.40	R3USC	RIVERINE	NONE	WETLAND	158	158								0.03		
1	G	5A	178.40	178.41	PSS1C	RIVERINE	II B 2	WETLAND	71	71								0.01		
1	G	5A	178.41	178.51	R3USC	RIVERINE	NONE	WETLAND	539	539								0.10		
1	G	5A	178.51	178.53	PSS1C	RIVERINE	II B 2	WETLAND	79	79								0.01		
1	G	5A	178.53	178.61	R3USC	RIVERINE	NONE	WETLAND	416	416								0.08		
1	G	5A	178.61	178.68	U	N/A	II C 2, II B 2	UPLAND	394		394							0.07		
1	G	5A	178.68	178.72	R3USC	RIVERINE	NONE	WETLAND	196	196								0.04		
1	G	5A	178.72	178.74	PSS1C	RIVERINE	II B 2	WETLAND	135	135								0.03		
1	G	5A	178.74	178.84	R3USC	RIVERINE	NONE	WETLAND	524	524								0.10		
1	G	5A	178.84	178.87	PSS1C	RIVERINE	II B 2	WETLAND	122	122								0.02		
1	G	5A	178.87	178.88	R3USC	RIVERINE	NONE	WETLAND	76	76								0.01		
1	G	5A	178.88	178.92	PSS1C	RIVERINE	II B 2	WETLAND	226	226								0.04		
1	G	5A	178.92	179.03	R3USC	RIVERINE	NONE	WETLAND	562	562								0.11		
1	G	5A	179.03	179.06	PSS1C	RIVERINE	II B 2	WETLAND	156	156								0.03		
1	G	5A	179.06	179.09	R3USC	RIVERINE	NONE	WETLAND	191	191								0.04		
1	G	5A	179.09	179.15	PSS1C	RIVERINE	II B 2	WETLAND	308	308								0.06		
1	G	5A	179.15	179.17	R3USC	RIVERINE	NONE	WETLAND	109	109								0.02		
1	G	5A	179.17	179.19	PSS1C	RIVERINE	II B 2	WETLAND	64	64								0.01		
1	G	5A	179.19	179.22	R3USC	RIVERINE	NONE	WETLAND	176	176								0.03		
1	G	5A	179.22	179.25	PSS1C	RIVERINE	II B 2	WETLAND	135	135								0.03		
1	G	5A	179.25	179.44	R3USC	RIVERINE	NONE	WETLAND	1016	1016								0.19		
1	G	5A	179.44	179.47	PSS1/EM1B	FLAT - ORGANIC	II C 2, III A 2	WETLAND	164	164								0.03		
1	G	5A	179.47	179.47	PSS1C	RIVERINE	II C 2	WETLAND	18	18								0.00		
1	G	5A	179.47	179.55	R3USC	RIVERINE	NONE	WETLAND	391	391								0.07		
1	G	5A	179.55	179.63	U	N/A	I A 3, II B 2	UPLAND	434		434							0.08		
1	G	5A	179.63	179.64	R3USC	RIVERINE	NONE	WETLAND	71	71								0.01		
1	G	5A	179.64	179.66	PSS1C	RIVERINE	II C 2	WETLAND	79	79								0.02		
1	G	5A	179.66	179.67	R3USC	RIVERINE	NONE	WETLAND	54	54								0.01		
1	G	5A	179.67	179.74	PSS1C	RIVERINE	II C 2	WETLAND	370	370								0.07		
1	G	5A	179.74	179.75	R3USC	RIVERINE	NONE	WETLAND	85	85								0.02		
1	G	5A	179.75	179.77	PSS1/FO1B	SLOPE	II B 2, I C 2	WETLAND	70	70								0.01		
1	G	5A	179.77	179.78	R3USC	RIVERINE	NONE	WETLAND	81	81								0.02		
1	G	5A	179.78	179.81	U	N/A	I C 2, II B 2	UPLAND	172		172							0.03		
1	G	5A	179.81	179.83	PSS1/FO1B	SLOPE	II B 2, I C 2	WETLAND	84	84								0.02		
1	G	5A	179.83	179.87	PSS1/EM1B	SLOPE	II C 2, III A 2	WETLAND	205	205								0.04		
1	G	5A	179.87	179.92	PSS1/FO4C	RIVERINE	I C 3, II B 2	WETLAND	289	289								0.05		
1	G	5A	179.92	179.97	U	N/A	I A 3, II C 2	UPLAND	248		248							0.05		
1	G	5A	179.97	179.98	PSS1/FO4C	RIVERINE	I C 3, II B 2	WETLAND	58	58								0.01		
1	G	5A	179.98	180.06	U	N/A	I A 3, II C 2	UPLAND	400		400							0.08		
1	G	5A	180.06	180.07	PSS1/FO4C	RIVERINE	I C 3, II B 2	WETLAND	40	40								0.01		
1	G	5A	180.07	180.18	U	N/A	I A 2, II B 2	UPLAND	614		614							0.12		
1	G	5A	180.18	180.23	PFO4/SS1B	SLOPE	I A 2, II B 2	WETLAND	239	239								0.05		
1	G	5A	180.23	180.29	U	N/A	I A 2, II B 2	UPLAND	318		318							0.06		
1	G	5A	180.29	180.38	PFO4/SS1B	SLOPE	I A 2, II B 2	WETLAND	508	508								0.10		
1	G	5A	180.38	180.40	U	N/A	I A 2, II B 2	UPLAND	93		93							0.02		
1	G	5A	180.40	180.44	PFO4/SS1B	SLOPE	I A 2, II B 2	WETLAND	192	192								0.04		
1	G	5A	180.44	180.44	U	N/A	I A 2, II B 2	UPLAND	25		25							0.00		
1	G	5A	180.44	180.45	PFO4/SS1B	SLOPE	I A 2, II B 2	WETLAND	55	55								0.01		
1	G	5A	180.45	180.51	PFO1/4C	RIVERINE	I C 1	WETLAND	317	317								0.06		
1	G	5A	180.51	180.52	U	N/A	II C 2	UPLAND	23		23							0.00		
1	G	5A	180.52	180.52	U	N/A	I A 2, II C 2	UPLAND	41		41							0.01		
1	G	5A	180.52	180.53	PFO1/4C	RIVERINE	I C 1	WETLAND	35	35								0.01		
1	G	5A	180.53	180.55	U	N/A	I A 2, II C 2	UPLAND	79		79							0.02		
1	G	5A	180.55	180.56	U	N/A	I A 3, II C 2	UPLAND	69		69							0.01		
1	G	5A	180.56	180.59	U	N/A	I A 2, II C 2	UPLAND	184		184							0.03		
1	G	5A	180.59	180.66	U	N/A	I C 2, II B 2	UPLAND	323		323							0.06		
1	G	5A	180.66	180.66	R3USC	RIVERINE	NONE	WETLAND	32	32								0.01		

SPREAD	SECTION	ROW MODE	FROM MP	TO MP	NWI CODE	HGM CLASS	VIERECK	DESCRIPTION	LINEAR FEET	WETLAND FEET	UPLAND FEET	DISTURBED FEET	Comments	Mode 1 - Ice Workpad (miles)	Mode 2 - Frost Pack (miles)	Mode 3 - Timber Mats	Mode 4 - Granular Workpad	Mode 5A - Grade	Mode 5B - Mountain Grade	Stream & Flood Plain Crossings
1	G	5A	180.66	180.67	PSS1C	RIVERINE	II B 2, II C 2	WETLAND	55	55								0.01		
1	G	5A	180.67	180.75	R3USC	RIVERINE	NONE	WETLAND	386	386								0.07		
1	G	5A	180.75	180.87	PSS1C	RIVERINE	II C 2, II B 2	WETLAND	634	634								0.12		
1	G	5A	180.87	180.87	PSS1C	RIVERINE	II C 2, II B 2	WETLAND	33	33								0.01		
1	G	5A	180.87	180.87	PSS1C	RIVERINE	II C 2, II B 2	WETLAND	1	1								0.00		
1	G	5A	180.87	180.87	PSS1C	RIVERINE	II C 2, II B 2	WETLAND	2	2								0.00		
1	G	5A	180.87	181.04	R3USC	RIVERINE	NONE	WETLAND	907	907								0.17		
1	G	5A	181.04	181.10	PSS1C	RIVERINE	II C 2, II B 2	WETLAND	278	278								0.05		
1	G	5A	181.10	181.10	R3USC	RIVERINE	NONE	WETLAND	13	13								0.00		
1	G	5A	181.10	181.12	PSS1C	RIVERINE	II C 2, II B 2	WETLAND	129	129								0.02		
1	G	5A	181.12	181.73	R3USC	RIVERINE	NONE	WETLAND	3207	3207								0.61		
1	G	5A	181.73	181.77	PSS1C	RIVERINE	II B 2, II C 2	WETLAND	196	196								0.04		
1	G	5A	181.77	181.78	R3USC	RIVERINE	NONE	WETLAND	57	57								0.01		
1	G	5A	181.78	181.88	U	N/A	I C 2, II B 2	UPLAND	529		529							0.10		
1	G	5A	181.88	181.89	R3USC	RIVERINE	NONE	WETLAND	41	41								0.01		
1	G	5A	181.89	181.94	U	N/A	I C 2, II B 2	UPLAND	291		291							0.06		
1	G	5A	181.94	181.95	D	N/A	NONE	DISTURBED	40			40						0.01		
1	G	5A	181.95	181.95	U	N/A	II B 2	UPLAND	22		22							0.00		
1	G	5A	181.95	182.01	U	N/A	I A 2, II C 2	UPLAND	313		313							0.06		
1	G	5A	182.01	182.03	U	N/A	I C 2, II B 2	UPLAND	80		80							0.02		
1	G	5A	182.03	182.04	D	N/A	NONE	DISTURBED	54			54						0.01		
1	G	5A	182.04	182.12	U	N/A	I A 2, II C 2	UPLAND	423		423							0.08		
1	H	5A	182.12	182.18	PSS1/EM1B	FLAT - ORGANIC	II C 2, III A 2	WETLAND	333	333								0.06		
1	H	5A	182.18	182.25	U	N/A	I A 3, II C 2	UPLAND	377		377							0.07		
1	H	5A	182.25	182.37	PSS1/EM1B	FLAT - ORGANIC	II C 2, III A 2	WETLAND	635	635								0.12		
1	H	5A	182.37	182.38	PSS1B	SLOPE	II C 2, II B 2	WETLAND	26	26								0.00		
1	H	5A	182.38	182.40	PSS1B	FLAT - ORGANIC	II C 2, III A 2	WETLAND	110	110								0.02		
1	H	5A	182.40	182.40	PSS1/EM1C	SLOPE	II C 2, III A 2	WETLAND	26	26								0.01		
1	H	5A	182.40	182.44	PSS1/EM1B	FLAT - ORGANIC	II C 2, III A 2	WETLAND	172	172								0.03		
1	H	5A	182.44	182.45	PSS1B	SLOPE	II C 2, II B 2	WETLAND	95	95								0.02		
1	H	5A	182.45	182.51	PSS1/EM1B	FLAT - ORGANIC	II C 2, III A 2	WETLAND	281	281								0.05		
1	H	5A	182.51	182.53	PSS1B	SLOPE	II C 2, II B 2	WETLAND	106	106								0.02		
1	H	5A	182.53	182.65	PSS1/EM1C	SLOPE	II C 2, III A 2	WETLAND	626	626								0.12		
1	H	5A	182.65	182.67	PSS1/EM1F	SLOPE	II C 2, III A 3	WETLAND	125	125								0.02		
1	H	5A	182.67	182.68	U	N/A	II C 2	UPLAND	70		70							0.01		
1	H	5A	182.68	182.69	U	N/A	I A 3, II B 2	UPLAND	60		60							0.01		
1	H	4	182.69	182.96	U	N/A	I A 3, II B 2	UPLAND	1401		1401						0.27			
1	H	4	182.96	182.97	U	N/A	II B 2	UPLAND	44		44						0.01			
1	H	4	182.97	182.97	PSS1C	RIVERINE	II B 2	WETLAND	18	18							0.00			
1	H	4	182.97	182.97	R4SBC	RIVERINE	NONE	WETLAND	8	8							0.00			
1	H	WB-S	182.97	182.98	R4SBC	RIVERINE	NONE	WETLAND	13	13										0.00
1	H	WB-S	182.98	182.98	PSS1C	RIVERINE	II B 2	WETLAND	47	47										0.01
1	H	4	182.98	182.99	PSS1C	RIVERINE	II B 2	WETLAND	16	16							0.00			
1	H	4	182.99	182.99	R4SBC	RIVERINE	NONE	WETLAND	22	22							0.00			
1	H	4	182.99	183.01	U	N/A	II B 2, III A 2	UPLAND	87		87						0.02			
1	H	4	183.01	183.03	U	N/A	I A 3, II B 2	UPLAND	117		117						0.02			
1	H	4	183.03	183.08	PSS1/4B	FLAT - ORGANIC	II C 2, II A 3	WETLAND	254	254							0.05			
1	H	4	183.08	183.20	PSS1B	FLAT - ORGANIC	II C 2, II B 2	WETLAND	637	637							0.12			
1	H	4	183.20	183.21	PSS1/EM1B	SLOPE	II C 2, III A 2	WETLAND	69	69							0.01			
1	H	4	183.21	183.22	PSS1B	FLAT - ORGANIC	II C 2, II B 2	WETLAND	37	37							0.01			
1	H	4	183.22	183.24	PSS1/EM1B	SLOPE	II C 2, III A 2	WETLAND	92	92							0.02			
1	H	4	183.24	183.34	PSS1/EM1B	FLAT - ORGANIC	II C 2, III A 2	WETLAND	546	546							0.10			
1	H	4	183.34	183.39	PEM1/SS1C	SLOPE	III A 3, II C 2	WETLAND	249	249							0.05			
1	H	4	183.39	183.39	PSS1/EM1B	SLOPE	II C 2, III A 2	WETLAND	33	33							0.01			
1	H	4	183.39	183.41	PSS1B	SLOPE	II B 2	WETLAND	98	98							0.02			
1	H	4	183.41	183.44	PEM1/SS1C	SLOPE	III A 3, II C 2	WETLAND	129	129							0.02			
1	H	4	183.44	183.44	PSS1B	SLOPE	II B 2	WETLAND	41	41							0.01			
1	H	4	183.44	183.45	PEM1/SS1C	SLOPE	III A 3, II C 2	WETLAND	56	56							0.01			
1	H	4	183.45	183.50	PSS1/EM1B	FLAT - ORGANIC	II C 2, III A 2	WETLAND	255	255							0.05			
1	H	4	183.50	183.53	U	N/A	II B 2	UPLAND	140		140						0.03			
1	H	4	183.53	183.53	PSS1B	SLOPE	II C 2, II B 2	WETLAND	28	28							0.01			
1	H	4	183.53	183.54	U	N/A	II C 2, II B 2	UPLAND	23		23						0.00			
1	H	4	183.54	183.55	PSS1B	SLOPE	II C 2, II B 2	WETLAND	62	62							0.01			
1	H	4	183.55	183.56	U	N/A	II C 2, II B 2	UPLAND	42		42						0.01			
1	H	4	183.56	183.57	PSS1B	SLOPE	II C 2, II B 2	WETLAND	46	46							0.01			
1	H	4	183.57	183.57	U	N/A	II B 2	UPLAND	28		28						0.01			
1	H	4	183.57	183.58	PSS1B	SLOPE	II C 2, II B 2	WETLAND	56	56							0.01			
1	H	4	183.58	183.60	U	N/A	II B 2	UPLAND	78		78						0.01			
1	H	4	183.60	183.63	PSS1/EM1B	FLAT - ORGANIC	II C 2, III A 2	WETLAND	180	180							0.03			
1	H	WB-S	183.63	183.63	PSS1/EM1B	FLAT - ORGANIC	II C 2, III A 2	WETLAND	3	3										0.00
1	H	WB-S	183.63	183.65	U	N/A	II B 2	UPLAND	76		76									0.01
1	H	WB-S	183.65	183.65	PSS1/EM1B	FLAT - ORGANIC	II C 2, III A 2	WETLAND	12	12										0.00

SPREAD	SECTION	ROW MODE	FROM MP	TO MP	NWI CODE	HGM CLASS	VIERECK	DESCRIPTION	LINEAR FEET	WETLAND FEET	UPLAND FEET	DISTURBED FEET	Comments	Mode 1 - Ice Workpad (miles)	Mode 2 - Frost Pack (miles)	Mode 3 - Timber Mats	Mode 4 - Granular Workpad	Mode 5A - Grade	Mode 5B - Mountain Grade	Stream & Flood Plain Crossings
1	H	4	183.65	183.84	PSS1/EM1B	FLAT - ORGANIC	II C 2, III A 2	WETLAND	990	990							0.19			
1	H	WB-S	183.84	183.84	PSS1/EM1B	FLAT - ORGANIC	II C 2, III A 2	WETLAND	39	39										0.01
1	H	WB-S	183.84	183.85	U	N/A	II B 2	UPLAND	36		36									0.01
1	H	WB-S	183.85	183.85	PSS1/EM1B	FLAT - ORGANIC	II C 2, III A 2	WETLAND	15	15										0.00
1	H	4	183.85	184.21	PSS1/EM1B	FLAT - ORGANIC	II C 2, III A 2	WETLAND	1886	1886							0.36			
1	H	4	184.21	184.22	PSS1B	SLOPE	II C 2	WETLAND	66	66							0.01			
1	H	4	184.22	184.24	PSS1/EM1B	FLAT - ORGANIC	II C 2, III A 2	WETLAND	100	100							0.02			
1	H	4	184.24	184.25	PSS1B	SLOPE	II C 2	WETLAND	27	27							0.01			
1	H	4	184.25	184.42	PSS1/EM1B	FLAT - ORGANIC	II C 2, III A 2	WETLAND	911	911							0.17			
1	H	4	184.42	184.48	PSS1/4B	SLOPE	II A 3, II C 2	WETLAND	332	332							0.06			
1	H	4	184.48	184.49	PSS4/1B	FLAT - ORGANIC	I A 2, II C 2	WETLAND	52	52							0.01			
1	H	4	184.49	184.51	R4SBC	RIVERINE	NONE	WETLAND	70	70							0.01			
1	H	4	184.51	184.52	U	N/A	II B 2	UPLAND	64		64						0.01			
1	H	4	184.52	184.52	R4SBC	RIVERINE	NONE	WETLAND	3	3							0.00			
1	H	4	184.52	184.52	R3USC	RIVERINE	NONE	WETLAND	0	0							0.00			
1	H	WB-S	184.52	184.53	R3USC	RIVERINE	NONE	WETLAND	83	83										0.02
1	H	WB-S	184.53	184.54	R3UBH	RIVERINE	NONE	WETLAND	19	19										0.00
1	H	WB-S	184.54	184.54	R3USC	RIVERINE	NONE	WETLAND	34	34										0.01
1	H	WB-S	184.54	184.55	U	N/A	I A 2	UPLAND	14		14									0.00
1	H	5A	184.55	184.75	U	N/A	I A 2	UPLAND	1050		1050							0.20		
1	H	4	184.75	184.75	U	N/A	I A 2	UPLAND	8		8						0.00			
1	H	4	184.75	184.79	PSS4/1B	FLAT - ORGANIC	I A 2, II C 2	WETLAND	248	248							0.05			
1	H	4	184.79	184.90	PSS1/EM1B	FLAT - ORGANIC	II C 2, III A 2	WETLAND	560	560							0.11			
1	H	4	184.90	184.93	PSS4/1B	FLAT - ORGANIC	II A 2, II B 2	WETLAND	178	178							0.03			
1	H	4	184.93	184.94	U	N/A	I A 3, II B 2	UPLAND	31		31						0.01			
1	H	4	184.94	185.01	PSS4/1B	FLAT - ORGANIC	II A 2, II B 2	WETLAND	373	373							0.07			
1	H	4	185.01	185.06	U	N/A	I A 2	UPLAND	253		253						0.05			
1	H	WB-S	185.06	185.07	U	N/A	I A 2	UPLAND	60		60									0.01
1	H	4	185.07	185.08	U	N/A	I A 2	UPLAND	46		46						0.01			
1	H	4	185.08	185.10	U	N/A	I A 3, II C 2	UPLAND	105		105						0.02			
1	H	4	185.10	185.13	PSS1B	FLAT - MINERAL	II C 2	WETLAND	144	144							0.03			
1	H	4	185.13	185.17	U	N/A	I A 3, II C 2	UPLAND	214		214						0.04			
1	H	4	185.17	185.25	PSS4/1B	FLAT - MINERAL	I A 3, II C 2	WETLAND	454	454							0.09			
1	H	4	185.25	185.30	U	N/A	I A 3, II C 2	UPLAND	275		275						0.05			
1	H	4	185.30	185.40	PSS4/1B	FLAT - MINERAL	I A 3, II C 2	WETLAND	489	489							0.09			
1	H	4	185.40	185.42	U	N/A	I A 3, II C 2	UPLAND	103		103						0.02			
1	H	4	185.42	185.43	PSS1C	SLOPE	II B 2	WETLAND	48	48							0.01			
1	H	4	185.43	185.43	U	N/A	I A 3, II C 2	UPLAND	16		16						0.00			
1	H	4	185.43	185.45	PSS1B	FLAT - MINERAL	II C 2	WETLAND	126	126							0.02			
1	H	4	185.45	185.46	U	N/A	I A 3, II C 2	UPLAND	18		18						0.00			
1	H	WB-S	185.46	185.47	U	N/A	I A 3, II C 2	UPLAND	60		60									0.01
1	H	4	185.47	185.48	U	N/A	I A 3, II C 2	UPLAND	47		47						0.01			
1	H	4	185.48	185.74	PSS4/1B	FLAT - MINERAL	I A 3, II C 2	WETLAND	1395	1395							0.26			
1	H	4	185.74	185.75	U	N/A	I A 3, II B 2	UPLAND	61		61						0.01			
1	H	4	185.75	185.79	PSS1/FO4B	FLAT - MINERAL	I A 3, II C 2	WETLAND	198	198							0.04			
1	H	4	185.79	185.79	U	N/A	II B 2	UPLAND	3		3						0.00			
1	H	4	185.79	185.79	PSS1C	RIVERINE	II B 2	WETLAND	26	26							0.01			
1	H	4	185.79	185.79	PSS1C	RIVERINE	II B 2	WETLAND	1	1							0.00			
1	H	4	185.79	185.87	PSS1/FO4B	SLOPE	I A 3, II B 2	WETLAND	378	378							0.07			
1	H	4	185.87	185.88	U	N/A	II B 2	UPLAND	52		52						0.01			
1	H	4	185.88	186.03	PSS1/4B	FLAT - MINERAL	II A 3, II C 2	WETLAND	815	815							0.15			
1	H	4	186.03	186.05	U	N/A	I A 2, II C 2	UPLAND	104		104						0.02			
1	H	4	186.05	186.14	PSS1/4B	FLAT - MINERAL	II A 3, II C 2	WETLAND	498	498							0.09			
1	H	4	186.14	186.21	U	N/A	I A 2, II C 2	UPLAND	323		323						0.06			
1	H	4	186.21	186.34	PSS1/4B	FLAT - MINERAL	II A 3, II C 2	WETLAND	708	708							0.13			
1	H	4	186.34	186.41	U	N/A	I A 2, II C 2	UPLAND	357		357						0.07			
1	H	4	186.41	186.44	PSS1/4B	FLAT - MINERAL	II A 3, II C 2	WETLAND	168	168							0.03			
1	H	4	186.44	186.45	U	N/A	I A 2, II C 2	UPLAND	40		40						0.01			
1	H	4	186.45	186.46	PSS1/4B	FLAT - MINERAL	II A 3, II C 2	WETLAND	62	62							0.01			
1	H	4	186.46	186.48	PEM1/SS1B	FLAT - ORGANIC	III A 2, II C 2	WETLAND	88	88							0.02			
1	H	4	186.48	186.52	PSS1/4B	FLAT - MINERAL	II A 3, II C 2	WETLAND	212	212							0.04			
1	H	4	186.52	186.64	PEM1/SS1B	FLAT - ORGANIC	III A 2, II C 2	WETLAND	638	638							0.12			
1	H	4	186.64	186.68	PSS1/4B	FLAT - MINERAL	II A 3, II C 2	WETLAND	230	230							0.04			
1	H	4	186.68	186.79	PSS1/EM1B	FLAT - ORGANIC	II C 2, III A 2	WETLAND	601	601							0.11			
1	H	4	186.79	186.87	PSS1/4B	FLAT - MINERAL	II A 3, II C 2	WETLAND	427	427							0.08			
1	H	4	186.87	186.90	PEM1/SS1B	FLAT - ORGANIC	III A 2, II A 2	WETLAND	112	112							0.02			
1	H	4	186.90	187.02	PSS1/4B	FLAT - MINERAL	II A 3, II C 2	WETLAND	656	656							0.12			
1	H	4	187.02	187.28	U	N/A	II A 2, II C 2	UPLAND	1363		1363						0.26			
1	H	5A	187.28	187.53	U	N/A	II A 2, II C 2	UPLAND	1315		1315							0.25		
1	H	5A	187.53	187.54	D	N/A	NONE	DISTURBED	90			90						0.02		
1	H	5A	187.54	187.55	R3UB/USH	RIVERINE	NONE	WETLAND	11	11								0.00		
1	H	WB-S	187.55	187.56	R3UB/USH	RIVERINE	NONE	WETLAND	93	93										0.02

SPREAD	SECTION	ROW MODE	FROM MP	TO MP	NWI CODE	HGM CLASS	VIERECK	DESCRIPTION	LINEAR FEET	WETLAND FEET	UPLAND FEET	DISTURBED FEET	Comments	Mode 1 - Ice Workpad (miles)	Mode 2 - Frost Pack (miles)	Mode 3 - Timber Mats	Mode 4 - Granular Workpad	Mode 5A - Grade	Mode 5B - Mountain Grade	Stream & Flood Plain Crossings
1	H	WB-S	187.56	187.57	D	N/A	NONE	DISTURBED	57			57								0.01
1	H	5A	187.57	187.60	D	N/A	NONE	DISTURBED	130			130								
1	H	5A	187.60	187.65	U	N/A	I A 2, II B 2	UPLAND	266		266							0.02		
1	H	4	187.65	187.67	U	N/A	I A 2, II B 2	UPLAND	105		105						0.02	0.05		
1	H	4	187.67	187.70	U	N/A	I A 3, II B 2	UPLAND	174		174						0.03			
1	H	4	187.70	187.73	U	N/A	I A 3, II C 2	UPLAND	138		138						0.03			
1	H	4	187.73	187.75	U	N/A	II A 2, II C 2	UPLAND	102		102						0.02			
1	H	4	187.75	187.83	PSS4/1B	SLOPE	I A 3, II A 3	WETLAND	425	425							0.08			
1	H	4	187.83	187.90	PFO4/SS1B	SLOPE	I A 3, II B 2	WETLAND	389	389							0.07			
1	H	4	187.90	187.99	PSS4/1B	SLOPE	I A 3, II A 3	WETLAND	478	478							0.09			
1	H	4	187.99	188.03	U	N/A	I A 3, II A 3	UPLAND	212		212						0.04			
1	H	4	188.03	188.10	PSS4/1B	SLOPE	I A 3, II A 3	WETLAND	359	359							0.07			
1	H	4	188.10	188.13	U	N/A	I A 3, II C 2	UPLAND	151		151						0.03			
1	H	4	188.13	188.13	PSS4/1B	SLOPE	I A 3, II A 3	WETLAND	31	31							0.01			
1	H	4	188.13	188.14	PSS1/FO4B	SLOPE	II C 2, I A 3	WETLAND	4	4							0.00			
1	H	4	188.14	188.14	PSS4/1B	SLOPE	I A 3, II A 3	WETLAND	5	5							0.00			
1	H	4	188.14	188.36	PSS1/FO4B	SLOPE	II C 2, I A 3	WETLAND	1190	1190							0.23			
1	H	4	188.36	188.39	PSS1/4B	SLOPE	II C 2, I A 3	WETLAND	132	132							0.03			
1	H	4	188.39	188.56	U	N/A	I A 2	UPLAND	921		921						0.17			
1	H	4	188.56	188.59	PSS1/4B	SLOPE	II C 2, I A 3	WETLAND	153	153							0.03			
1	H	4	188.59	188.60	U	N/A	I A 2	UPLAND	42		42						0.01			
1	H	4	188.60	188.63	PSS1/4B	SLOPE	II C 2, I A 3	WETLAND	166	166							0.03			
1	H	4	188.63	188.69	U	N/A	I A 3	UPLAND	325		325						0.06			
1	H	4	188.69	188.70	R4SB	RIVERINE	NONE	WETLAND	58	58							0.01			
1	H	4	188.70	188.72	R4SB	RIVERINE	NONE	WETLAND	117	117							0.02			
1	H	4	188.72	188.73	PSS1A	RIVERINE	II B 1	WETLAND	40	40							0.01			
1	H	4	188.73	188.73	R4SB	RIVERINE	NONE	WETLAND	6	6							0.00			
1	H	3	188.73	188.74	R4SB	RIVERINE	NONE	WETLAND	30	30						0.01				
1	H	WB-S	188.74	188.76	R4SB	RIVERINE	NONE	WETLAND	90	90										0.02
1	H	3	188.76	188.77	R4SB	RIVERINE	NONE	WETLAND	60	60						0.01				
1	H	4	188.77	188.77	R4SB	RIVERINE	NONE	WETLAND	32	32							0.01			
1	H	4	188.77	188.80	U	N/A	I A 3	UPLAND	117		117						0.02			
1	H	4	188.80	188.81	PSS1/EM1C	RIVERINE	II C 2, III A 2	WETLAND	53	53							0.01			
1	H	4	188.81	188.88	U	N/A	I A 3	UPLAND	367		367						0.07			
1	H	4	188.88	188.88	R4SB	RIVERINE	NONE	WETLAND	0	0							0.00			
1	H	WB-S	188.88	188.89	R4SB	RIVERINE	NONE	WETLAND	58	58										0.01
1	H	WB-S	188.89	188.89	U	N/A	I A 3	UPLAND	32		32									0.01
1	H	4	188.89	188.91	U	N/A	I A 3	UPLAND	76		76						0.01			
1	H	4	188.91	188.92	PSS1A	RIVERINE	II B 1	WETLAND	93	93							0.02			
1	H	4	188.92	188.93	U	N/A	I A 3	UPLAND	10		10						0.00			
1	H	4	188.93	188.95	PSS1A	RIVERINE	II B 1	WETLAND	103	103							0.02			
1	H	4	188.95	188.96	PSS1/EM1E	RIVERINE	II C 2, III A 2	WETLAND	70	70							0.01			
1	H	4	188.96	188.98	PSS1A	RIVERINE	II B 1	WETLAND	135	135							0.03			
1	H	4	188.98	188.99	R4SB	RIVERINE	NONE	WETLAND	24	24							0.00			
1	H	WB-S	188.99	189.00	R4SB	RIVERINE	NONE	WETLAND	83	83										0.02
1	H	WB-S	189.00	189.01	PSS1/EM1C	RIVERINE	II C 2, III A 2	WETLAND	7	7										0.00
1	H	4	189.01	189.02	PSS1/EM1C	RIVERINE	II C 2, III A 2	WETLAND	89	89							0.02			
1	H	4	189.02	189.02	R4SB	RIVERINE	NONE	WETLAND	1	1							0.00			
1	H	3	189.02	189.04	R4SB	RIVERINE	NONE	WETLAND	99	99						0.02				
1	H	3	189.04	189.05	PSS1/EM1E	RIVERINE	II C 2, III A 2	WETLAND	21	21						0.00				
1	H	4	189.05	189.17	PSS1/EM1E	RIVERINE	II C 2, III A 2	WETLAND	660	660							0.12			
1	H	WB-S	189.17	189.17	PSS1/EM1E	RIVERINE	II C 2, III A 2	WETLAND	6	6										0.00
1	H	WB-S	189.17	189.18	R4SB	RIVERINE	NONE	WETLAND	41	41										0.01
1	H	WB-S	189.18	189.19	U	N/A	I A 3, II B 2	UPLAND	43		43									0.01
1	H	4	189.19	189.41	U	N/A	I A 3, II B 2	UPLAND	1198		1198						0.23			
1	H	4	189.41	189.43	U	N/A	I A 3, II C 2	UPLAND	84		84						0.02			
1	H	4	189.43	189.44	PSS1/EM1C	RIVERINE	II B 2, III A 2	WETLAND	34	34							0.01			
1	H	4	189.44	189.46	U	N/A	I A 2, II C 2	UPLAND	122		122						0.02			
1	H	4	189.46	189.47	PSS1/EM1C	RIVERINE	II B 2, III A 2	WETLAND	30	30							0.01			
1	H	4	189.47	189.48	U	N/A	I A 2, II C 2	UPLAND	74		74						0.01			
1	H	4	189.48	189.52	PSS1/EM1C	RIVERINE	II B 2, III A 2	WETLAND	232	232							0.04			
1	H	4	189.52	189.53	PEM1F	DEPRESSIONAL	III A 3	WETLAND	20	20							0.00			
1	H	4	189.53	189.54	PSS1/EM1C	RIVERINE	II B 2, III A 2	WETLAND	71	71							0.01			
1	H	4	189.54	189.56	PEM1F	DEPRESSIONAL	III A 3	WETLAND	98	98							0.02			
1	H	4	189.56	189.68	U	N/A	I A 3, II C 2	UPLAND	647		647						0.12			
1	H	WB-S	189.68	189.70	U	N/A	I A 3, II C 2	UPLAND	90		90									0.02
1	H	4	189.70	189.81	U	N/A	I A 3, II C 2	UPLAND	580		580						0.11			
1	H	4	189.81	189.86	PSS1/EM1B	FLAT - ORGANIC	II C 2, III A 2	WETLAND	257	257							0.05			
1	H	4	189.86	189.95	PSS1/FO4B	FLAT - ORGANIC	I A 3, II B 2	WETLAND	483	483							0.09			
1	H	4	189.95	189.96	U	N/A	I A 3, II B 2	UPLAND	55		55						0.01			
1	H	4	189.96	189.96	PSS1A	RIVERINE	II B 2, II C 2	WETLAND	4	4							0.00			
1	H	WB-S	189.96	189.97	PSS1A	RIVERINE	II B 2, II C 2	WETLAND	30	30										0.01

SPREAD	SECTION	ROW MODE	FROM MP	TO MP	NWI CODE	HGM CLASS	VIERECK	DESCRIPTION	LINEAR FEET	WETLAND FEET	UPLAND FEET	DISTURBED FEET	Comments	Mode 1 - Ice Workpad (miles)	Mode 2 - Frost Pack (miles)	Mode 3 - Timber Mats	Mode 4 - Granular Workpad	Mode 5A - Grade	Mode 5B - Mountain Grade	Stream & Flood Plain Crossings
1	H	WB-S	189.97	189.97	U	N/A	I A 3, II B 2	UPLAND	30		30									0.01
1	H	4	189.97	189.98	U	N/A	I A 3, II B 2	UPLAND	26		26						0.00			
1	H	4	189.98	190.37	PSS1/4B	FLAT - ORGANIC	I A 3, II D 2	WETLAND	2078	2078							0.39			
1	H	4	190.37	190.39	PSS1/EM1B	SLOPE	II C 2, III A 2	WETLAND	78	78							0.01			
1	H	4	190.39	190.65	PSS1/FO4B	FLAT - ORGANIC	I A 3, II B 2	WETLAND	1397	1397							0.26			
1	H	4	190.65	190.65	PSS1/4B	FLAT - ORGANIC	II A 3, II C 2	WETLAND	15	15							0.00			
1	H	4	190.65	190.67	PSS1C	DEPRESSIONAL	II B 2, II C 2	WETLAND	96	96							0.02			
1	H	WB-S	190.67	190.68	PSS1C	DEPRESSIONAL	II B 2, II C 2	WETLAND	39	39										0.01
1	H	WB-S	190.68	190.69	PSS1/4B	FLAT - ORGANIC	II A 3, II C 2	WETLAND	36	36										0.01
1	H	WB-S	190.69	190.72	R4SBA	RIVERINE	NONE	WETLAND	198	198										0.04
1	H	WB-S	190.72	190.76	D	N/A	NONE	DISTURBED	176			176								0.03
1	H	5A	190.76	190.76	D	N/A	NONE	DISTURBED	1			1						0.00		
1	H	5A	190.76	190.84	U	N/A	II B 2	UPLAND	462		462							0.09		
1	H	5A	190.84	191.03	U	N/A	I A 2	UPLAND	959		959							0.18		
1	H	5A	191.03	191.03	D	N/A	NONE	DISTURBED	26			26						0.00		
1	H	5A	191.03	191.08	U	N/A	I A 2, II C 2	UPLAND	241		241							0.05		
1	H	5A	191.08	191.61	U	N/A	I A 3, II B 2	UPLAND	2846		2846							0.54		
1	H	5A	191.61	191.70	U	N/A	I C 2, II C 2	UPLAND	460		460							0.09		
1	H	5A	191.70	191.73	U	N/A	II B 2, II C 2	UPLAND	157		157							0.03		
1	H	5A	191.73	191.74	U	N/A	I C 2, II C 2	UPLAND	63		63							0.01		
1	H	5A	191.74	191.82	U	N/A	II B 2, II C 2	UPLAND	416		416							0.08		
1	H	5A	191.82	191.92	U	N/A	I C 2, II C 2	UPLAND	537		537							0.10		
1	H	5A	191.92	191.94	U	N/A	II B 2, II C 2	UPLAND	65		65							0.01		
1	H	5A	191.94	191.95	U	N/A	I C 2, II C 2	UPLAND	63		63							0.01		
1	H	5A	191.95	192.14	U	N/A	II B 2, II C 2	UPLAND	1011		1011							0.19		
1	H	5A	192.14	192.15	PSS1/EM1C	SLOPE	II B 2, III A 2	WETLAND	68	68								0.01		
1	H	5A	192.15	192.47	U	N/A	II B 2, II C 2	UPLAND	1683		1683							0.32		
1	H	5A	192.47	192.48	PSS1/EM1C	SLOPE	II B 2, III A 2	WETLAND	29	29								0.01		
1	H	5A	192.48	192.65	U	N/A	II B 2, II C 2	UPLAND	909		909							0.17		
1	H	5A	192.65	192.68	U	N/A	I A 2, II B 2	UPLAND	157		157							0.03		
1	H	5A	192.68	192.83	U	N/A	II B 2, II C 2	UPLAND	811		811							0.15		
1	H	5A	192.83	192.86	PSS1C	RIVERINE	II B 2, II C 2	WETLAND	158	158								0.03		
1	H	5A	192.86	192.90	U	N/A	II B 2, II C 2	UPLAND	204		204							0.04		
1	H	5A	192.90	192.92	PSS1C	RIVERINE	II B 2, II C 2	WETLAND	119	119								0.02		
1	H	5A	192.92	192.98	U	N/A	I C 2, II B 2	UPLAND	281		281							0.05		
1	H	5A	192.98	192.99	PSS1C	RIVERINE	II B 2, II C 2	WETLAND	54	54								0.01		
1	H	5A	192.99	193.00	U	N/A	II B 2, II C 2	UPLAND	48		48							0.01		
1	H	5A	193.00	193.03	U	N/A	I A 2, II C 2	UPLAND	194		194							0.04		
1	H	5A	193.03	193.06	U	N/A	II B 2, II C 2	UPLAND	140		140							0.03		
1	H	5A	193.06	193.08	PSS1C	RIVERINE	II B 2, II C 2	WETLAND	123	123								0.02		
1	H	5A	193.08	193.10	U	N/A	II B 2, II C 2	UPLAND	108		108							0.02		
1	H	5A	193.10	193.11	PSS1C	RIVERINE	II B 2, II C 2	WETLAND	26	26								0.00		
1	H	5A	193.11	193.15	U	N/A	II B 2, II C 2	UPLAND	216		216							0.04		
1	H	5A	193.15	193.16	PSS1C	RIVERINE	II B 2, II C 2	WETLAND	59	59								0.01		
1	H	5A	193.16	193.18	U	N/A	II B 2, II C 2	UPLAND	84		84							0.02		
1	H	5A	193.18	193.21	U	N/A	I A 2, II C 2	UPLAND	180		180							0.03		
1	H	5A	193.21	193.22	PEM1F	DEPRESSIONAL	III A 2	WETLAND	72	72								0.01		
1	H	5A	193.22	193.30	U	N/A	I A 2, II C 2	UPLAND	385		385							0.07		
1	H	5A	193.30	193.31	U	N/A	I A 2, II C 2	UPLAND	96		96							0.02		
1	H	5A	193.31	193.32	D	N/A	NONE	DISTURBED	52			52						0.01		
1	H	5A	193.32	193.45	U	N/A	II B 2	UPLAND	639		639							0.12		
1	H	5A	193.45	193.54	U	N/A	I C 2, II B 2	UPLAND	499		499							0.09		
1	H	5A	193.54	193.55	PSS1C	RIVERINE	II B 2, III A 1	WETLAND	40	40								0.01		
1	H	5A	193.55	193.58	U	N/A	I C 2, II B 2	UPLAND	171		171							0.03		
1	H	5A	193.58	193.59	R3UB/USH	RIVERINE	NONE	WETLAND	27	27								0.01		
1	H	3	193.59	193.59	R3UB/USH	RIVERINE	NONE	WETLAND	12	12						0.00				
1	H	3	193.59	193.59	U	N/A	II B 2	UPLAND	18		18					0.00				
1	H	5A	193.59	193.60	U	N/A	II B 2	UPLAND	60		60							0.01		
1	H	WB-S	193.60	193.63	U	N/A	II B 2	UPLAND	129		129									0.02
1	H	WB-S	193.63	193.67	R4SB	RIVERINE	NONE	WETLAND	237	237										0.04
1	H	WB-S	193.67	193.71	U	N/A	I A 2, II D	UPLAND	204		204									0.04
1	H	5A	193.71	193.96	U	N/A	I A 2, II D	UPLAND	1302		1302							0.25		
1	H	5A	193.96	193.97	U	N/A	I A 3, II C 2	UPLAND	51		51							0.01		
1	H	5A	193.97	194.01	PSS1/4B	SLOPE	II A 3, II D	WETLAND	224	224								0.04		
1	H	5A	194.01	194.09	U	N/A	I A 3, II C 2	UPLAND	447		447							0.08		
1	H	5A	194.09	194.10	PSS4/1B	SLOPE	I A 3, II C 2	WETLAND	60	60								0.01		
1	H	5A	194.10	194.13	U	N/A	I A 3, II C 2	UPLAND	145		145							0.03		
1	H	5A	194.13	194.14	PSS4/1B	SLOPE	I A 3, II C 2	WETLAND	37	37								0.01		
1	H	5A	194.14	194.20	U	N/A	I A 3, II C 2	UPLAND	326		326							0.06		
1	H	5A	194.20	194.21	PSS4/1B	SLOPE	I A 3, II C 2	WETLAND	57	57								0.01		
1	H	5A	194.21	194.27	U	N/A	I A 3, II C 2	UPLAND	288		288							0.05		
1	H	5A	194.27	194.27	PSS1/FO4B	SLOPE	I A 3, II C 2	WETLAND	42	42								0.01		

SPREAD	SECTION	ROW MODE	FROM MP	TO MP	NWI CODE	HGM CLASS	VIERECK	DESCRIPTION	LINEAR FEET	WETLAND FEET	UPLAND FEET	DISTURBED FEET	Comments	Mode 1 - Ice Workpad (miles)	Mode 2 - Frost Pack (miles)	Mode 3 - Timber Mats	Mode 4 - Granular Workpad	Mode 5A - Grade	Mode 5B - Mountain Grade	Stream & Flood Plain Crossings
1	H	5A	194.27	194.30	U	N/A	I A 3, II C 2	UPLAND	155		155							0.03		
1	H	5A	194.30	194.32	PSS1/FO4B	SLOPE	I A 3, II C 2	WETLAND	68	68								0.01		
1	H	5A	194.32	194.36	U	N/A	I A 3, II C 2	UPLAND	224		224							0.04		
1	H	5A	194.36	194.38	PSS1/FO4B	SLOPE	I A 3, II C 2	WETLAND	137	137								0.03		
1	H	5A	194.38	194.44	U	N/A	I A 3, II C 2	UPLAND	288		288							0.05		
1	H	5A	194.44	194.47	PSS1/FO4B	SLOPE	I A 3, II C 2	WETLAND	167	167								0.03		
1	H	5A	194.47	194.81	U	N/A	I A 3, II C 2	UPLAND	1780		1780							0.34		
1	H	5A	194.81	195.04	PSS1A	RIVERINE	II B 2, II C 2	WETLAND	1218	1218								0.23		
1	H	5A	195.04	195.06	R3USC	RIVERINE	NONE	WETLAND	105	105								0.02		
1	H	5A	195.06	195.06	R3UBH	RIVERINE	NONE	WETLAND	21	21								0.00		
1	H	5A	195.06	195.07	R3USC	RIVERINE	NONE	WETLAND	19	19								0.00		
1	H	5A	195.07	195.07	PSS1A	RIVERINE	II B 2, II C 2	WETLAND	14	14								0.00		
1	H	5A	195.07	195.08	R3USC	RIVERINE	NONE	WETLAND	70	70								0.01		
1	H	5A	195.08	195.09	PSS1A	RIVERINE	II B 2, II C 2	WETLAND	17	17								0.00		
1	H	WB-S	195.09	195.09	PSS1A	RIVERINE	II B 2, II C 2	WETLAND	8	8										0.00
1	H	WB-S	195.09	195.11	R3USC	RIVERINE	NONE	WETLAND	121	121										0.02
1	H	WB-S	195.11	195.12	U	N/A	I A 2, III A 1	UPLAND	51		51									0.01
1	H	5A	195.12	195.24	U	N/A	I A 2, III A 1	UPLAND	638		638							0.12		
1	H	5A	195.24	195.24	D	N/A	NONE	DISTURBED	17			17						0.00		
1	H	5A	195.24	195.39	U	N/A	I A 2, II C 2	UPLAND	785		785							0.15		
1	H	4	195.39	195.40	U	N/A	I A 2, II C 2	UPLAND	61		61						0.01			
1	H	4	195.40	195.70	PSS1/4B	FLAT - MINERAL	II A 3, II D 2	WETLAND	1572	1572							0.30			
1	H	4	195.70	195.71	U	N/A	I A 3, II B 2	UPLAND	46		46						0.01			
1	H	4	195.71	195.73	PSS1/4B	FLAT - MINERAL	II A 3, II D 2	WETLAND	83	83							0.02			
1	H	4	195.73	195.73	U	N/A	I A 3, II B 2	UPLAND	42		42						0.01			
1	H	4	195.73	195.75	PSS1/4B	FLAT - MINERAL	II A 3, II D 2	WETLAND	83	83							0.02			
1	H	4	195.75	195.77	U	N/A	I A 3, II B 2	UPLAND	90		90						0.02			
1	H	4	195.77	195.77	PSS1/4B	FLAT - MINERAL	II D 2, II A 3	WETLAND	15	15							0.00			
1	H	4	195.77	195.77	U	N/A	I A 3, II B 2	UPLAND	17		17						0.00			
1	H	4	195.77	195.78	PSS1/4B	FLAT - MINERAL	II D 2, II A 3	WETLAND	37	37							0.01			
1	H	4	195.78	195.80	U	N/A	I A 3, II B 2	UPLAND	95		95						0.02			
1	H	4	195.80	195.81	PSS1/4B	FLAT - MINERAL	II A 3, II D 2	WETLAND	68	68							0.01			
1	H	4	195.81	195.82	U	N/A	I A 3, II B 2	UPLAND	46		46						0.01			
1	H	4	195.82	195.82	PSS1/4B	FLAT - MINERAL	II A 3, II D 2	WETLAND	3	3							0.00			
1	H	4	195.82	195.83	PSS1/4B	FLAT - MINERAL	II A 3, II D 2	WETLAND	48	48							0.01			
1	H	4	195.83	195.85	U	N/A	I A 3, II B 2	UPLAND	126		126						0.02			
1	H	4	195.85	195.89	PSS1/4B	FLAT - MINERAL	II A 3, II D 2	WETLAND	184	184							0.03			
1	H	4	195.89	195.93	U	N/A	I A 3, II B 2	UPLAND	242		242						0.05			
1	H	4	195.93	195.96	PSS1/4B	FLAT - MINERAL	II A 3, II D 2	WETLAND	150	150							0.03			
1	H	4	195.96	195.98	U	N/A	I A 3, II B 2	UPLAND	79		79						0.02			
1	H	4	195.98	196.00	PSS1/4B	FLAT - MINERAL	II A 3, II D 2	WETLAND	127	127							0.02			
1	H	4	196.00	196.01	U	N/A	I A 3, II B 2	UPLAND	63		63						0.01			
1	H	4	196.01	196.04	PSS1/4B	FLAT - MINERAL	II A 3, II D 2	WETLAND	127	127							0.02			
1	H	4	196.04	196.05	U	N/A	I A 3, II B 2	UPLAND	50		50						0.01			
1	H	4	196.05	196.09	PSS1/4B	FLAT - MINERAL	II D, II A 3	WETLAND	220	220							0.04			
1	H	4	196.09	196.10	U	N/A	I A 3, II B 2	UPLAND	67		67						0.01			
1	H	4	196.10	196.11	PSS1/4B	FLAT - MINERAL	II D, II A 3	WETLAND	57	57							0.01			
1	H	4	196.11	196.13	U	N/A	I A 3, II B 2	UPLAND	78		78						0.01			
1	H	4	196.13	196.15	PSS1/4B	FLAT - MINERAL	II D, II A 3	WETLAND	117	117							0.02			
1	H	4	196.15	196.17	U	N/A	I A 3, II B 2	UPLAND	88		88						0.02			
1	H	4	196.17	196.21	PSS1/4B	FLAT - MINERAL	II D, II A 3	WETLAND	221	221							0.04			
1	H	4	196.21	196.22	U	N/A	I A 3, II B 2	UPLAND	82		82						0.02			
1	H	4	196.22	196.23	PSS1/FO4B	FLAT - MINERAL	I A 3, II B 2	WETLAND	31	31							0.01			
1	H	4	196.23	196.26	PEM1/SS1B	FLAT - ORGANIC	III A 2, II C 2	WETLAND	144	144							0.03			
1	H	4	196.26	196.27	PSS1/FO4B	FLAT - MINERAL	I A 3, II B 2	WETLAND	49	49							0.01			
1	H	4	196.27	196.29	U	N/A	I A 3, II B 2	UPLAND	129		129						0.02			
1	H	WB-S	196.29	196.30	U	N/A	I A 3, II B 2	UPLAND	60		60									0.01
1	H	4	196.30	196.31	U	N/A	I A 3, II B 2	UPLAND	39		39						0.01			
1	H	4	196.31	196.32	PSS1/4B	SLOPE	II A 3, II B 2	WETLAND	64	64							0.01			
1	H	4	196.32	196.33	U	N/A	I A 3, II B 2	UPLAND	65		65						0.01			
1	H	4	196.33	196.34	PSS1/FO4B	FLAT - MINERAL	I A 3, II B 2	WETLAND	60	60							0.01			
1	H	4	196.34	196.35	U	N/A	I C 2, II B 2	UPLAND	36		36						0.01			
1	H	4	196.35	196.37	PSS1/FO4B	FLAT - MINERAL	I A 3, II B 2	WETLAND	84	84							0.02			
1	H	4	196.37	196.39	U	N/A	I A 3, II B 2	UPLAND	111		111						0.02			
1	H	4	196.39	196.41	PSS1/FO4B	FLAT - MINERAL	I A 3, II C 2	WETLAND	113	113							0.02			
1	H	4	196.41	196.42	U	N/A	I A 3, II B 2	UPLAND	40		40						0.01			
1	H	4	196.42	196.45	PSS1/EM1B	FLAT - ORGANIC	II C 2, III A 2	WETLAND	155	155							0.03			
1	H	4	196.45	196.51	PSS1/FO4B	FLAT - ORGANIC	I A 3, II C 2	WETLAND	336	336							0.06			
1	H	4	196.51	196.52	D	N/A	NONE	DISTURBED	64			64					0.01			
1	H	4	196.52	196.67	PSS1B	FLAT - ORGANIC	II C 2, II B 2	WETLAND	802	802							0.15			
1	H	4	196.67	196.69	PSS1/FO4B	SLOPE	I A 3, II B 2	WETLAND	63	63							0.01			
1	H	4	196.69	196.71	PSS1B	FLAT - ORGANIC	II C 2, II B 2	WETLAND	150	150							0.03			

SPREAD	SECTION	ROW MODE	FROM MP	TO MP	NWI CODE	HGM CLASS	VIERECK	DESCRIPTION	LINEAR FEET	WETLAND FEET	UPLAND FEET	DISTURBED FEET	Comments	Mode 1 - Ice Workpad (miles)	Mode 2 - Frost Pack (miles)	Mode 3 - Timber Mats	Mode 4 - Granular Workpad	Mode 5A - Grade	Mode 5B - Mountain Grade	Stream & Flood Plain Crossings
1	H	4	196.71	196.73	PSS1/FO4B	SLOPE	I A 3, II B 2	WETLAND	76	76							0.01			
1	H	4	196.73	196.84	PSS1B	FLAT - ORGANIC	II C 2, II B 2	WETLAND	586	586							0.11			
1	H	4	196.84	196.85	PSS1B	SLOPE	II B 2, II C 2	WETLAND	62	62							0.01			
1	H	4	196.85	196.97	PSS1B	FLAT - ORGANIC	II C 2, II B 2	WETLAND	635	635							0.12			
1	H	4	196.97	196.98	PSS1/FO4B	SLOPE	I A 3, II B 2	WETLAND	44	44							0.01			
1	H	4	196.98	197.00	PSS1/4B	FLAT - ORGANIC	II C 2, II A 3	WETLAND	127	127							0.02			
1	H	4	197.00	197.01	PSS1/FO4B	FLAT - ORGANIC	I A 3, II B 2	WETLAND	30	30							0.01			
1	H	4	197.01	197.04	PSS1/4B	FLAT - ORGANIC	II C 2, II A 3	WETLAND	155	155							0.03			
1	H	4	197.04	197.07	PSS1/FO4B	SLOPE	I A 3, II B 2	WETLAND	188	188							0.04			
1	H	4	197.07	197.15	PSS1/4B	FLAT - ORGANIC	II C 2, II A 3	WETLAND	381	381							0.07			
1	H	4	197.15	197.17	PSS4/1B	FLAT - ORGANIC	II A 2, II C 2	WETLAND	103	103							0.02			
1	H	4	197.17	197.29	PSS1/4B	FLAT - ORGANIC	II C 2, II A 3	WETLAND	640	640							0.12			
1	H	4	197.29	197.30	PSS4/1B	FLAT - ORGANIC	II A 2, II C 2	WETLAND	69	69							0.01			
1	H	4	197.30	197.31	PSS1/4B	FLAT - ORGANIC	II C 2, II A 3	WETLAND	75	75							0.01			
1	H	4	197.31	197.33	PSS4/1B	FLAT - ORGANIC	II A 2, II C 2	WETLAND	56	56							0.01			
1	H	4	197.33	197.35	PSS1/4B	FLAT - ORGANIC	II C 2, II A 3	WETLAND	127	127							0.02			
1	H	4	197.35	197.42	PSS1/FO4B	FLAT - ORGANIC	I A 3, II C 2	WETLAND	381	381							0.07			
1	H	4	197.42	197.45	U	N/A	I C 2, II B 2	UPLAND	141		141						0.03			
1	H	4	197.45	197.48	PSS1/FO4B	FLAT - ORGANIC	I A 3, II C 2	WETLAND	177	177							0.03			
1	H	4	197.48	197.50	U	N/A	I C 2, II B 2	UPLAND	74		74						0.01			
1	H	4	197.50	197.65	PSS1/FO4B	FLAT - ORGANIC	I A 3, II C 2	WETLAND	816	816							0.15			
1	H	4	197.65	197.66	U	N/A	I A 2, II B 2	UPLAND	76		76						0.01			
1	H	WB-S	197.66	197.68	U	N/A	I A 2, II B 2	UPLAND	60		60									0.01
1	H	4	197.68	197.75	U	N/A	I A 2, II B 2	UPLAND	376		376						0.07			
1	H	4	197.75	197.75	R4SBC	RIVERINE	NONE	WETLAND	14	14							0.00			
1	H	WB-S	197.75	197.75	R4SBC	RIVERINE	NONE	WETLAND	2	2										0.00
1	H	WB-S	197.75	197.76	U	N/A	II B 2	UPLAND	40		40									0.01
1	H	WB-S	197.76	197.76	PSS1/4B	FLAT - ORGANIC	II D, II A 3	WETLAND	18	18										0.00
1	H	4	197.76	197.87	PSS1/4B	FLAT - ORGANIC	II D, II A 3	WETLAND	561	561							0.11			
1	H	4	197.87	197.88	U	N/A	I C 2, II B 2	UPLAND	52		52						0.01			
1	H	4	197.88	197.91	PSS1/4B	SLOPE	II D, II A 3	WETLAND	172	172							0.03			
1	H	4	197.91	197.97	PSS1/4B	FLAT - ORGANIC	II D, II A 3	WETLAND	323	323							0.06			
1	H	4	197.97	197.99	PSS1/4B	SLOPE	II D, II A 3	WETLAND	114	114							0.02			
1	H	4	197.99	198.13	PSS1/4B	FLAT - ORGANIC	II D, II A 3	WETLAND	740	740							0.14			
1	H	4	198.13	198.16	U	N/A	I A 3, II C 2	UPLAND	155		155						0.03			
1	H	4	198.16	198.22	PSS1/4B	FLAT - ORGANIC	II D, II A 3	WETLAND	284	284							0.05			
1	H	4	198.22	198.32	U	N/A	I A 3, II C 2	UPLAND	547		547						0.10			
1	H	4	198.32	198.36	U	N/A	I A 2, II C 2	UPLAND	231		231						0.04			
1	H	4	198.36	198.52	U	N/A	I A 3, II C 2	UPLAND	815		815						0.15			
1	H	4	198.52	199.03	PSS1/4B	FLAT - ORGANIC	II C 2, II A 3	WETLAND	2681	2681							0.51			
1	H	4	199.03	199.08	U	N/A	I A 2, II C 2	UPLAND	314		314						0.06			
1	H	WB-S	199.08	199.09	U	N/A	I A 2, II C 2	UPLAND	34		34									0.01
1	H	WB-S	199.09	199.09	R4SBC	RIVERINE	NONE	WETLAND	14	14										0.00
1	H	WB-S	199.09	199.10	PSS1C	RIVERINE	II B 2	WETLAND	25	25										0.00
1	H	WB-S	199.10	199.10	R4SBC	RIVERINE	NONE	WETLAND	12	12										0.00
1	H	WB-S	199.10	199.10	U	N/A	I A 2, II C 2	UPLAND	5		5									0.00
1	H	4	199.10	199.11	U	N/A	I A 2, II C 2	UPLAND	67		67						0.01			
1	H	4	199.11	199.25	PSS1/4B	FLAT - ORGANIC	II C 2, II A 3	WETLAND	713	713							0.14			
1	H	4	199.25	199.73	PFO4/SS1B	SLOPE	I A 3, II C 2	WETLAND	2554	2554							0.48			
1	H	4	199.73	199.89	PSS1/4B	FLAT - ORGANIC	II C 2, II A 2	WETLAND	847	847							0.16			
1	H	4	199.89	199.90	PSS1C	RIVERINE	II B 2, II C 2	WETLAND	18	18							0.00			
1	H	WB-S	199.90	199.91	PSS1C	RIVERINE	II B 2, II C 2	WETLAND	60	60										0.01
1	H	4	199.91	199.91	PSS1C	RIVERINE	II B 2, II C 2	WETLAND	20	20							0.00			
1	H	4	199.91	199.96	PSS1/FO4B	FLAT - ORGANIC	II C 2, I A 2	WETLAND	238	238							0.05			
1	H	4	199.96	199.97	PSS1/4C	SLOPE	II C 2, II A 3	WETLAND	75	75							0.01			
1	H	4	199.97	200.08	PSS1/4B	FLAT - ORGANIC	II C 2, II A 3	WETLAND	575	575							0.11			
1	H	4	200.08	200.09	PSS1/4B	FLAT - ORGANIC	II C 2, II A 2	WETLAND	33	33							0.01			
1	H	4	200.09	200.10	PSS1/EM1B	SLOPE	II C 2, III A 2	WETLAND	49	49							0.01			
1	H	4	200.10	200.11	PSS1/4B	FLAT - ORGANIC	II C 2, II A 2	WETLAND	94	94							0.02			
1	H	4	200.11	200.13	PSS1/EM1B	SLOPE	II C 2, III A 2	WETLAND	61	61							0.01			
1	H	4	200.13	200.14	PSS1/4B	FLAT - ORGANIC	II C 2, II A 2	WETLAND	77	77							0.01			
1	H	4	200.14	200.17	PSS1/EM1B	FLAT - ORGANIC	II C 2, III A 2	WETLAND	144	144							0.03			
1	H	4	200.17	200.17	PSS1/4B	FLAT - ORGANIC	II C 2, II A 2	WETLAND	21	21							0.00			
1	H	4	200.17	200.18	PSS1/EM1B	FLAT - ORGANIC	II C 2, III A 2	WETLAND	73	73							0.01			
1	H	4	200.18	200.21	PSS1/4B	FLAT - ORGANIC	II C 2, II A 2	WETLAND	150	150							0.03			
1	H	4	200.21	200.23	PSS1/EM1B	FLAT - ORGANIC	II C 2, III A 2	WETLAND	73	73							0.01			
1	H	4	200.23	200.25	PSS1/4B	FLAT - ORGANIC	II C 2, II A 2	WETLAND	99	99							0.02			
1	H	4	200.25	200.26	PSS1/EM1B	SLOPE	II C 2, III A 2	WETLAND	62	62							0.01			
1	H	4	200.26	200.27	PSS1/4B	FLAT - ORGANIC	II C 2, II A 2	WETLAND	83	83							0.02			
1	H	4	200.27	200.28	PSS1/EM1B	SLOPE	II C 2, III A 2	WETLAND	40	40							0.01			
1	H	4	200.28	200.30	PSS1/4B	FLAT - ORGANIC	II C 2, II A 2	WETLAND	113	113							0.02			
1	H	4	200.30	200.31	PSS1/4B	FLAT - ORGANIC	II C 2, II A 3	WETLAND	28	28							0.01			

SPREAD	SECTION	ROW MODE	FROM MP	TO MP	NWI CODE	HGM CLASS	VIERECK	DESCRIPTION	LINEAR FEET	WETLAND FEET	UPLAND FEET	DISTURBED FEET	Comments	Mode 1 - Ice Workpad (miles)	Mode 2 - Frost Pack (miles)	Mode 3 - Timber Mats	Mode 4 - Granular Workpad	Mode 5A - Grade	Mode 5B - Mountain Grade	Stream & Flood Plain Crossings
1	H	4	200.31	200.32	PSS1/4B	FLAT - ORGANIC	II C 2, II A 2	WETLAND	58	58							0.01			
1	H	4	200.32	200.48	PSS1/4B	FLAT - ORGANIC	II C 2, II A 3	WETLAND	878	878							0.17			
1	H	4	200.48	200.58	PSS1/FO4B	FLAT - ORGANIC	II C 2, I A 2	WETLAND	530	530							0.10			
1	H	WB-S	200.58	200.59	PSS1/FO4B	FLAT - ORGANIC	II C 2, I A 2	WETLAND	25	25										0.00
1	H	WB-S	200.59	200.60	R4SBC	RIVERINE	NONE	WETLAND	31	31										0.01
1	H	WB-S	200.60	200.60	PFO4C	RIVERINE	I A 2	WETLAND	34	34										0.01
1	H	4	200.60	200.60	PFO4C	RIVERINE	I A 2	WETLAND	1	1							0.00			
1	H	4	200.60	200.60	R4SBC	RIVERINE	NONE	WETLAND	8	8							0.00			
1	H	4	200.60	200.72	U	N/A	I A 2, II C 2	UPLAND	631		631						0.12			
1	H	4	200.72	200.74	PSS1/4B	SLOPE	II C 2, II A 3	WETLAND	103	103							0.02			
1	H	4	200.74	200.82	U	N/A	I A 2, II C 2	UPLAND	412		412						0.08			
1	H	4	200.82	200.89	PSS1/4B	SLOPE	II C 2, II A 3	WETLAND	356	356							0.07			
1	H	4	200.89	200.91	PEM1/SS1B	SLOPE	III A 2, II C 2	WETLAND	107	107							0.02			
1	H	4	200.91	200.96	PSS1/4B	SLOPE	II C 2, II A 3	WETLAND	276	276							0.05			
1	H	4	200.96	200.98	PEM1/SS1E	SLOPE	III A 2, II C 2	WETLAND	87	87							0.02			
1	H	4	200.98	200.98	R4SBC	RIVERINE	NONE	WETLAND	20	20							0.00			
1	H	4	200.98	201.01	PEM1/SS1E	SLOPE	III A 2, II C 2	WETLAND	152	152							0.03			
1	H	4	201.01	201.06	PSS4/1B	SLOPE	II A 2, II C 2	WETLAND	263	263							0.05			
1	H	4	201.06	201.07	PEM1/SS1E	SLOPE	III A 2, II C 2	WETLAND	68	68							0.01			
1	H	4	201.07	201.09	PSS1/4B	SLOPE	II C 2, II A 3	WETLAND	77	77							0.01			
1	H	4	201.09	201.16	PSS1/4B	FLAT - ORGANIC	II B 2, II A 2	WETLAND	365	365							0.07			
1	H	4	201.16	201.19	PSS3/4B	SLOPE	II C 2, II A 3	WETLAND	190	190							0.04			
1	H	4	201.19	201.21	PSS3/4B	FLAT - ORGANIC	II C 2, II A 3	WETLAND	77	77							0.01			
1	H	4	201.21	201.22	PEM1/SS1C	SLOPE	III A 2, II C 2	WETLAND	48	48							0.01			
1	H	4	201.22	201.26	PSS3/4B	FLAT - ORGANIC	II C 2, II A 3	WETLAND	230	230							0.04			
1	H	4	201.26	201.27	PEM1/SS1C	SLOPE	III A 2, II C 2	WETLAND	36	36							0.01			
1	H	4	201.27	201.31	PSS3/4B	FLAT - ORGANIC	II C 2, II A 3	WETLAND	223	223							0.04			
1	H	4	201.31	201.32	PEM1/SS1B	DEPRESSIONAL	III A 2, II C 2	WETLAND	72	72							0.01			
1	H	4	201.32	201.34	PSS1B	DEPRESSIONAL	II C 2	WETLAND	97	97							0.02			
1	H	5A	201.34	201.35	PSS1B	DEPRESSIONAL	II C 2	WETLAND	45	45								0.01		
1	H	5A	201.35	201.36	U	N/A	I A 3, II C 2	UPLAND	60		60							0.01		
1	H	5A	201.36	201.37	PSS1/4B	SLOPE	II A 3, II C 2	WETLAND	29	29								0.01		
1	H	5A	201.37	201.55	U	N/A	I A 3, II C 2	UPLAND	958		958							0.18		
1	H	5A	201.55	201.56	PSS1/4B	SLOPE	II A 3, II C 2	WETLAND	75	75								0.01		
1	H	5A	201.56	201.57	U	N/A	I A 3, II C 2	UPLAND	45		45							0.01		
1	H	5A	201.57	201.59	PSS1/4B	SLOPE	II A 3, II C 2	WETLAND	86	86								0.02		
1	H	5A	201.59	201.80	U	N/A	I A 3, II C 2	UPLAND	1113		1113							0.21		
1	H	5A	201.80	201.81	U	N/A	II A 2, II C 2	UPLAND	58		58							0.01		
1	H	5A	201.81	201.83	U	N/A	I A 3, II C 2	UPLAND	110		110							0.02		
1	H	WB-S	201.83	201.84	U	N/A	I A 3, II C 2	UPLAND	37		37									0.01
1	H	WB-S	201.84	201.85	R3USC	RIVERINE	NONE	WETLAND	91	91										0.02
1	H	WB-S	201.85	201.86	R3UBH	RIVERINE	NONE	WETLAND	18	18										0.00
1	H	WB-S	201.86	201.87	R3USC	RIVERINE	NONE	WETLAND	83	83										0.02
1	H	WB-S	201.87	201.87	PSS1A	RIVERINE	II B 2, II C 2	WETLAND	11	11										0.00
1	H	5A	201.87	201.93	PSS1A	RIVERINE	II B 2, II C 2	WETLAND	288	288								0.05		
1	H	5A	201.93	202.04	U	N/A	I A 2	UPLAND	575		575							0.11		
1	H	5A	202.04	202.13	PFO4/SS4B	FLAT - ORGANIC	I A 2, II C 2	WETLAND	500	500								0.09		
1	H	5A	202.13	202.18	U	N/A	I A 2, II B 2	UPLAND	227		227							0.04		
1	H	4	202.18	202.22	U	N/A	I A 2, II B 2	UPLAND	239		239						0.05			
1	H	4	202.22	202.23	PSS4/1B	SLOPE	II A 2, II C 2	WETLAND	60	60							0.01			
1	H	4	202.23	202.23	PSS1/EM1B	SLOPE	II C 2, III A 2	WETLAND	1	1							0.00			
1	H	WB-S	202.23	202.24	PSS1/EM1B	SLOPE	II C 2, III A 2	WETLAND	60	60										0.01
1	H	4	202.24	202.28	PSS1/EM1B	SLOPE	II C 2, III A 2	WETLAND	190	190							0.04			
1	H	4	202.28	202.40	PSS3/4B	FLAT - ORGANIC	II C 2, II A 3	WETLAND	610	610							0.12			
1	H	4	202.40	202.42	PSS4/1B	FLAT - ORGANIC	II A 2, II C 2	WETLAND	113	113							0.02			
1	H	4	202.42	202.47	PSS3/4B	FLAT - ORGANIC	II C 2, II A 3	WETLAND	261	261							0.05			
1	H	4	202.47	202.48	PSS4/1B	FLAT - ORGANIC	II A 2, II C 2	WETLAND	52	52							0.01			
1	H	4	202.48	202.49	PSS1C	SLOPE	II B 2	WETLAND	57	57							0.01			
1	H	4	202.49	202.55	PSS3/4B	FLAT - ORGANIC	II C 2, II A 3	WETLAND	343	343							0.06			
1	H	4	202.55	202.60	PSS1/4B	FLAT - ORGANIC	II B 2, II A 3	WETLAND	265	265							0.05			
1	H	WB-S	202.60	202.60	PSS1/4B	FLAT - ORGANIC	II B 2, II A 3	WETLAND	9	9										0.00
1	H	WB-S	202.60	202.61	PSS1C	SLOPE	II B 2	WETLAND	33	33										0.01
1	H	WB-S	202.61	202.62	U	N/A	I A 2	UPLAND	47		47									0.01
1	H	WB-S	202.62	202.62	PSS1/4B	FLAT - ORGANIC	II C 2, II A 3	WETLAND	1	1										0.00
1	H	4	202.62	202.65	PSS1/4B	FLAT - ORGANIC	II C 2, II A 3	WETLAND	163	163							0.03			
1	H	4	202.65	202.69	U	N/A	I A 2	UPLAND	232		232						0.04			
1	H	4	202.69	202.74	PSS1/4B	FLAT - ORGANIC	II C 2, II A 3	WETLAND	251	251							0.05			
1	H	4	202.74	202.75	U	N/A	I A 2	UPLAND	51		51						0.01			
1	H	4	202.75	202.83	PSS1/4B	FLAT - ORGANIC	II C 2, II A 3	WETLAND	401	401							0.08			
1	H	4	202.83	202.83	PSS1A	RIVERINE	II B 2	WETLAND	12	12							0.00			
1	H	WB-S	202.83	202.84	PSS1A	RIVERINE	II B 2	WETLAND	37	37										0.01
1	H	WB-S	202.84	202.84	U	N/A	I A 2	UPLAND	23		23									0.00

SPREAD	SECTION	ROW MODE	FROM MP	TO MP	NWI CODE	HGM CLASS	VIERECK	DESCRIPTION	LINEAR FEET	WETLAND FEET	UPLAND FEET	DISTURBED FEET	Comments	Mode 1 - Ice Workpad (miles)	Mode 2 - Frost Pack (miles)	Mode 3 - Timber Mats	Mode 4 - Granular Workpad	Mode 5A - Grade	Mode 5B - Mountain Grade	Stream & Flood Plain Crossings
1	H	4	202.84	202.85	U	N/A	I A 2	UPLAND	47		47						0.01			
1	H	4	202.85	202.89	PSS1/4B	FLAT - ORGANIC	II C 2, II A 3	WETLAND	193	193							0.04			
1	H	4	202.89	202.93	U	N/A	I A 2	UPLAND	229		229						0.04			
1	H	4	202.93	203.00	PSS1/4B	FLAT - ORGANIC	II C 2, II A 3	WETLAND	397	397							0.08			
1	H	4	203.00	203.04	U	N/A	I A 2	UPLAND	174		174						0.03			
1	H	4	203.04	203.07	PSS1/4B	FLAT - ORGANIC	II C 2, II A 3	WETLAND	162	162							0.03			
1	H	4	203.07	203.08	U	N/A	I A 2	UPLAND	77		77						0.01			
1	H	4	203.08	203.16	PSS1/4B	FLAT - ORGANIC	II C 2, II A 3	WETLAND	414	414							0.08			
1	H	4	203.16	203.17	U	N/A	I A 2	UPLAND	26		26						0.01			
1	H	4	203.17	203.25	PSS1/4B	FLAT - ORGANIC	II C 2, II A 3	WETLAND	431	431							0.08			
1	H	4	203.25	203.40	PSS1/EM1B	FLAT - ORGANIC	II C 2, III A 2	WETLAND	799	799							0.15			
1	H	4	203.40	203.49	PSS1/4B	FLAT - ORGANIC	II A 3, II C 2	WETLAND	454	454							0.09			
1	H	4	203.49	203.49	U	N/A	I A 3, II B 2	UPLAND	16		16						0.00			
1	H	WB-S	203.49	203.50	U	N/A	I A 3, II B 2	UPLAND	58		58									0.01
1	H	WB-S	203.50	203.50	PSS1/4B	FLAT - ORGANIC	II A 3, II C 2	WETLAND	2	2										0.00
1	H	4	203.50	203.53	PSS1/4B	FLAT - ORGANIC	II A 3, II C 2	WETLAND	153	153							0.03			
1	H	4	203.53	203.63	PSS1/EM1B	FLAT - ORGANIC	II C 2, III A 2	WETLAND	520	520							0.10			
1	H	4	203.63	203.64	U	N/A	I A 3, II B 2	UPLAND	64		64						0.01			
1	H	4	203.64	203.67	PSS1/4B	FLAT - ORGANIC	II A 3, II C 2	WETLAND	140	140							0.03			
1	H	4	203.67	203.70	PSS1/EM1B	FLAT - ORGANIC	II C 2, III A 2	WETLAND	156	156							0.03			
1	H	4	203.70	203.70	PSS1/4B	FLAT - ORGANIC	II A 3, II C 2	WETLAND	42	42							0.01			
1	H	4	203.70	203.71	U	N/A	I A 3, II B 2	UPLAND	47		47						0.01			
1	H	4	203.71	203.71	PSS1/4B	FLAT - ORGANIC	II A 3, II C 2	WETLAND	9	9							0.00			
1	H	4	203.71	203.74	PSS1/EM1B	FLAT - ORGANIC	II C 2, III A 2	WETLAND	114	114							0.02			
1	H	4	203.74	203.77	PSS1/4B	FLAT - ORGANIC	II A 3, II C 2	WETLAND	167	167							0.03			
1	H	4	203.77	203.82	PSS1/EM1B	FLAT - ORGANIC	II C 2, III A 2	WETLAND	281	281							0.05			
1	H	4	203.82	203.83	U	N/A	I A 2	UPLAND	51		51						0.01			
1	H	4	203.83	203.84	PSS1/EM1B	FLAT - ORGANIC	II C 2, III A 2	WETLAND	77	77							0.01			
1	H	4	203.84	203.85	U	N/A	I A 2	UPLAND	8		8						0.00			
1	H	WB-S	203.85	203.85	U	N/A	I A 2	UPLAND	7		7									0.00
1	H	WB-S	203.85	203.85	PSS1A	RIVERINE	II C 2	WETLAND	24	24										0.00
1	H	WB-S	203.85	203.86	PSS1/EM1B	FLAT - ORGANIC	II C 2, III A 2	WETLAND	29	29										0.01
1	H	4	203.86	203.90	PSS1/EM1B	FLAT - ORGANIC	II C 2, III A 2	WETLAND	201	201							0.04			
1	H	4	203.90	203.90	PSS1/EM1C	SLOPE	II C 2, III A 2	WETLAND	27	27							0.01			
1	H	4	203.90	203.92	PSS1/EM1B	FLAT - ORGANIC	II C 2, III A 2	WETLAND	119	119							0.02			
1	H	4	203.92	203.94	PSS1B	SLOPE	II C 2	WETLAND	101	101							0.02			
1	H	4	203.94	203.95	PSS1/EM1B	FLAT - ORGANIC	II C 2, III A 2	WETLAND	43	43							0.01			
1	H	4	203.95	203.96	U	N/A	I A 2	UPLAND	47		47						0.01			
1	H	4	203.96	203.98	PSS1/EM1B	FLAT - ORGANIC	II C 2, III A 2	WETLAND	94	94							0.02			
1	H	4	203.98	203.98	PSS1B	SLOPE	II C 2	WETLAND	14	14							0.00			
1	H	4	203.98	204.00	PSS1/EM1B	FLAT - ORGANIC	II C 2, III A 2	WETLAND	131	131							0.02			
1	H	4	204.00	204.02	PSS1/4B	FLAT - ORGANIC	II C 2, II A 3	WETLAND	74	74							0.01			
1	H	4	204.02	204.47	U	N/A	I A 2	UPLAND	2357		2357						0.45			
1	H	4	204.47	204.47	U	N/A	I A 2	UPLAND	44		44						0.01			
1	H	4	204.47	204.51	PSS1/EM1B	FLAT - ORGANIC	II C 2, III A 2	WETLAND	184	184							0.03			
1	H	4	204.51	204.52	U	N/A	I A 2	UPLAND	52		52						0.01			
1	H	4	204.52	204.59	PSS1/EM1B	FLAT - ORGANIC	II C 2, III A 2	WETLAND	369	369							0.07			
1	H	4	204.59	204.66	U	N/A	I A 2	UPLAND	386		386						0.07			
1	H	4	204.66	204.73	PSS1/4B	FLAT - ORGANIC	II C 2, II A 3	WETLAND	380	380							0.07			
1	H	4	204.73	204.75	U	N/A	I C 2, II B 2	UPLAND	86		86						0.02			
1	H	WB-S	204.75	204.75	U	N/A	I C 2, II B 2	UPLAND	29		29									0.01
1	H	WB-S	204.75	204.77	R3USC	RIVERINE	NONE	WETLAND	68	68										0.01
1	H	WB-S	204.77	204.78	U	N/A	I A 2, II C 2	UPLAND	53		53									0.01
1	H	4	204.78	204.78	U	N/A	I A 2, II C 2	UPLAND	30		30						0.01			
1	H	4	204.78	204.79	PSS1C	RIVERINE	II B 2	WETLAND	17	17							0.00			
1	H	4	204.79	204.80	U	N/A	I A 2, II C 2	UPLAND	65		65						0.01			
1	H	4	204.80	204.88	PSS1/4B	FLAT - ORGANIC	II D, II A 3	WETLAND	410	410							0.08			
1	H	4	204.88	204.91	U	N/A	I A 2, II C 2	UPLAND	202		202						0.04			
1	H	4	204.91	205.03	PSS1/FO4B	FLAT - ORGANIC	II C 2, I A 3	WETLAND	595	595							0.11			
1	H	4	205.03	205.18	PSS1/EM1B	FLAT - ORGANIC	II A 3, II C 2	WETLAND	800	800							0.15			
1	H	4	205.18	205.19	PSS4/1B	FLAT - ORGANIC	II A 3, II C 2	WETLAND	76	76							0.01			
1	H	4	205.19	205.21	PSS1/EM1B	SLOPE	II C 2, III A 2	WETLAND	62	62							0.01			
1	H	4	205.21	205.36	PSS4/1B	FLAT - ORGANIC	II A 3, II C 2	WETLAND	793	793							0.15			
1	H	4	205.36	205.36	PSS1/EM1C	SLOPE	II C 2, III A 2	WETLAND	25	25							0.00			
1	H	4	205.36	205.43	PSS4/1B	FLAT - ORGANIC	II A 3, II C 2	WETLAND	363	363							0.07			
1	H	4	205.43	205.48	PSS1/EM1B	SLOPE	II C 2, III A 2	WETLAND	254	254							0.05			
1	H	4	205.48	205.50	PSS1/4B	FLAT - MINERAL	II A 3, II C 2	WETLAND	98	98							0.02			
1	H	4	205.50	205.51	PSS1/EM1B	SLOPE	II C 2, III A 2	WETLAND	90	90							0.02			
1	H	4	205.51	205.52	PSS1/4B	FLAT - MINERAL	II A 3, II C 2	WETLAND	15	15							0.00			
1	H	4	205.52	205.53	PSS1/EM1B	SLOPE	II C 2, III A 2	WETLAND	55	55							0.01			
1	H	4	205.53	205.54	PSS1/4B	FLAT - MINERAL	II A 3, II C 2	WETLAND	77	77							0.01			
1	H	4	205.54	205.64	PSS1/EM1B	SLOPE	II C 2, III A 2	WETLAND	524	524							0.10			

SPREAD	SECTION	ROW MODE	FROM MP	TO MP	NWI CODE	HGM CLASS	VIERECK	DESCRIPTION	LINEAR FEET	WETLAND FEET	UPLAND FEET	DISTURBED FEET	Comments	Mode 1 - Ice Workpad (miles)	Mode 2 - Frost Pack (miles)	Mode 3 - Timber Mats	Mode 4 - Granular Workpad	Mode 5A - Grade	Mode 5B - Mountain Grade	Stream & Flood Plain Crossings
1	H	4	205.64	205.72	PSS4/1B	FLAT - MINERAL	II A 3, II C 2	WETLAND	434	434							0.08			
1	H	4	205.72	205.80	PSS1/EM1B	SLOPE	II C 2, III A 2	WETLAND	393	393							0.07			
1	H	4	205.80	205.85	PSS1/EM1B	FLAT - MINERAL	II C 2, III A 2	WETLAND	284	284							0.05			
1	H	4	205.85	205.91	PSS1/4B	FLAT - MINERAL	II C 2, II A 3	WETLAND	301	301							0.06			
1	H	4	205.91	206.01	PSS4/EM1B	FLAT - MINERAL	II A 3, III A 2	WETLAND	520	520							0.10			
1	H	4	206.01	206.03	PSS1/EM1C	SLOPE	II C 2, III A 2	WETLAND	111	111							0.02			
1	H	4	206.03	206.04	PSS1/EM1B	SLOPE	II C 2, III A 2	WETLAND	68	68							0.01			
1	H	4	206.04	206.06	PSS1/EM1C	SLOPE	II C 2, III A 2	WETLAND	99	99							0.02			
1	H	4	206.06	206.07	PSS1/4B	FLAT - MINERAL	II C 2, II A 3	WETLAND	61	61							0.01			
1	H	4	206.07	206.10	PSS1/EM1C	SLOPE	II C 2, III A 2	WETLAND	133	133							0.03			
1	H	4	206.10	206.17	PSS1/4B	FLAT - MINERAL	II C 2, II A 3	WETLAND	373	373							0.07			
1	H	4	206.17	206.19	PSS1/4B	SLOPE	II C 2, II A 3	WETLAND	102	102							0.02			
1	H	4	206.19	206.22	PSS1/EM1C	SLOPE	II C 2, III A 3	WETLAND	180	180							0.03			
1	H	4	206.22	206.25	PSS1/4B	FLAT - MINERAL	II C 2, II A 3	WETLAND	186	186							0.04			
1	H	4	206.25	206.26	PSS1/EM1C	SLOPE	II C 2, III A 3	WETLAND	30	30							0.01			
1	H	4	206.26	206.28	PSS1/4B	FLAT - MINERAL	II C 2, II A 3	WETLAND	88	88							0.02			
1	H	4	206.28	206.28	PSS1/EM1C	SLOPE	II C 2, III A 3	WETLAND	41	41							0.01			
1	H	4	206.28	206.28	PSS1/4B	FLAT - MINERAL	II C 2, II A 3	WETLAND	2	2							0.00			
1	H	4	206.28	206.29	PSS1/EM1C	SLOPE	II C 2, III A 3	WETLAND	39	39							0.01			
1	H	4	206.29	206.32	PSS1/4B	FLAT - MINERAL	II C 2, II A 3	WETLAND	129	129							0.02			
1	H	4	206.32	206.33	U	N/A	II B 2	UPLAND	44		44						0.01			
1	H	4	206.33	206.36	PSS1/4B	SLOPE	II C 2, II A 3	WETLAND	179	179							0.03			
1	H	4	206.36	206.38	U	N/A	I A 3, II C 2	UPLAND	101		101						0.02			
1	H	4	206.38	206.41	PSS1/FO4B	FLAT - MINERAL	I A 3, II C 2	WETLAND	164	164							0.03			
1	H	4	206.41	206.45	PSS1/4B	SLOPE	II C 2, II A 3	WETLAND	200	200							0.04			
1	H	4	206.45	206.45	PSS1/EM1C	DEPRESSIONAL	II C 2, III A 2	WETLAND	18	18							0.00			
1	H	4	206.45	206.47	PSS1/4B	SLOPE	II C 2, II A 3	WETLAND	94	94							0.02			
1	H	4	206.47	206.50	U	N/A	I A 2, II C 2	UPLAND	146		146						0.03			
1	H	4	206.50	206.51	PSS1/4B	SLOPE	II C 2, II A 3	WETLAND	75	75							0.01			
1	H	4	206.51	206.54	PSS1/EM1B	FLAT - MINERAL	II C 2, III A 2	WETLAND	180	180							0.03			
1	H	4	206.54	206.56	D	N/A	NONE	DISTURBED	57			57					0.01			
1	H	4	206.56	206.69	PSS1/4B	FLAT - MINERAL	II C 2, II A 3	WETLAND	687	687							0.13			
1	H	4	206.69	206.96	PSS1/EM1B	SLOPE	II C 2, III A 2	WETLAND	1426	1426							0.27			
1	H	4	206.96	206.97	U	N/A	I A 3, II B 2	UPLAND	73		73						0.01			
1	H	4	206.97	206.99	PSS1/4B	FLAT - MINERAL	I A 3, II C 2	WETLAND	120	120							0.02			
1	H	4	206.99	207.02	U	N/A	I A 3, II B 2	UPLAND	141		141						0.03			
1	H	4	207.02	207.02	PSS1/4B	FLAT - MINERAL	I A 3, II C 2	WETLAND	7	7							0.00			
1	H	4	207.02	207.06	U	N/A	I A 3, II B 2	UPLAND	186		186						0.04			
1	H	4	207.06	207.18	PSS1/4B	FLAT - MINERAL	I A 3, II C 2	WETLAND	663	663							0.13			
1	H	4	207.18	207.24	U	N/A	I A 3, II B 2	UPLAND	290		290						0.05			
1	H	4	207.24	207.39	PSS1/4B	FLAT - MINERAL	I A 3, II C 2	WETLAND	804	804							0.15			
1	H	4	207.39	207.40	PEM1/SS1E	FLAT - MINERAL	III A 2, II C 2	WETLAND	77	77							0.01			
1	H	4	207.40	207.42	PSS1/4B	FLAT - MINERAL	I A 3, II C 2	WETLAND	102	102							0.02			
1	H	4	207.42	207.46	U	N/A	I A 3, II B 2	UPLAND	199		199						0.04			
1	H	WB-S	207.46	207.46	U	N/A	I A 3, II B 2	UPLAND	3		3									0.00
1	H	WB-S	207.46	207.49	R3USC	RIVERINE	NONE	WETLAND	174	174										0.03
1	H	WB-S	207.49	207.50	R3UBH	RIVERINE	NONE	WETLAND	18	18										0.00
1	H	WB-S	207.50	207.51	R3USC	RIVERINE	NONE	WETLAND	63	63										0.01
1	H	WB-S	207.51	207.52	PSS1C	RIVERINE	II C 2	WETLAND	36	36										0.01
1	H	WB-S	207.52	207.53	U	N/A	I A 3, II B 2	UPLAND	97		97									0.02
1	H	4	207.53	207.57	U	N/A	I A 3, II B 2	UPLAND	217		217						0.04			
1	H	4	207.57	207.59	PSS1/4B	FLAT - ORGANIC	II C 2, II A 3	WETLAND	104	104							0.02			
1	H	4	207.59	207.69	PSS1/EM1B	FLAT - ORGANIC	II C 2, III A 2	WETLAND	526	526							0.10			
1	H	4	207.69	207.76	PSS4/1B	FLAT - ORGANIC	II A 2, II C 2	WETLAND	327	327							0.06			
1	H	4	207.76	207.77	PSS4/1B	FLAT - ORGANIC	II A 3, II C 2	WETLAND	51	51							0.01			
1	H	4	207.77	207.79	PSS4/1B	FLAT - ORGANIC	II A 2, II C 2	WETLAND	153	153							0.03			
1	H	4	207.79	207.80	PSS4/1B	FLAT - ORGANIC	II A 3, II C 2	WETLAND	27	27							0.01			
1	H	4	207.80	207.82	PSS1/EM1B	SLOPE	II C 2, III A 2	WETLAND	134	134							0.03			
1	H	4	207.82	208.06	PSS1/4B	FLAT - ORGANIC	II C 2, II A 2	WETLAND	1238	1238							0.23			
1	H	5A	208.06	208.08	PSS1/4B	FLAT - ORGANIC	II C 2, II A 2	WETLAND	104	104								0.02		
1	H	5A	208.08	208.17	PSS1/EM1B	FLAT - ORGANIC	II C 2, III A 2	WETLAND	493	493								0.09		
1	H	5A	208.17	208.25	U	N/A	I A 2, II C 2	UPLAND	406		406							0.08		
1	H	WB-S	208.25	208.25	U	N/A	I A 2, II C 2	UPLAND	28		28									0.01
1	H	WB-S	208.25	208.26	PSS1C	SLOPE	II C 2	WETLAND	49	49										0.01
1	H	WB-S	208.26	208.27	U	N/A	I A 2, II C 2	UPLAND	13		13									0.00
1	H	5A	208.27	208.45	U	N/A	I A 2, II C 2	UPLAND	974		974							0.18		
1	H	5A	208.45	208.54	PSS1B	FLAT - MINERAL	II C 2	WETLAND	446	446								0.08		
1	H	5A	208.54	208.58	U	N/A	I A 2, II C 2	UPLAND	220		220							0.04		
1	H	5A	208.58	208.59	PSS1B	FLAT - MINERAL	II B 2, II C 2	WETLAND	71	71								0.01		
1	H	5A	208.59	208.59	D	N/A	NONE	DISTURBED	15			15						0.00		
1	H	5A	208.59	208.61	PSS1B	FLAT - MINERAL	II B 2, II C 2	WETLAND	97	97								0.02		
1	H	5A	208.61	208.65	PSS1B	FLAT - MINERAL	II C 2	WETLAND	198	198								0.04		

SPREAD	SECTION	ROW MODE	FROM MP	TO MP	NWI CODE	HGM CLASS	VIERECK	DESCRIPTION	LINEAR FEET	WETLAND FEET	UPLAND FEET	DISTURBED FEET	Comments	Mode 1 - Ice Workpad (miles)	Mode 2 - Frost Pack (miles)	Mode 3 - Timber Mats	Mode 4 - Granular Workpad	Mode 5A - Grade	Mode 5B - Mountain Grade	Stream & Flood Plain Crossings
1	H	5A	208.65	208.66	U	N/A	I A 2, II C 2	UPLAND	84		84							0.02		
1	H	5A	208.66	208.67	PSS1C	RIVERINE	II C 2	WETLAND	9	9								0.00		
1	H	5A	208.67	208.68	PEM1/SS1C	RIVERINE	III A 3, II C 2	WETLAND	57	57								0.01		
1	H	5A	208.68	208.68	PSS1C	RIVERINE	II C 2	WETLAND	16	16								0.00		
1	H	5A	208.68	208.69	PEM1/SS1C	RIVERINE	III A 3, II C 2	WETLAND	51	51								0.01		
1	H	5A	208.69	208.74	PSS1C	RIVERINE	II C 2	WETLAND	253	253								0.05		
1	H	WB-S	208.74	208.74	PSS1C	RIVERINE	II C 2	WETLAND	24	24										0.00
1	H	WB-S	208.74	208.76	R3USC	RIVERINE	NONE	WETLAND	93	93										0.02
1	H	WB-S	208.76	208.78	R3UBH	RIVERINE	NONE	WETLAND	108	108										0.02
1	H	WB-S	208.78	208.78	R3USC	RIVERINE	NONE	WETLAND	16	16										0.00
1	H	WB-S	208.78	208.79	D	N/A	NONE	DISTURBED	59			59								0.01
1	H	5A	208.79	208.80	D	N/A	NONE	DISTURBED	6			6						0.00		
1	H	5A	208.80	208.80	PSS1C	RIVERINE	II C 2	WETLAND	47	47								0.01		
1	H	5A	208.80	208.87	U	N/A	I A 2, II C 2	UPLAND	346		346							0.07		
1	H	5A	208.87	208.87	U	N/A	I A 2, II C 2	UPLAND	18		18							0.00		
1	G	5A	208.87	208.89	U	N/A	I A 2, II C 2	UPLAND	105		105							0.02		
2	A	2	208.89	208.90	U	N/A	I A 2, II C 2	UPLAND	46		46				0.01					
2	A	2	208.90	209.11	U	N/A	I A 2, II C 2	UPLAND	1118		1118				0.21					
2	A	2	209.11	209.12	U	N/A	II B 2, II C 2	UPLAND	34		34				0.01					
2	A	2	209.12	209.14	U	N/A	I A 3, II B 2	UPLAND	117		117				0.02					
2	A	2	209.14	209.16	PSS1B	SLOPE	II C 2	WETLAND	84	84					0.02					
2	A	2	209.16	209.16	U	N/A	I A 3, II B 2	UPLAND	29		29				0.01					
2	A	WB-W	209.16	209.16	U	N/A	I A 3, II B 2	UPLAND	3		3									0.00
2	A	WB-W	209.16	209.17	R4SBC	RIVERINE	NONE	WETLAND	44	44										0.01
2	A	WB-W	209.17	209.18	U	N/A	II B 2	UPLAND	13		13									0.00
2	A	2	209.18	209.22	U	N/A	II B 2	UPLAND	242		242				0.05					
2	A	2	209.22	209.37	PSS1B	SLOPE	II C 2, II B 2	WETLAND	774	774					0.15					
2	A	2	209.37	209.39	PSS1/4B	SLOPE	II C 2, II A 2	WETLAND	140	140					0.03					
2	A	2	209.39	209.40	PSS1/EM1E	DEPRESSIONAL	II C 2, III A 2	WETLAND	22	22					0.00					
2	A	2	209.40	209.43	PSS1/4B	SLOPE	II C 2, II A 2	WETLAND	185	185					0.04					
2	A	2	209.43	209.45	PSS1/EM1E	DEPRESSIONAL	II C 2, III A 2	WETLAND	74	74					0.01					
2	A	2	209.45	209.46	PSS1/4B	SLOPE	II C 2, II A 2	WETLAND	49	49					0.01					
2	A	2	209.46	209.46	U	N/A	I A 3, II C 2	UPLAND	14		14				0.00					
2	A	2	209.46	209.47	PSS1/4B	SLOPE	II C 2, II A 2	WETLAND	81	81					0.02					
2	A	2	209.47	209.50	U	N/A	I A 3, II C 2	UPLAND	145		145				0.03					
2	A	2	209.50	209.51	PSS1/EM1E	SLOPE	II C 2, III A 3	WETLAND	36	36					0.01					
2	A	2	209.51	209.53	PSS1/4B	SLOPE	II C 2, II A 3	WETLAND	119	119					0.02					
2	A	2	209.53	209.54	PSS1/EM1E	SLOPE	II C 2, III A 3	WETLAND	49	49					0.01					
2	A	2	209.54	209.58	U	N/A	I A 3, II C 2	UPLAND	199		199				0.04					
2	A	2	209.58	209.60	PSS1/EM1E	SLOPE	II C 2, III A 3	WETLAND	117	117					0.02					
2	A	2	209.60	209.68	U	N/A	I A 3, II C 2	UPLAND	428		428				0.08					
2	A	2	209.68	209.69	PSS1/EM1E	SLOPE	II C 2, III A 3	WETLAND	45	45					0.01					
2	A	2	209.69	209.70	PSS1/FO4B	FLAT - ORGANIC	I A 3, II C 2	WETLAND	74	74					0.01					
2	A	2	209.70	209.73	PSS1E	DEPRESSIONAL	II C 2	WETLAND	129	129					0.02					
2	A	2	209.73	209.74	PSS1/FO4B	FLAT - ORGANIC	I A 3, II C 2	WETLAND	85	85					0.02					
2	A	2	209.74	209.76	PSS1E	DEPRESSIONAL	II C 2	WETLAND	81	81					0.02					
2	A	2	209.76	209.77	PSS1/FO4B	FLAT - ORGANIC	I A 3, II C 2	WETLAND	69	69					0.01					
2	A	2	209.77	209.79	PSS1E	DEPRESSIONAL	II C 2	WETLAND	98	98					0.02					
2	A	2	209.79	209.86	PSS1/FO4B	FLAT - ORGANIC	I A 3, II C 2	WETLAND	380	380					0.07					
2	A	2	209.86	209.94	PEM1C	DEPRESSIONAL	II C 1	WETLAND	385	385					0.07					
2	A	2	209.94	210.00	U	N/A	I A 2, II B 2	UPLAND	337		337				0.06					
2	A	2	210.00	210.20	PSS1/FO4B	FLAT - ORGANIC	I A 3, II C 2	WETLAND	1070	1070					0.20					
2	A	2	210.20	210.22	D	N/A	NONE	DISTURBED	72			72			0.01					
2	A	2	210.22	210.22	PSS1/FO4B	FLAT - ORGANIC	I A 2, II C 2	WETLAND	25	25					0.00					
2	A	2	210.22	210.23	U	N/A	I A 3, II B 2	UPLAND	52		52				0.01					
2	A	2	210.23	210.30	PSS1/FO4B	FLAT - ORGANIC	I A 2, II C 2	WETLAND	363	363					0.07					
2	A	2	210.30	210.34	PSS1/4B	SLOPE	II B 2, I A 3	WETLAND	234	234					0.04					
2	A	2	210.34	210.37	PEM1/SS1E	DEPRESSIONAL	III A 2, II C 2	WETLAND	138	138					0.03					
2	A	2	210.37	210.44	PSS1C	FLAT - ORGANIC	II C 2	WETLAND	393	393					0.07					
2	A	2	210.44	210.48	PSS1C	SLOPE	II C 2	WETLAND	199	199					0.04					
2	A	2	210.48	210.51	PSS1/FO4B	FLAT - ORGANIC	I A 2, II C 2	WETLAND	136	136					0.03					
2	A	2	210.51	210.59	PSS1C	SLOPE	II C 2	WETLAND	442	442					0.08					
2	A	2	210.59	210.69	PSS1B	FLAT - ORGANIC	II C 2	WETLAND	501	501					0.09					
2	A	WB-W	210.69	210.69	PSS1B	FLAT - ORGANIC	II C 2	WETLAND	13	13										0.00
2	A	WB-W	210.69	210.69	PEM1/SS1E	RIVERINE	III A 3, II C 2	WETLAND	22	22										0.00
2	A	WB-W	210.69	210.70	U	N/A	I A 2, II C 2	UPLAND	54		54									0.01
2	A	2	210.70	210.82	U	N/A	I A 2, II C 2	UPLAND	611		611				0.12					
2	A	2	210.82	210.96	U	N/A	I A 3, II C 2	UPLAND	760		760				0.14					
2	A	5A	210.96	210.99	U	N/A	I A 3, II C 2	UPLAND	119		119							0.02		
2	A	5A	210.99	211.00	PEM1/SS1E	RIVERINE	III A 3, II C 2	WETLAND	84	84								0.02		
2	A	5A	211.00	211.03	U	N/A	I A 2, II C 2	UPLAND	137		137							0.03		
2	A	5A	211.03	211.03	PSS1/FO4B	SLOPE	I A 3, II B 2	WETLAND	23	23								0.00		

SPREAD	SECTION	ROW MODE	FROM MP	TO MP	NWI CODE	HGM CLASS	VIERECK	DESCRIPTION	LINEAR FEET	WETLAND FEET	UPLAND FEET	DISTURBED FEET	Comments	Mode 1 - Ice Workpad (miles)	Mode 2 - Frost Pack (miles)	Mode 3 - Timber Mats	Mode 4 - Granular Workpad	Mode 5A - Grade	Mode 5B - Mountain Grade	Stream & Flood Plain Crossings
2	A	5A	211.03	211.03	U	N/A	I A 2, II C 2	UPLAND	5		5							0.00		
2	A	WB-W	211.03	211.04	U	N/A	I A 2, II C 2	UPLAND	23		23									
2	A	WB-W	211.04	211.04	R3UBH	RIVERINE	NONE	WETLAND	31	31										0.00
2	A	WB-W	211.04	211.06	R3USC	RIVERINE	NONE	WETLAND	71	71										0.01
2	A	WB-W	211.06	211.08	R3UBH	RIVERINE	NONE	WETLAND	134	134										0.01
2	A	WB-W	211.08	211.11	R3USC	RIVERINE	NONE	WETLAND	136	136										0.03
2	A	WB-W	211.11	211.14	R3UBH	RIVERINE	NONE	WETLAND	166	166										0.03
2	A	WB-W	211.14	211.15	R3USC	RIVERINE	NONE	WETLAND	41	41										0.03
2	A	WB-W	211.15	211.16	R3UBH	RIVERINE	NONE	WETLAND	65	65										0.01
2	A	WB-W	211.16	211.21	R3USC	RIVERINE	NONE	WETLAND	273	273										0.01
2	A	WB-W	211.21	211.23	PSS1C	RIVERINE	II C 2	WETLAND	73	73										0.05
2	A	WB-W	211.23	211.24	R3USC	RIVERINE	NONE	WETLAND	100	100										0.01
2	A	WB-W	211.24	211.26	PSS1C	RIVERINE	II C 2	WETLAND	101	101										0.02
2	A	WB-W	211.26	211.27	PSS1C	RIVERINE	II B 2, II C 2	WETLAND	54	54										0.02
2	A	WB-W	211.27	211.36	R4SB	RIVERINE	NONE	WETLAND	432	432										0.01
2	A	WB-W	211.36	211.39	PSS1C	RIVERINE	II B 2, II C 2	WETLAND	166	166										0.08
2	A	WB-W	211.39	211.42	R4SB	RIVERINE	NONE	WETLAND	201	201										0.03
2	A	WB-W	211.42	211.44	PSS1/EM1B	FLAT - ORGANIC	II C 2, III A 2	WETLAND	63	63										0.04
2	A	4	211.44	211.48	PSS1/EM1B	FLAT - ORGANIC	II C 2, III A 2	WETLAND	246	246										0.01
2	A	4	211.48	211.49	PSS1/EM1C	DEPRESSIONAL	II C 2, III A 2	WETLAND	15	15							0.05			
2	A	4	211.49	211.51	U	N/A	I A 3, II C 2	UPLAND	133		133						0.00			
2	A	4	211.51	211.55	PSS1/EM1B	FLAT - ORGANIC	II C 2, III A 2	WETLAND	212	212							0.03			
2	A	4	211.55	211.59	U	N/A	I A 3, II C 2	UPLAND	204		204						0.04			
2	A	4	211.59	211.64	PSS1/EM1B	FLAT - ORGANIC	II C 2, III A 2	WETLAND	254	254							0.04			
2	A	4	211.64	211.68	U	N/A	I A 3, II C 2	UPLAND	233		233						0.05			
2	A	4	211.68	211.71	PSS1/EM1B	FLAT - ORGANIC	II C 2, III A 2	WETLAND	120	120							0.04			
2	A	4	211.71	211.73	PSS1/EM1B	SLOPE	II C 2, III A 2	WETLAND	144	144							0.02			
2	A	4	211.73	211.74	U	N/A	II C 2, I A 3	UPLAND	36		36						0.03			
2	A	4	211.74	211.80	PSS1/EM1B	FLAT - ORGANIC	II C 2, III A 2	WETLAND	297	297							0.01			
2	A	4	211.80	211.81	PSS1/EM1B	SLOPE	II C 2, III A 2	WETLAND	60	60							0.06			
2	A	4	211.81	211.90	PSS1/EM1B	FLAT - ORGANIC	II C 2, III A 2	WETLAND	504	504							0.01			
2	A	4	211.90	212.09	PSS1/EM1B	SLOPE	II C 2, III A 2	WETLAND	1004	1004							0.10			
2	A	4	212.09	212.10	U	N/A	I A 3, II C 2	UPLAND	20		20						0.19			
2	A	4	212.10	212.12	PSS1/EM1B	SLOPE	II C 2, III A 2	WETLAND	132	132							0.00			
2	A	4	212.12	212.14	U	N/A	I A 3, II C 2	UPLAND	108		108						0.03			
2	A	4	212.14	212.17	PSS1/EM1B	SLOPE	II C 2, III A 2	WETLAND	126	126							0.02			
2	A	4	212.17	212.17	U	N/A	II C 2, I A 3	UPLAND	34		34						0.02			
2	A	4	212.17	212.18	PSS1/EM1B	SLOPE	II C 2, III A 2	WETLAND	53	53							0.01			
2	A	4	212.18	212.19	U	N/A	II C 2, I A 3	UPLAND	21		21						0.01			
2	A	4	212.19	212.19	PSS1/EM1B	SLOPE	II C 2, III A 2	WETLAND	41	41							0.00			
2	A	4	212.19	212.20	U	N/A	I A 3, II C 2	UPLAND	48		48						0.01			
2	A	4	212.20	212.21	PSS1/EM1B	SLOPE	II C 2, III A 2	WETLAND	49	49							0.01			
2	A	4	212.21	212.24	U	N/A	I A 3, II C 2	UPLAND	155		155						0.01			
2	A	4	212.24	212.25	PSS1/EM1B	SLOPE	II C 2, III A 2	WETLAND	20	20							0.03			
2	A	4	212.25	212.29	U	N/A	I A 3, II C 2	UPLAND	212		212						0.00			
2	A	4	212.29	212.32	PSS1/EM1B	SLOPE	II C 2, III A 2	WETLAND	187	187							0.04			
2	A	4	212.32	212.33	U	N/A	I A 3, II C 2	UPLAND	38		38						0.04			
2	A	4	212.33	212.35	PSS1/EM1B	SLOPE	II C 2, III A 2	WETLAND	99	99							0.01			
2	A	4	212.35	212.35	U	N/A	I A 3, II C 2	UPLAND	29		29						0.02			
2	A	4	212.35	212.38	PSS1/EM1B	SLOPE	II C 2, III A 2	WETLAND	159	159							0.01			
2	A	4	212.38	212.40	U	N/A	I A 3, II C 2	UPLAND	76		76						0.03			
2	A	4	212.40	212.41	PSS1/EM1B	SLOPE	II C 2, III A 2	WETLAND	47	47							0.01			
2	A	4	212.41	212.42	U	N/A	I A 3, II C 2	UPLAND	68		68						0.01			
2	A	4	212.42	212.46	PSS1/EM1B	SLOPE	II C 2, III A 2	WETLAND	217	217							0.01			
2	A	4	212.46	212.48	U	N/A	I A 3, II C 2	UPLAND	99		99						0.04			
2	A	4	212.48	212.49	PSS1/EM1B	SLOPE	II C 2, III A 2	WETLAND	58	58							0.02			
2	A	4	212.49	212.51	U	N/A	I A 3, II C 2	UPLAND	81		81						0.01			
2	A	4	212.51	212.53	PSS1/EM1B	SLOPE	II C 2, III A 2	WETLAND	128	128							0.02			
2	A	4	212.53	212.81	PEM1B	SLOPE	III A 2	WETLAND	1507	1507							0.02			
2	A	4	212.81	212.82	PSS1/4B	SLOPE	II C 2, II A 3	WETLAND	31	31							0.29			
2	A	4	212.82	212.83	PEM1B	SLOPE	III A 2	WETLAND	65	65							0.01			
2	A	4	212.83	212.84	PSS1/4B	SLOPE	II C 2, II A 3	WETLAND	25	25							0.01			
2	A	4	212.84	212.84	PEM1B	SLOPE	III A 2	WETLAND	32	32							0.00			
2	A	4	212.84	212.85	PSS1/4B	SLOPE	II C 2, II A 2	WETLAND	44	44							0.01			
2	A	4	212.85	212.85	U	N/A	II B 2	UPLAND	3		3						0.01			
2	A	4	212.85	212.85	PEM1B	SLOPE	III A 2	WETLAND	1	1							0.00			
2	A	4	212.85	212.86	U	N/A	II B 2	UPLAND	58		58						0.00			
2	A	4	212.86	212.89	PEM1/SS1B	SLOPE	III A 2, II B 2	WETLAND	138	138							0.01			
2	A	4	212.89	212.93	PEM1E	SLOPE	III A 3	WETLAND	195	195							0.03			
2	A	4	212.93	213.19	PSS1/4B	FLAT - ORGANIC	II C 2, II A 3	WETLAND	1416	1416							0.04			
2	A	4	213.19	213.24	U	N/A	I A 3, II C 2	UPLAND	240		240						0.27			
2	A	4	213.24	213.25	PSS1/4B	SLOPE	II C 2, II A 3	WETLAND	40	40							0.05			
																	0.01			

SPREAD	SECTION	ROW MODE	FROM MP	TO MP	NWI CODE	HGM CLASS	VIERECK	DESCRIPTION	LINEAR FEET	WETLAND FEET	UPLAND FEET	DISTURBED FEET	Comments	Mode 1 - Ice Workpad (miles)	Mode 2 - Frost Pack (miles)	Mode 3 - Timber Mats	Mode 4 - Granular Workpad	Mode 5A - Grade	Mode 5B - Mountain Grade	Stream & Flood Plain Crossings
2	A	4	213.25	213.30	U	N/A	I A 3, II C 2	UPLAND	270		270						0.05			
2	A	4	213.30	213.31	PSS1/4B	SLOPE	II C 2, II A 3	WETLAND	66	66							0.01			
2	A	WB-W	213.31	213.31	PSS1/4B	SLOPE	II C 2, II A 3	WETLAND	8	8										0.00
2	A	WB-W	213.31	213.32	R4SBC	RIVERINE	II C 2	WETLAND	23	23										0.00
2	A	WB-W	213.32	213.32	U	N/A	I A 3, II C 2	UPLAND	29		29									0.01
2	A	4	213.32	213.33	U	N/A	I A 3, II C 2	UPLAND	22		22						0.00			
2	A	4	213.33	213.62	PSS1/4B	FLAT - ORGANIC	II C 2, II A 3	WETLAND	1559	1559							0.30			
2	A	4	213.62	213.64	PSS1/EM1B	FLAT - ORGANIC	II C 2, III A 2	WETLAND	94	94							0.02			
2	A	4	213.64	213.65	PSS1/4B	FLAT - ORGANIC	II C 2, II A 3	WETLAND	38	38							0.01			
2	A	4	213.65	213.78	PSS1/EM1B	FLAT - ORGANIC	II C 2, III A 2	WETLAND	681	681							0.13			
2	A	4	213.78	213.81	PSS1/4B	FLAT - ORGANIC	II C 2, II A 3	WETLAND	177	177							0.03			
2	A	4	213.81	214.58	PSS1/EM1B	FLAT - ORGANIC	II C 2, III A 2	WETLAND	4079	4079							0.77			
2	A	4	214.58	214.60	U	N/A	II B 2, II A 3	UPLAND	67		67						0.01			
2	A	4	214.60	214.60	PSS1/EM1B	FLAT - ORGANIC	II C 2, III A 2	WETLAND	32	32							0.01			
2	A	WB-W	214.60	214.60	PSS1/EM1B	FLAT - ORGANIC	II C 2, III A 2	WETLAND	8	8										0.00
2	A	WB-W	214.60	214.61	PSS1A	RIVERINE	II B 2, I A 3	WETLAND	39	39										0.01
2	A	WB-W	214.61	214.61	U	N/A	II B 2, II A 3	UPLAND	13		13									0.00
2	A	4	214.61	214.62	U	N/A	II B 2, II A 3	UPLAND	53		53						0.01			
2	A	4	214.62	214.72	PSS1/EM1B	FLAT - ORGANIC	II C 2, III A 2	WETLAND	516	516							0.10			
2	A	4	214.72	214.73	PSS1/EM1C	SLOPE	II C 2, III A 2	WETLAND	46	46							0.01			
2	A	4	214.73	214.90	PSS1/EM1B	FLAT - ORGANIC	II C 2, III A 2	WETLAND	897	897							0.17			
2	A	4	214.90	214.92	PSS1B	FLAT - ORGANIC	II C 2	WETLAND	111	111							0.02			
2	A	4	214.92	215.43	U	N/A	II A 3, II C 2	UPLAND	2682		2682						0.51			
2	A	4	215.43	215.47	PSS1B	FLAT - ORGANIC	II C 2	WETLAND	229	229							0.04			
2	A	4	215.47	215.48	U	N/A	II A 3, II C 2	UPLAND	70		70						0.01			
2	A	4	215.48	215.78	PSS1B	FLAT - ORGANIC	II C 2	WETLAND	1553	1553							0.29			
2	A	4	215.78	215.80	PSS1/4B	FLAT - ORGANIC	II B 2, II A 3	WETLAND	116	116							0.02			
2	A	4	215.80	216.07	PSS1B	FLAT - ORGANIC	II C 2	WETLAND	1418	1418							0.27			
2	A	4	216.07	216.07	PSS1/4B	FLAT - ORGANIC	II B 2, II A 3	WETLAND	8	8							0.00			
2	A	4	216.07	216.93	PSS1B	FLAT - ORGANIC	II C 2	WETLAND	4558	4558							0.86			
2	A	4	216.93	217.22	PSS1/4B	FLAT - ORGANIC	II B 2, II A 3	WETLAND	1519	1519							0.29			
2	A	4	217.22	217.24	PSS1/EM1B	FLAT - ORGANIC	II C 2, III A 2	WETLAND	122	122							0.02			
2	A	4	217.24	217.72	PSS1/4B	FLAT - ORGANIC	II B 2, II A 3	WETLAND	2486	2486							0.47			
2	A	4	217.72	217.73	PSS1/EM1B	FLAT - ORGANIC	II C 2, III A 2	WETLAND	62	62							0.01			
2	A	4	217.73	217.76	PSS1/4B	FLAT - ORGANIC	II B 2, II A 3	WETLAND	164	164							0.03			
2	A	4	217.76	217.77	PSS1/EM1B	FLAT - ORGANIC	II C 2, III A 2	WETLAND	69	69							0.01			
2	A	4	217.77	217.78	PSS1/4B	FLAT - ORGANIC	II B 2, II A 3	WETLAND	60	60							0.01			
2	A	4	217.78	217.92	U	N/A	I A 2	UPLAND	745		745						0.14			
2	A	4	217.92	217.93	PSS1/4B	FLAT - ORGANIC	II B 2, II A 3	WETLAND	51	51							0.01			
2	A	4	217.93	218.35	U	N/A	I A 2	UPLAND	2176		2176						0.41			
2	A	4	218.35	218.36	PSS1/4B	FLAT - ORGANIC	II A 3, II C 2	WETLAND	66	66							0.01			
2	A	4	218.36	218.39	PSS1B	FLAT - ORGANIC	II C 2	WETLAND	174	174							0.03			
2	A	4	218.39	218.41	U	N/A	I A 2	UPLAND	103		103						0.02			
2	A	4	218.41	218.46	PSS1B	DEPRESSIONAL	II C 2	WETLAND	255	255							0.05			
2	A	4	218.46	218.47	U	N/A	I A 2	UPLAND	63		63						0.01			
2	A	4	218.47	218.47	D	N/A	NONE	DISTURBED	15			15					0.00			
2	A	4	218.47	218.49	U	N/A	I A 3, II C 2	UPLAND	95		95						0.02			
2	A	4	218.49	218.49	PEM1/SS1C	RIVERINE	III A 3, II B 2	WETLAND	12	12							0.00			
2	A	4	218.49	218.53	U	N/A	I A 3, II C 2	UPLAND	176		176						0.03			
2	A	WB-W	218.53	218.53	U	N/A	I A 3, II C 2	UPLAND	18		18									0.00
2	A	WB-W	218.53	218.53	R3USC	RIVERINE	NONE	WETLAND	12	12										0.00
2	A	WB-W	218.53	218.54	R3UBH	RIVERINE	NONE	WETLAND	54	54										0.01
2	A	WB-W	218.54	218.54	PEM1C	RIVERINE	III A 3	WETLAND	5	5										0.00
2	A	5A	218.54	218.57	PEM1C	RIVERINE	III A 3	WETLAND	146	146								0.03		
2	A	5A	218.57	218.60	U	N/A	I A 3, II B 2	UPLAND	138		138							0.03		
2	A	5A	218.60	218.62	PSS4/1B	FLAT - ORGANIC	II A 2, II C 2	WETLAND	138	138								0.03		
2	A	5A	218.62	218.64	U	N/A	I A 2	UPLAND	106		106							0.02		
2	A	5A	218.64	218.65	PSS4/1B	FLAT - ORGANIC	II A 2, II C 2	WETLAND	51	51								0.01		
2	A	5A	218.65	218.79	U	N/A	I A 2	UPLAND	700		700							0.13		
2	A	5A	218.79	218.79	D	N/A	NONE	DISTURBED	33			33						0.01		
2	A	5A	218.79	219.05	U	N/A	I A 2	UPLAND	1340		1340							0.25		
2	A	5A	219.05	219.06	PSS1C	RIVERINE	II C 2	WETLAND	61	61								0.01		
2	A	5A	219.06	219.06	R3USC	RIVERINE	NONE	WETLAND	16	16								0.00		
2	A	WB-W	219.06	219.07	R3USC	RIVERINE	NONE	WETLAND	57	57										0.01
2	A	WB-W	219.07	219.08	R3UBH	RIVERINE	NONE	WETLAND	25	25										0.00
2	A	WB-W	219.08	219.08	R3USC	RIVERINE	NONE	WETLAND	17	17										0.00
2	A	WB-W	219.08	219.08	U	N/A	I A 2	UPLAND	21		21									0.00
2	A	5A	219.08	219.20	U	N/A	I A 2	UPLAND	613		613							0.12		
2	A	5A	219.20	219.20	D	N/A	NONE	DISTURBED	25			25						0.00		
2	A	5A	219.20	219.47	U	N/A	I A 3, II C 2	UPLAND	1417		1417							0.27		
2	A	5A	219.47	219.48	PSS1/4B	FLAT - ORGANIC	II C 2, II A 3	WETLAND	45	45								0.01		
2	A	4	219.48	219.49	PSS1/4B	FLAT - ORGANIC	II C 2, II A 3	WETLAND	50	50							0.01			

SPREAD	SECTION	ROW MODE	FROM MP	TO MP	NWI CODE	HGM CLASS	VIERECK	DESCRIPTION	LINEAR FEET	WETLAND FEET	UPLAND FEET	DISTURBED FEET	Comments	Mode 1 - Ice Workpad (miles)	Mode 2 - Frost Pack (miles)	Mode 3 - Timber Mats	Mode 4 - Granular Workpad	Mode 5A - Grade	Mode 5B - Mountain Grade	Stream & Flood Plain Crossings
2	A	4	219.49	219.53	PSS1B	FLAT - ORGANIC	II C 2	WETLAND	217	217							0.04			
2	A	4	219.53	219.54	U	N/A	II C 2	UPLAND	38		38						0.01			
2	A	4	219.54	219.54	PSS1C	RIVERINE	II C 2	WETLAND	25	25							0.00			
2	A	WB-W	219.54	219.55	PSS1C	RIVERINE	II C 2	WETLAND	21	21										0.00
2	A	WB-W	219.55	219.56	U	N/A	II C 2	UPLAND	39		39									0.01
2	A	4	219.56	219.56	U	N/A	II C 2	UPLAND	37		37						0.01			
2	A	4	219.56	219.57	PEM1/SS1B	FLAT - ORGANIC	III A 2, II D 2	WETLAND	48	48							0.01			
2	A	4	219.57	219.58	U	N/A	II C 2	UPLAND	44		44						0.01			
2	A	4	219.58	219.63	PEM1/SS1B	FLAT - ORGANIC	III A 2, II D 2	WETLAND	287	287							0.05			
2	A	4	219.63	219.64	PEM1/SS1B	SLOPE	III A 2, II D 2	WETLAND	28	28							0.01			
2	A	4	219.64	219.66	PEM1/SS1B	FLAT - ORGANIC	III A 2, II D 2	WETLAND	102	102							0.02			
2	A	4	219.66	219.68	U	N/A	I A 3, II C 2	UPLAND	134		134						0.03			
2	A	4	219.68	219.69	PEM1/SS4B	SLOPE	III A 2, II D 2	WETLAND	32	32							0.01			
2	A	4	219.69	219.69	U	N/A	I A 3, II C 2	UPLAND	0		0						0.00			
2	A	4	219.69	219.70	PEM1/SS4B	SLOPE	III A 2, II D 2	WETLAND	47	47							0.01			
2	A	4	219.70	219.72	U	N/A	I A 3, II C 2	UPLAND	127		127						0.02			
2	A	4	219.72	219.76	PEM1/SS4B	SLOPE	III A 2, II D 2	WETLAND	174	174							0.03			
2	A	4	219.76	219.80	PEM1/SS4B	FLAT - MINERAL	II A 3, III A 2, II D 2	WETLAND	245	245							0.05			
2	A	4	219.80	219.82	U	N/A	I A 3, II B 2	UPLAND	105		105						0.02			
2	A	WB-W	219.82	219.83	U	N/A	I A 3, II B 2	UPLAND	40		40									0.01
2	A	WB-W	219.83	219.84	PSS1A	RIVERINE	II C 2	WETLAND	66	66										0.01
2	A	WB-W	219.84	219.86	R3USC	RIVERINE	NONE	WETLAND	79	79										0.01
2	A	WB-W	219.86	219.86	R3UBH	RIVERINE	NONE	WETLAND	8	8										0.00
2	A	WB-W	219.86	219.87	R3USC	RIVERINE	NONE	WETLAND	43	43										0.01
2	A	WB-W	219.87	219.88	PSS1C	RIVERINE	II C 2	WETLAND	47	47										0.01
2	A	WB-W	219.88	219.89	R3USC	RIVERINE	NONE	WETLAND	78	78										0.01
2	A	WB-W	219.89	219.90	U	N/A	I A 3, II B 2	UPLAND	31		31									0.01
2	A	WB-W	219.90	219.91	PSS1/EM1B	FLAT - ORGANIC	II C 2, III A 2	WETLAND	59	59										0.01
2	A	4	219.91	220.14	PSS1/EM1B	FLAT - ORGANIC	II C 2, III A 2	WETLAND	1205	1205							0.23			
2	A	4	220.14	220.14	PEM1/SS1C	RIVERINE	III A 3, II C 2	WETLAND	25	25							0.00			
2	A	WB-W	220.14	220.15	PEM1/SS1C	RIVERINE	III A 3, II C 2	WETLAND	60	60										0.01
2	A	4	220.15	220.15	PEM1/SS1C	RIVERINE	III A 3, II C 2	WETLAND	6	6							0.00			
2	A	4	220.15	220.31	PSS1/EM1B	FLAT - ORGANIC	II C 2, III A 2	WETLAND	814	814							0.15			
2	A	4	220.31	220.32	PSS1/FO4B	FLAT - ORGANIC	I A 3, II B 2	WETLAND	77	77							0.01			
2	A	4	220.32	220.32	PEM1/SS1C	SLOPE	III A 3, II C 2	WETLAND	1	1							0.00			
2	A	4	220.32	220.33	PSS1/FO4B	FLAT - ORGANIC	I A 3, II B 2	WETLAND	41	41							0.01			
2	A	4	220.33	220.34	PEM1/SS1C	SLOPE	III A 3, II C 2	WETLAND	31	31							0.01			
2	A	4	220.34	220.38	PSS1/FO4B	FLAT - ORGANIC	I A 3, II B 2	WETLAND	210	210							0.04			
2	A	4	220.38	220.40	PEM1/SS1C	SLOPE	III A 3, II C 2	WETLAND	140	140							0.03			
2	A	4	220.40	220.59	PSS1/EM1B	FLAT - ORGANIC	II C 2, III A 2	WETLAND	974	974							0.18			
2	A	4	220.59	220.62	PSS1/EM1C	SLOPE	II C 2, III A 2	WETLAND	179	179							0.03			
2	A	4	220.62	220.67	PSS1/EM1B	FLAT - ORGANIC	II C 2, III A 2	WETLAND	263	263							0.05			
2	A	4	220.67	220.68	U	N/A	II A 3, II C 2	UPLAND	78		78						0.01			
2	A	4	220.68	220.70	PSS1/EM1B	FLAT - ORGANIC	II C 2, III A 2	WETLAND	90	90							0.02			
2	A	4	220.70	220.71	PSS1/EM1C	SLOPE	II C 2, III A 2	WETLAND	69	69							0.01			
2	A	4	220.71	220.74	U	N/A	II C 2	UPLAND	131		131						0.02			
2	A	4	220.74	221.00	PSS1/EM1B	FLAT - ORGANIC	II C 2, III A 2	WETLAND	1387	1387							0.26			
2	A	4	221.00	221.07	U	N/A	II A 2, II C 2	UPLAND	342		342						0.06			
2	A	4	221.07	221.09	PSS1/EM1B	FLAT - ORGANIC	II C 2, III A 2	WETLAND	137	137							0.03			
2	A	4	221.09	221.11	PSS1/4B	FLAT - ORGANIC	II A 3, II C 2	WETLAND	104	104							0.02			
2	A	4	221.11	221.13	U	N/A	I A 2, II C 2	UPLAND	88		88						0.02			
2	A	WB-W	221.13	221.13	U	N/A	I A 2, II C 2	UPLAND	9		9									0.00
2	A	WB-W	221.13	221.14	R3UBH	RIVERINE	NONE	WETLAND	33	33										0.01
2	A	WB-W	221.14	221.14	U	N/A	I A 3, II A 3	UPLAND	19		19									0.00
2	A	4	221.14	221.21	U	N/A	I A 3, II A 3	UPLAND	352		352						0.07			
2	A	4	221.21	221.22	PSS1/4B	DEPRESSIONAL	II A 3, III A 2	WETLAND	70	70							0.01			
2	A	4	221.22	221.44	U	N/A	I A 3, II A 3	UPLAND	1154		1154						0.22			
2	A	4	221.44	221.49	PSS1/EM1B	FLAT - ORGANIC	II C 2, III A 2	WETLAND	274	274							0.05			
2	A	4	221.49	221.50	PSS1/EM1B	SLOPE	II C 2, III A 2	WETLAND	66	66							0.01			
2	A	4	221.50	221.54	PSS1/EM1B	FLAT - ORGANIC	II C 2, III A 2	WETLAND	167	167							0.03			
2	A	4	221.54	221.56	U	N/A	I A 3, II C 2	UPLAND	118		118						0.02			
2	A	4	221.56	221.66	PSS1/EM1B	FLAT - ORGANIC	II C 2, III A 2	WETLAND	550	550							0.10			
2	A	4	221.66	221.71	U	N/A	I A 3, II C 2	UPLAND	262		262						0.05			
2	A	4	221.71	221.72	PSS1/EM1B	FLAT - ORGANIC	II C 2, III A 2	WETLAND	41	41							0.01			
2	A	4	221.72	221.92	U	N/A	I A 3, II C 2	UPLAND	1049		1049						0.20			
2	A	4	221.92	221.95	PSS1/EM1B	FLAT - ORGANIC	II C 2, III A 2	WETLAND	165	165							0.03			
2	A	4	221.95	221.97	U	N/A	I A 3, II C 2	UPLAND	86		86						0.02			
2	A	4	221.97	222.14	PSS1/EM1B	FLAT - ORGANIC	II C 2, III A 2	WETLAND	939	939							0.18			
2	A	4	222.14	222.17	PSS1/EM1C	SLOPE	II C 2, III A 2	WETLAND	165	165							0.03			
2	A	4	222.17	222.27	PSS1/EM1B	FLAT - ORGANIC	II C 2, III A 2	WETLAND	500	500							0.09			
2	A	4	222.27	222.29	PSS1/EM1C	SLOPE	II C 2, III A 2	WETLAND	112	112							0.02			
2	A	4	222.29	222.30	PSS1/EM1B	FLAT - ORGANIC	II C 2, III A 2	WETLAND	77	77							0.01			

SPREAD	SECTION	ROW MODE	FROM MP	TO MP	NWI CODE	HGM CLASS	VIERECK	DESCRIPTION	LINEAR FEET	WETLAND FEET	UPLAND FEET	DISTURBED FEET	Comments	Mode 1 - Ice Workpad (miles)	Mode 2 - Frost Pack (miles)	Mode 3 - Timber Mats	Mode 4 - Granular Workpad	Mode 5A - Grade	Mode 5B - Mountain Grade	Stream & Flood Plain Crossings
2	A	4	222.30	222.36	U	N/A	II A 3, II C 2	UPLAND	286		286						0.05			
2	A	4	222.36	222.36	PEM1/SS1C	SLOPE	III A 2, II C 2	WETLAND	20	20							0.00			
2	A	4	222.36	222.39	U	N/A	I A 2, II C 2	UPLAND	129		129						0.02			
2	A	4	222.39	222.39	PSS1/EM1B	FLAT - ORGANIC	II C 2, III A 2	WETLAND	10	10							0.00			
2	A	4	222.39	222.41	PEM1/SS1C	SLOPE	III A 2, II C 2	WETLAND	110	110							0.02			
2	A	4	222.41	222.59	PSS1/EM1B	FLAT - ORGANIC	II C 2, III A 2	WETLAND	934	934							0.18			
2	A	4	222.59	222.62	PEM1/SS1C	FLAT - ORGANIC	III A 2, II C 2	WETLAND	166	166							0.03			
2	A	4	222.62	223.21	PSS1/EM1B	FLAT - ORGANIC	II C 2, III A 2	WETLAND	3148	3148							0.60			
2	A	4	223.21	223.22	PSS1/EM1E	RIVERINE	II C 2, III A 3	WETLAND	30	30							0.01			
2	A	4	223.22	223.24	PSS1/EM1B	FLAT - ORGANIC	II C 2, III A 2	WETLAND	79	79							0.01			
2	A	4	223.24	223.24	PSS1/EM1E	RIVERINE	II C 2, III A 3	WETLAND	11	11							0.00			
2	A	WB-W	223.24	223.25	PSS1/EM1E	RIVERINE	II C 2, III A 3	WETLAND	55	55										0.01
2	A	WB-W	223.25	223.25	PSS1/EM1B	FLAT - ORGANIC	II C 2, III A 2	WETLAND	5	5										0.00
2	A	4	223.25	223.49	PSS1/EM1B	FLAT - ORGANIC	II C 2, III A 2	WETLAND	1283	1283							0.24			
2	A	4	223.49	223.53	PSS1/4B	FLAT - ORGANIC	II C 2, II A 3	WETLAND	194	194							0.04			
2	A	4	223.53	223.57	PSS1/EM1B	FLAT - ORGANIC	II C 2, III A 2	WETLAND	220	220							0.04			
2	A	4	223.57	223.58	U	N/A	I A 3, II B 2	UPLAND	43		43						0.01			
2	A	WB-W	223.58	223.59	U	N/A	I A 3, II B 2	UPLAND	52		52									0.01
2	A	WB-W	223.59	223.59	PSS1/EM1B	FLAT - ORGANIC	II C 2, III A 2	WETLAND	8	8										0.00
2	A	4	223.59	223.93	PSS1/EM1B	FLAT - ORGANIC	II C 2, III A 2	WETLAND	1774	1774							0.34			
2	A	4	223.93	223.94	U	N/A	I C 3, II C 2	UPLAND	68		68						0.01			
2	A	4	223.94	224.14	PSS1/EM1B	FLAT - ORGANIC	II C 2, III A 2	WETLAND	1063	1063							0.20			
2	A	4	224.14	224.41	PSS1/4B	FLAT - ORGANIC	II C 2, II A 3	WETLAND	1442	1442							0.27			
2	A	4	224.41	224.47	PSS1/EM1B	FLAT - ORGANIC	II C 2, III A 2	WETLAND	312	312							0.06			
2	A	4	224.47	224.49	PSS1/4B	FLAT - ORGANIC	II C 2, II A 3	WETLAND	94	94							0.02			
2	A	4	224.49	224.83	PSS1/EM1B	FLAT - ORGANIC	II C 2, III A 2	WETLAND	1814	1814							0.34			
2	A	4	224.83	224.84	PSS1/4B	FLAT - ORGANIC	II A 3, II C 2	WETLAND	36	36							0.01			
2	A	4	224.84	224.85	U	N/A	I C 3, II C 2	UPLAND	56		56						0.01			
2	A	WB-W	224.85	224.85	U	N/A	I C 3, II C 2	UPLAND	1		1									0.00
2	A	WB-W	224.85	224.85	PSS1/4B	FLAT - ORGANIC	II A 3, II C 2	WETLAND	21	21										0.00
2	A	WB-W	224.85	224.86	U	N/A	I A 3, II C 2	UPLAND	38		38									0.01
2	A	4	224.86	224.97	U	N/A	I A 3, II C 2	UPLAND	570		570						0.11			
2	A	WB-W	224.97	224.97	U	N/A	I A 3, II C 2	UPLAND	12		12									0.00
2	A	WB-W	224.97	224.98	PSS1B	FLAT - ORGANIC	II C 2	WETLAND	48	48										0.01
2	A	4	224.98	225.48	PSS1B	FLAT - ORGANIC	II C 2	WETLAND	2652	2652							0.50			
2	A	4	225.48	225.58	PSS1/4B	FLAT - ORGANIC	II A 3, II C 2	WETLAND	509	509							0.10			
2	A	4	225.58	225.60	U	N/A	I A 3, II C 2	UPLAND	94		94						0.02			
2	A	4	225.60	225.61	PSS1/4B	FLAT - ORGANIC	II A 3, II C 2	WETLAND	56	56							0.01			
2	A	4	225.61	225.64	PSS1B	FLAT - ORGANIC	II C 2	WETLAND	154	154							0.03			
2	A	4	225.64	225.65	PSS1/4B	FLAT - ORGANIC	II A 3, II C 2	WETLAND	74	74							0.01			
2	A	4	225.65	225.66	PSS1B	FLAT - ORGANIC	II C 2	WETLAND	52	52							0.01			
2	A	4	225.66	225.69	PSS1/4B	FLAT - ORGANIC	II A 3, II C 2	WETLAND	174	174							0.03			
2	A	4	225.69	225.76	PSS1B	FLAT - ORGANIC	II C 2	WETLAND	325	325							0.06			
2	A	4	225.76	225.79	PSS1/4B	FLAT - ORGANIC	II A 3, II C 2	WETLAND	176	176							0.03			
2	A	4	225.79	225.80	U	N/A	II A 3, II C 2	UPLAND	35		35						0.01			
2	A	4	225.80	225.80	PSS1/4B	FLAT - ORGANIC	II A 3, II C 2	WETLAND	21	21							0.00			
2	A	4	225.80	225.81	U	N/A	II A 3, II C 2	UPLAND	45		45						0.01			
2	A	4	225.81	225.82	PSS1/4B	FLAT - ORGANIC	II A 3, II C 2	WETLAND	82	82							0.02			
2	A	4	225.82	225.87	U	N/A	II A 3, II C 2	UPLAND	229		229						0.04			
2	A	WB-W	225.87	225.88	U	N/A	II A 3, II C 2	UPLAND	85		85									0.02
2	A	WB-W	225.88	225.88	U	N/A	II A 3, II C 2	UPLAND	5		5									0.00
2	A	4	225.88	225.92	U	N/A	II A 3, II C 2	UPLAND	175		175						0.03			
2	A	4	225.92	226.20	PSS1/4B	FLAT - ORGANIC	II A 3, II C 2	WETLAND	1504	1504							0.28			
2	A	4	226.20	226.24	U	N/A	II A 3, II C 2	UPLAND	181		181						0.03			
2	A	WB-W	226.24	226.25	U	N/A	II A 3, II C 2	UPLAND	47		47									0.01
2	A	WB-W	226.25	226.25	U	N/A	II A 3, II C 2	UPLAND	13		13									0.00
2	A	4	226.25	226.46	U	N/A	II A 3, II C 2	UPLAND	1120		1120						0.21			
2	A	4	226.46	226.47	PSS1F	RIVERINE	II B 2, II C 2	WETLAND	70	70							0.01			
2	A	4	226.47	226.52	U	N/A	I A 3, II D 1	UPLAND	257		257						0.05			
2	A	4	226.52	226.53	PSS1F	RIVERINE	II B 2, II C 2	WETLAND	59	59							0.01			
2	A	4	226.53	226.55	U	N/A	I A 3, II D 1	UPLAND	107		107						0.02			
2	A	4	226.55	226.57	PSS1F	RIVERINE	II B 2, II C 2	WETLAND	66	66							0.01			
2	A	4	226.57	226.58	U	N/A	II A 3, II C 2	UPLAND	55		55						0.01			
2	A	4	226.58	226.61	U	N/A	II A 3, II D 3	UPLAND	186		186						0.04			
2	A	4	226.61	226.67	U	N/A	II A 3, II C 2	UPLAND	316		316						0.06			
2	A	4	226.67	226.70	U	N/A	II A 3, II D 3	UPLAND	164		164						0.03			
2	A	4	226.70	226.73	U	N/A	II A 3, II C 2	UPLAND	139		139						0.03			
2	A	4	226.73	226.75	U	N/A	II A 3, II D 3	UPLAND	132		132						0.02			
2	A	4	226.75	226.77	U	N/A	I A 2, II C 2	UPLAND	91		91						0.02			
2	A	4	226.77	227.00	U	N/A	II A 3, II C 2	UPLAND	1198		1198						0.23			
2	A	WB-W	227.00	227.01	U	N/A	II A 3, II C 2	UPLAND	60		60									0.01
2	A	4	227.01	227.10	U	N/A	II A 3, II C 2	UPLAND	493		493						0.09			

SPREAD	SECTION	ROW MODE	FROM MP	TO MP	NWI CODE	HGM CLASS	VIERECK	DESCRIPTION	LINEAR FEET	WETLAND FEET	UPLAND FEET	DISTURBED FEET	Comments	Mode 1 - Ice Workpad (miles)	Mode 2 - Frost Pack (miles)	Mode 3 - Timber Mats	Mode 4 - Granular Workpad	Mode 5A - Grade	Mode 5B - Mountain Grade	Stream & Flood Plain Crossings
2	A	4	227.10	227.13	U	N/A	II A 3, II C 2	UPLAND	140		140						0.03			
2	A	4	227.13	227.22	U	N/A	II A 3, II B 2	UPLAND	454		454						0.09			
2	A	4	227.22	227.27	U	N/A	II A 3, II C 2	UPLAND	303		303						0.06			
2	A	4	227.27	227.29	U	N/A	II A 3, II B 2	UPLAND	110		110						0.02			
2	A	4	227.29	227.40	U	N/A	II A 3, II C 2	UPLAND	565		565						0.11			
2	A	4	227.40	227.41	U	N/A	II A 3, II C 2	UPLAND	40		40						0.01			
2	A	4	227.41	227.43	U	N/A	II A 3, II C 2	UPLAND	95		95						0.02			
2	A	4	227.43	227.45	U	N/A	II A 3, II C 2	UPLAND	148		148						0.03			
2	A	4	227.45	227.46	U	N/A	II A 3, II B 1	UPLAND	32		32						0.01			
2	A	4	227.46	227.47	U	N/A	II A 3, II C 2	UPLAND	41		41						0.01			
2	A	4	227.47	227.48	U	N/A	II B 1	UPLAND	51		51						0.01			
2	A	4	227.48	227.49	U	N/A	II A 3, II C 2	UPLAND	64		64						0.01			
2	A	4	227.49	227.50	U	N/A	II B 1	UPLAND	38		38						0.01			
2	A	4	227.50	227.52	U	N/A	II A 3, II C 2	UPLAND	103		103						0.02			
2	A	4	227.52	227.53	U	N/A	II B 1	UPLAND	95		95						0.02			
2	A	4	227.53	227.54	U	N/A	II A 3, II C 2	UPLAND	43		43						0.01			
2	A	4	227.54	227.59	PSS1/3B	FLAT - ORGANIC	II C 2	WETLAND	261	261							0.05			
2	A	4	227.59	227.63	U	N/A	II A 3, II C 2	UPLAND	185		185						0.03			
2	A	4	227.63	227.65	U	N/A	I C 3, II B 2	UPLAND	114		114						0.02			
2	A	4	227.65	227.72	U	N/A	II A 3, II C 2	UPLAND	371		371						0.07			
2	A	4	227.72	227.85	PSS1/4B	FLAT - ORGANIC	II C 2, II A 3	WETLAND	674	674							0.13			
2	A	4	227.85	227.88	PSS1/EM1B	FLAT - ORGANIC	II C 2, III A 2	WETLAND	153	153							0.03			
2	A	4	227.88	227.89	PSS1/4B	FLAT - ORGANIC	II C 2, II A 3	WETLAND	84	84							0.02			
2	A	4	227.89	228.10	PSS1/EM1B	FLAT - ORGANIC	II C 2, III A 2	WETLAND	1118	1118							0.21			
2	A	4	228.10	228.11	U	N/A	I C 3, II C 2	UPLAND	30		30						0.01			
2	A	4	228.11	228.12	D	N/A	NONE	DISTURBED	81			81					0.02			
2	A	4	228.12	228.22	PSS1/4B	FLAT - ORGANIC	II C 2, II A 3	WETLAND	515	515							0.10			
2	A	4	228.22	228.23	U	N/A	I A 2	UPLAND	39		39						0.01			
2	A	4	228.23	228.52	PSS1/4B	FLAT - ORGANIC	II C 2, II A 3	WETLAND	1539	1539							0.29			
2	A	5A	228.52	228.52	PSS1/4B	FLAT - ORGANIC	II C 2, II A 3	WETLAND	6	6								0.00		
2	A	5A	228.52	228.57	U	N/A	I A 2	UPLAND	253		253							0.05		
2	A	5A	228.57	228.58	PSS4/1B	FLAT - ORGANIC	II A 2, II C 2	WETLAND	37	37								0.01		
2	A	5A	228.58	228.58	U	N/A	I A 2	UPLAND	41		41							0.01		
2	A	5A	228.58	228.60	PSS4/1B	FLAT - ORGANIC	II A 2, II C 2	WETLAND	89	89								0.02		
2	A	5A	228.60	228.71	U	N/A	I A 2	UPLAND	582		582							0.11		
2	A	5A	228.71	228.74	PSS1/EM1B	FLAT - ORGANIC	II C 2, III A 2	WETLAND	133	133								0.03		
2	A	5A	228.74	228.78	PSS4/1B	FLAT - ORGANIC	II A 2, II C 2	WETLAND	234	234								0.04		
2	A	5A	228.78	228.79	PSS1/4B	SLOPE	II C 2, II A 3	WETLAND	36	36								0.01		
2	A	5A	228.79	228.82	U	N/A	II A 3	UPLAND	150		150							0.03		
2	A	5A	228.82	228.83	PSS1/4B	SLOPE	II C 2, II A 3	WETLAND	79	79								0.01		
2	A	5A	228.83	228.85	U	N/A	II A 3	UPLAND	84		84							0.02		
2	A	5A	228.85	228.85	D	N/A	NONE	DISTURBED	28			28						0.01		
2	B	5A	228.85	228.88	U	N/A	I A 2	UPLAND	126		126							0.02		
2	B	5A	228.88	228.89	PSS1/4B	FLAT - ORGANIC	II C 2, II A 3	WETLAND	69	69								0.01		
2	B	5A	228.89	228.89	U	N/A	I A 2	UPLAND	9		9							0.00		
2	B	5A	228.89	228.90	PSS1/4B	FLAT - ORGANIC	II C 2, II A 3	WETLAND	31	31								0.01		
2	B	5A	228.90	228.99	U	N/A	I A 2	UPLAND	511		511							0.10		
2	B	5A	228.99	229.01	PSS1/4B	FLAT - ORGANIC	II C 2, II A 3	WETLAND	81	81								0.02		
2	B	5A	229.01	229.11	U	N/A	I A 2	UPLAND	542		542							0.10		
2	B	WB-W	229.11	229.11	U	N/A	I A 2	UPLAND	3		3									0.00
2	B	WB-W	229.11	229.12	R3USC	RIVERINE	NONE	WETLAND	26	26										0.00
2	B	WB-W	229.12	229.13	R3UBH	RIVERINE	NONE	WETLAND	48	48										0.01
2	B	WB-W	229.13	229.13	U	N/A	I C 1	UPLAND	44		44									0.01
2	B	5A	229.13	229.17	U	N/A	I C 1	UPLAND	180		180							0.03		
2	B	4	229.17	229.18	U	N/A	I C 1	UPLAND	86		86						0.02			
2	B	4	229.18	229.48	U	N/A	I A 2	UPLAND	1555		1555						0.29			
2	B	4	229.48	229.49	D	N/A	NONE	DISTURBED	42			42					0.01			
2	B	4	229.49	229.55	U	N/A	I A 2, II C 2	UPLAND	326		326						0.06			
2	B	4	229.55	229.55	PSS1/4B	FLAT - ORGANIC	II A 3, II C 2	WETLAND	17	17							0.00			
2	B	4	229.55	229.57	PEM1/SS1C	DEPRESSIONAL	III A 3, II C 2	WETLAND	84	84							0.02			
2	B	4	229.57	229.57	PSS1/4B	FLAT - ORGANIC	II A 3, II C 2	WETLAND	31	31							0.01			
2	B	4	229.57	229.61	U	N/A	I A 2, II C 2	UPLAND	179		179						0.03			
2	B	4	229.61	229.64	PSS1/EM1B	DEPRESSIONAL	II C 2, III A 2	WETLAND	143	143							0.03			
2	B	4	229.64	229.65	U	N/A	I A 2, II C 2	UPLAND	66		66						0.01			
2	B	4	229.65	229.68	PSS1/4B	FLAT - ORGANIC	II A 3, II C 2	WETLAND	192	192							0.04			
2	B	4	229.68	230.04	U	N/A	I A 2, II C 2	UPLAND	1890		1890						0.36			
2	B	4	230.04	230.07	U	N/A	I C 2, II C 2	UPLAND	134		134						0.03			
2	B	4	230.07	230.08	PSS1/4B	FLAT - ORGANIC	II A 3, II C 2	WETLAND	73	73							0.01			
2	B	4	230.08	230.12	U	N/A	I C 2, II C 2	UPLAND	178		178						0.03			
2	B	4	230.12	230.13	PSS1/4B	FLAT - ORGANIC	II A 3, II C 2	WETLAND	55	55							0.01			
2	B	4	230.13	230.14	PSS1/4B	SLOPE	II A 3, II C 2	WETLAND	97	97							0.02			
2	B	4	230.14	230.17	PEM1/SS1C	SLOPE	III A 2, II C 2	WETLAND	115	115							0.02			

SPREAD	SECTION	ROW MODE	FROM MP	TO MP	NWI CODE	HGM CLASS	VIERECK	DESCRIPTION	LINEAR FEET	WETLAND FEET	UPLAND FEET	DISTURBED FEET	Comments	Mode 1 - Ice Workpad (miles)	Mode 2 - Frost Pack (miles)	Mode 3 - Timber Mats	Mode 4 - Granular Workpad	Mode 5A - Grade	Mode 5B - Mountain Grade	Stream & Flood Plain Crossings
2	B	4	230.17	230.23	PSS1/EM1B	FLAT - ORGANIC	II C 2, III A 2	WETLAND	335	335							0.06			
2	B	4	230.23	230.24	PSS1B	FLAT - ORGANIC	II B 2	WETLAND	40	40							0.01			
2	B	4	230.24	230.30	U	N/A	I C 2, II C 2	UPLAND	348		348						0.07			
2	B	4	230.30	230.37	PSS1B	FLAT - ORGANIC	II B 2	WETLAND	344	344							0.07			
2	B	4	230.37	230.39	U	N/A	I C 2, II C 2	UPLAND	117		117						0.02			
2	B	4	230.39	230.40	PSS1/4B	FLAT - ORGANIC	II C 2, II A 3	WETLAND	28	28							0.01			
2	B	4	230.40	230.40	PSS1/4B	SLOPE	II C 2, II A 3	WETLAND	34	34							0.01			
2	B	WB-W	230.40	230.40	PSS1/4B	SLOPE	II C 2, II A 3	WETLAND	13	13										0.00
2	B	WB-W	230.40	230.41	PSS1/4B	FLAT - ORGANIC	II A 3, II C 2	WETLAND	25	25										0.00
2	B	WB-W	230.41	230.41	U	N/A	I C 2, II C 2	UPLAND	22		22									0.00
2	B	4	230.41	230.44	U	N/A	I C 2, II C 2	UPLAND	139		139						0.03			
2	B	4	230.44	230.49	U	N/A	I A 2, II C 2	UPLAND	277		277						0.05			
2	B	4	230.49	230.51	PSS1/4B	FLAT - ORGANIC	II A 3, II C 2	WETLAND	85	85							0.02			
2	B	4	230.51	230.51	U	N/A	I A 2, II C 2	UPLAND	17		17						0.00			
2	B	4	230.51	230.53	U	N/A	I C 2, II C 2	UPLAND	82		82						0.02			
2	B	WB-W	230.53	230.54	U	N/A	I C 2, II C 2	UPLAND	55		55									0.01
2	B	WB-W	230.54	230.54	U	N/A	II C 2, II B 2	UPLAND	5		5									0.00
2	B	4	230.54	230.60	U	N/A	II C 2, II B 2	UPLAND	323		323						0.06			
2	B	4	230.60	230.61	PSS1/4B	FLAT - ORGANIC	II A 3, II C 2	WETLAND	44	44							0.01			
2	B	4	230.61	230.61	PSS1B	SLOPE	II C 2, II B 2	WETLAND	20	20							0.00			
2	B	4	230.61	230.61	PSS1B	FLAT - ORGANIC	II C 2, II B 2	WETLAND	13	13							0.00			
2	B	4	230.61	230.63	U	N/A	II C 2, II B 2	UPLAND	86		86						0.02			
2	B	4	230.63	230.64	PSS1B	FLAT - ORGANIC	II C 2, II B 2	WETLAND	28	28							0.01			
2	B	4	230.64	230.64	PSS1B	SLOPE	II C 2, II B 2	WETLAND	20	20							0.00			
2	B	4	230.64	230.66	PSS4/1B	FLAT - ORGANIC	II A 2, II C 2	WETLAND	134	134							0.03			
2	B	4	230.66	230.80	U	N/A	I C 2, II C 2	UPLAND	736		736						0.14			
2	B	4	230.80	230.88	U	N/A	I A 3, II C 2	UPLAND	417		417						0.08			
2	B	4	230.88	230.90	PSS1/4B	FLAT - ORGANIC	II A 3, II B 2	WETLAND	81	81							0.02			
2	B	4	230.90	230.94	U	N/A	I C 2	UPLAND	214		214						0.04			
2	B	4	230.94	230.97	U	N/A	I A 3, II C 2	UPLAND	146		146						0.03			
2	B	4	230.97	230.99	U	N/A	I C 2	UPLAND	124		124						0.02			
2	B	4	230.99	231.00	PSS1/4B	FLAT - ORGANIC	II C 2, II B 2	WETLAND	37	37							0.01			
2	B	4	231.00	231.01	PSS1/4B	SLOPE	I A 3, II B 2	WETLAND	56	56							0.01			
2	B	4	231.01	231.02	D	N/A	NONE	DISTURBED	69			69					0.01			
2	B	4	231.02	231.03	PSS1/EM1C	DEPRESSIONAL	II B 2, III A 2	WETLAND	60	60							0.01			
2	B	4	231.03	231.04	U	N/A	I C 2, II C 2	UPLAND	35		35						0.01			
2	B	4	231.04	231.04	PSS1/4B	FLAT - ORGANIC	II C 2, II B 2	WETLAND	24	24							0.00			
2	B	4	231.04	231.05	PSS1B	SLOPE	II C 2, II B 2	WETLAND	27	27							0.01			
2	B	4	231.05	231.06	PSS1/EM1B	FLAT - ORGANIC	II C 2, III A 2	WETLAND	73	73							0.01			
2	B	4	231.06	231.07	PSS1/4B	SLOPE	II A 3, II C 2	WETLAND	21	21							0.00			
2	B	4	231.07	231.09	U	N/A	I C 2, II B 2	UPLAND	128		128						0.02			
2	B	4	231.09	231.16	PSS1B	SLOPE	II B 2, II C 2	WETLAND	388	388							0.07			
2	B	4	231.16	231.18	PSS1/4B	SLOPE	II A 3, II C 2	WETLAND	72	72							0.01			
2	B	4	231.18	231.19	PSS1B	SLOPE	II B 2, II C 2	WETLAND	40	40							0.01			
2	B	4	231.19	231.19	PSS1B	SLOPE	II C 2, II B 2	WETLAND	50	50							0.01			
2	B	4	231.19	231.22	PSS1C	SLOPE	II B 2	WETLAND	126	126							0.02			
2	B	4	231.22	231.27	PSS1B	SLOPE	II C 2, II B 2	WETLAND	249	249							0.05			
2	B	4	231.27	231.37	PSS1/EM1B	FLAT - ORGANIC	II C 2, III A 2	WETLAND	537	537							0.10			
2	B	4	231.37	231.37	PSS1/4B	FLAT - ORGANIC	II C 2, II A 3	WETLAND	22	22							0.00			
2	B	4	231.37	231.39	PSS1/EM1E	SLOPE	II C 2, III A 2	WETLAND	89	89							0.02			
2	B	4	231.39	231.40	U	N/A	II A 3, II B 2	UPLAND	63		63						0.01			
2	B	4	231.40	231.41	PSS1/4B	SLOPE	II C 2, II A 3	WETLAND	62	62							0.01			
2	B	4	231.41	231.42	PSS1/EM1E	SLOPE	II C 2, III A 2	WETLAND	56	56							0.01			
2	B	4	231.42	231.45	PSS1/4B	FLAT - ORGANIC	II C 2, II A 3	WETLAND	161	161							0.03			
2	B	4	231.45	231.53	PSS1/EM1E	SLOPE	II C 2, III A 2	WETLAND	394	394							0.07			
2	B	4	231.53	231.55	PSS1/4B	FLAT - ORGANIC	II C 2, II A 3	WETLAND	94	94							0.02			
2	B	4	231.55	231.58	PSS1/EM1E	SLOPE	II C 2, III A 2	WETLAND	164	164							0.03			
2	B	4	231.58	231.59	PSS1/4B	FLAT - ORGANIC	II C 2, II A 3	WETLAND	69	69							0.01			
2	B	4	231.59	231.64	PSS1/EM1E	SLOPE	II C 2, III A 2	WETLAND	251	251							0.05			
2	B	4	231.64	231.66	PSS1/4B	FLAT - ORGANIC	II C 2, II A 3	WETLAND	119	119							0.02			
2	B	4	231.66	231.74	PSS1/EM1E	SLOPE	II C 2, III A 2	WETLAND	400	400							0.08			
2	B	4	231.74	231.79	PSS1B	SLOPE	II C 2	WETLAND	292	292							0.06			
2	B	4	231.79	231.81	PSS1/4B	FLAT - ORGANIC	II C 2, II A 3	WETLAND	118	118							0.02			
2	B	4	231.81	231.87	PSS1/EM1B	FLAT - ORGANIC	II C 2, III A 2	WETLAND	296	296							0.06			
2	B	4	231.87	231.88	PSS1B	SLOPE	II C 2	WETLAND	59	59							0.01			
2	B	4	231.88	231.92	PSS1/EM1B	FLAT - ORGANIC	II C 2, III A 2	WETLAND	231	231							0.04			
2	B	4	231.92	232.12	PSS1/4B	FLAT - ORGANIC	II C 2, II A 3	WETLAND	1019	1019							0.19			
2	B	4	232.12	232.15	U	N/A	I C 2	UPLAND	175		175						0.03			
2	B	4	232.15	232.18	PSS1/4B	FLAT - ORGANIC	II C 2, II A 3	WETLAND	142	142							0.03			
2	B	4	232.18	232.19	PSS1/EM1B	FLAT - ORGANIC	II C 2, III A 2	WETLAND	44	44							0.01			
2	B	4	232.19	232.30	PSS1/4B	FLAT - ORGANIC	II C 2, II A 3	WETLAND	591	591							0.11			
2	B	4	232.30	232.34	PSS1/EM1B	FLAT - ORGANIC	II C 2, III A 2	WETLAND	244	244							0.05			

SPREAD	SECTION	ROW MODE	FROM MP	TO MP	NWI CODE	HGM CLASS	VIERECK	DESCRIPTION	LINEAR FEET	WETLAND FEET	UPLAND FEET	DISTURBED FEET	Comments	Mode 1 - Ice Workpad (miles)	Mode 2 - Frost Pack (miles)	Mode 3 - Timber Mats	Mode 4 - Granular Workpad	Mode 5A - Grade	Mode 5B - Mountain Grade	Stream & Flood Plain Crossings
2	B	4	232.34	232.37	PSS1/4B	FLAT - ORGANIC	II C 2, II A 3	WETLAND	129	129							0.02			
2	B	4	232.37	232.40	PSS1/EM1B	FLAT - ORGANIC	II C 2, III A 2	WETLAND	161	161							0.03			
2	B	4	232.40	232.41	PSS1/4B	FLAT - ORGANIC	II C 2, II A 3	WETLAND	83	83							0.02			
2	B	4	232.41	232.43	PSS1/EM1B	SLOPE	II C 2, III A 3	WETLAND	60	60							0.01			
2	B	4	232.43	232.45	PSS1/EM1B	FLAT - ORGANIC	II C 2, III A 2	WETLAND	123	123							0.02			
2	B	4	232.45	232.48	U	N/A	I C 2	UPLAND	165		165						0.03			
2	B	4	232.48	232.50	PSS1/4B	FLAT - ORGANIC	II C 2, II A 3	WETLAND	119	119							0.02			
2	B	4	232.50	232.53	U	N/A	I C 2	UPLAND	170		170						0.03			
2	B	4	232.53	232.58	PSS1/4B	FLAT - ORGANIC	II C 2, II A 3	WETLAND	262	262							0.05			
2	B	4	232.58	232.60	PSS1/EM1B	FLAT - ORGANIC	II C 2, III A 2	WETLAND	104	104							0.02			
2	B	4	232.60	232.62	PSS1/EM1E	SLOPE	II C 2, III A 2	WETLAND	80	80							0.02			
2	B	4	232.62	232.65	PSS1/EM1B	SLOPE	II C 2, III A 2	WETLAND	152	152							0.03			
2	B	4	232.65	232.66	PSS1/EM1E	SLOPE	II C 2, III A 2	WETLAND	50	50							0.01			
2	B	4	232.66	232.71	PSS1/4B	SLOPE	II C 2, II A 3	WETLAND	255	255							0.05			
2	B	4	232.71	232.75	PSS1/4B	FLAT - ORGANIC	II C 2, I A 3	WETLAND	259	259							0.05			
2	B	4	232.75	232.81	PSS1/4B	SLOPE	II C 2, II A 3	WETLAND	298	298							0.06			
2	B	4	232.81	232.93	PSS4/1B	FLAT - ORGANIC	II A 2, II C 2	WETLAND	608	608							0.12			
2	B	4	232.93	232.93	PSS1/EM1B	SLOPE	II C 2, III A 2	WETLAND	15	15							0.00			
2	B	4	232.93	232.94	PSS4/1B	FLAT - ORGANIC	II A 2, II C 2	WETLAND	36	36							0.01			
2	B	4	232.94	232.94	PSS1/EM1B	SLOPE	II C 2, III A 2	WETLAND	25	25							0.00			
2	B	4	232.94	233.04	PSS4/1B	FLAT - ORGANIC	II A 2, II C 2	WETLAND	517	517							0.10			
2	B	4	233.04	233.05	U	N/A	I C 2	UPLAND	84		84						0.02			
2	B	WB-W	233.05	233.07	U	N/A	I C 2	UPLAND	90		90									0.02
2	B	4	233.07	233.10	U	N/A	I C 2	UPLAND	149		149						0.03			
2	B	4	233.10	233.11	U	N/A	I A 2	UPLAND	52		52						0.01			
2	B	4	233.11	233.13	PSS4/1B	FLAT - ORGANIC	II A 2, II C 2	WETLAND	99	99							0.02			
2	B	4	233.13	233.16	PSS1/4B	FLAT - ORGANIC	II C 2, II A 3	WETLAND	168	168							0.03			
2	B	4	233.16	233.17	PSS1/EM1B	SLOPE	II C 2, III A 2	WETLAND	28	28							0.01			
2	B	4	233.17	233.17	PSS1/4B	FLAT - ORGANIC	II C 2, II A 3	WETLAND	42	42							0.01			
2	B	4	233.17	233.18	PSS1/EM1B	SLOPE	II C 2, III A 2	WETLAND	28	28							0.01			
2	B	4	233.18	233.20	PSS1/4B	FLAT - ORGANIC	II C 2, II A 3	WETLAND	128	128							0.02			
2	B	4	233.20	233.23	PSS1/EM1B	SLOPE	II C 2, III A 2	WETLAND	121	121							0.02			
2	B	4	233.23	233.24	PSS1/EM1B	FLAT - ORGANIC	II C 2, III A 2	WETLAND	62	62							0.01			
2	B	4	233.24	233.24	PSS1/EM1B	SLOPE	II C 2, III A 2	WETLAND	7	7							0.00			
2	B	4	233.24	233.26	PSS1/EM1B	FLAT - ORGANIC	II C 2, III A 2	WETLAND	89	89							0.02			
2	B	4	233.26	233.26	PSS1/EM1B	SLOPE	II C 2, III A 2	WETLAND	41	41							0.01			
2	B	4	233.26	233.29	PSS1/4B	FLAT - ORGANIC	II C 2, II A 3	WETLAND	140	140							0.03			
2	B	4	233.29	233.33	PSS1/EM1B	SLOPE	II C 2, III A 2	WETLAND	190	190							0.04			
2	B	4	233.33	233.46	PSS1/EM1B	FLAT - ORGANIC	II C 2, III A 2	WETLAND	690	690							0.13			
2	B	4	233.46	233.50	PSS1/EM1C	SLOPE	II C 2, III A 2	WETLAND	248	248							0.05			
2	B	4	233.50	233.53	PSS1/EM1B	FLAT - ORGANIC	II C 2, III A 2	WETLAND	110	110							0.02			
2	B	4	233.53	233.57	PSS1/EM1C	SLOPE	II C 2, III A 2	WETLAND	213	213							0.04			
2	B	4	233.57	233.59	PSS1/EM1B	FLAT - ORGANIC	II C 2, III A 2	WETLAND	117	117							0.02			
2	B	4	233.59	233.63	PSS1/4B	FLAT - ORGANIC	II C 2, II A 2	WETLAND	207	207							0.04			
2	B	4	233.63	233.68	PSS1/EM1E	SLOPE	II C 2, III A 3	WETLAND	254	254							0.05			
2	B	4	233.68	233.71	PSS1/4B	FLAT - ORGANIC	II C 2, II A 3	WETLAND	191	191							0.04			
2	B	4	233.71	233.82	PSS1/EM1B	FLAT - ORGANIC	II C 2, III A 2	WETLAND	588	588							0.11			
2	B	4	233.82	233.83	PSS1/EM1E	SLOPE	II C 2, III A 3	WETLAND	26	26							0.01			
2	B	4	233.83	233.85	U	N/A	I C 1	UPLAND	130		130						0.02			
2	B	4	233.85	233.98	PSS1/4B	SLOPE	II C 2, II A 3	WETLAND	696	696							0.13			
2	B	4	233.98	234.08	PSS1/4B	FLAT - ORGANIC	II A 3, II C 2	WETLAND	502	502							0.10			
2	B	4	234.08	234.13	PSS1/EM1E	DEPRESSIONAL	II C 2, III A 2	WETLAND	263	263							0.05			
2	B	4	234.13	234.19	PSS1/4B	FLAT - ORGANIC	II A 3, II C 2	WETLAND	330	330							0.06			
2	B	WB-W	234.19	234.19	PSS1/4B	FLAT - ORGANIC	II A 3, II C 2	WETLAND	1	1										0.00
2	B	WB-W	234.19	234.20	PSS1/EM1E	SLOPE	II C 2, III A 2	WETLAND	25	25										0.00
2	B	WB-W	234.20	234.20	PSS1/4B	FLAT - ORGANIC	II A 3, II C 2	WETLAND	34	34										0.01
2	B	4	234.20	234.21	PSS1/4B	FLAT - ORGANIC	II A 3, II C 2	WETLAND	49	49							0.01			
2	B	4	234.21	234.22	PSS1/EM1E	SLOPE	II C 2, III A 2	WETLAND	26	26							0.00			
2	B	4	234.22	234.25	PSS1/4B	FLAT - ORGANIC	II A 3, II C 2	WETLAND	153	153							0.03			
2	B	4	234.25	234.29	PEM1/SS1E	SLOPE	III A 3, II C 2	WETLAND	215	215							0.04			
2	B	4	234.29	234.31	PSS1/EM1B	FLAT - ORGANIC	II C 2, III A 2	WETLAND	127	127							0.02			
2	B	WB-W	234.31	234.31	PSS1/EM1B	FLAT - ORGANIC	II C 2, III A 2	WETLAND	3	3										0.00
2	B	WB-W	234.31	234.32	PEM1/SS1E	SLOPE	III A 3, II C 2	WETLAND	44	44										0.01
2	B	WB-W	234.32	234.32	PSS1/EM1B	FLAT - ORGANIC	II C 2, III A 2	WETLAND	14	14										0.00
2	B	4	234.32	234.40	PSS1/EM1B	FLAT - ORGANIC	II C 2, III A 2	WETLAND	419	419							0.08			
2	B	4	234.40	234.42	PSS1/4B	FLAT - ORGANIC	II C 2, II A 2	WETLAND	121	121							0.02			
2	B	4	234.42	234.45	PSS1/EM1B	FLAT - ORGANIC	II C 2, III A 2	WETLAND	156	156							0.03			
2	B	4	234.45	234.49	PSS1/EM1B	SLOPE	II C 2, III A 2	WETLAND	205	205							0.04			
2	B	4	234.49	234.59	U	N/A	II A 2, II C 2	UPLAND	506		506						0.10			
2	B	4	234.59	234.60	U	N/A	I C 2	UPLAND	88		88						0.02			
2	B	4	234.60	234.64	PSS1/4B	SLOPE	II C 2, II A 3	WETLAND	202	202							0.04			
2	B	4	234.64	234.66	PSS1/4B	FLAT - ORGANIC	II A 3, II C 2	WETLAND	85	85							0.02			

SPREAD	SECTION	ROW MODE	FROM MP	TO MP	NWI CODE	HGM CLASS	VIERECK	DESCRIPTION	LINEAR FEET	WETLAND FEET	UPLAND FEET	DISTURBED FEET	Comments	Mode 1 - Ice Workpad (miles)	Mode 2 - Frost Pack (miles)	Mode 3 - Timber Mats	Mode 4 - Granular Workpad	Mode 5A - Grade	Mode 5B - Mountain Grade	Stream & Flood Plain Crossings
2	B	4	234.66	234.70	PSS1/4B	SLOPE	II C 2, II A 3	WETLAND	228	228							0.04			
2	B	4	234.70	234.71	PSS1/4B	FLAT - ORGANIC	II A 3, II C 2	WETLAND	44	44							0.01			
2	B	4	234.71	234.76	PSS1/4B	SLOPE	II C 2, II A 3	WETLAND	237	237							0.04			
2	B	4	234.76	234.77	PSS1/4B	FLAT - ORGANIC	II A 3, II C 2	WETLAND	99	99							0.02			
2	B	4	234.77	234.81	U	N/A	I A 2	UPLAND	178		178						0.03			
2	B	4	234.81	234.81	PSS1/EM1C	SLOPE	II C 2, II A 2	WETLAND	14	14							0.00			
2	B	4	234.81	234.83	U	N/A	I A 2	UPLAND	102		102						0.02			
2	B	4	234.83	235.01	PSS1/4B	FLAT - ORGANIC	II C 2, II A 2	WETLAND	938	938							0.18			
2	B	4	235.01	235.02	PSS1/4B	FLAT - ORGANIC	II C 2, II A 2	WETLAND	47	47							0.01			
2	B	4	235.02	235.10	PSS1/4B	FLAT - ORGANIC	II C 2, II A 2	WETLAND	441	441							0.08			
2	B	4	235.10	235.12	U	N/A	I A 2	UPLAND	81		81						0.02			
2	B	4	235.12	235.13	PEM1/SS1C	DEPRESSIONAL	III A 2, II C 2	WETLAND	80	80							0.02			
2	B	4	235.13	235.14	U	N/A	I A 2	UPLAND	72		72						0.01			
2	B	4	235.14	235.20	PEM1/SS1C	DEPRESSIONAL	III A 2, II C 2	WETLAND	306	306							0.06			
2	B	5A	235.20	235.22	PEM1/SS1C	DEPRESSIONAL	III A 2, II C 2	WETLAND	77	77								0.01		
2	B	5A	235.22	235.23	U	N/A	I C 2	UPLAND	73		73							0.01		
2	B	5A	235.23	235.23	PEM1/SS1C	DEPRESSIONAL	III A 2, II C 2	WETLAND	8	8								0.00		
2	B	5A	235.23	235.27	U	N/A	I C 2	UPLAND	199		199							0.04		
2	B	5A	235.27	235.29	PSS4B	FLAT - ORGANIC	II A 2	WETLAND	127	127								0.02		
2	B	5A	235.29	235.31	U	N/A	I A 2, II B 2	UPLAND	105		105							0.02		
2	B	5A	235.31	235.32	PSS1/EM1E	SLOPE	II C 2, III A 2	WETLAND	35	35								0.01		
2	B	5A	235.32	235.44	PSS4B	FLAT - ORGANIC	II A 2	WETLAND	633	633								0.12		
2	B	5A	235.44	235.45	PSS1/EM1E	SLOPE	II C 2, III A 2	WETLAND	32	32								0.01		
2	B	5A	235.45	235.48	PSS4B	FLAT - ORGANIC	II A 2	WETLAND	164	164								0.03		
2	B	5A	235.48	235.48	PSS1/EM1E	SLOPE	II C 2, III A 2	WETLAND	28	28								0.01		
2	B	5A	235.48	235.51	U	N/A	I A 2, II B 2	UPLAND	121		121							0.02		
2	B	5A	235.51	235.51	PSS1/EM1E	SLOPE	II C 2, III A 2	WETLAND	28	28								0.01		
2	B	5A	235.51	235.53	PSS4/1B	FLAT - ORGANIC	II A 2, II C 2	WETLAND	110	110								0.02		
2	B	WB-W	235.53	235.53	PSS4/1B	FLAT - ORGANIC	II A 2, II C 2	WETLAND	1	1										0.00
2	B	WB-W	235.53	235.54	PSS1/EM1E	SLOPE	II C 2, III A 2	WETLAND	59	59										0.01
2	B	5A	235.54	235.55	PSS1/EM1E	SLOPE	II C 2, III A 2	WETLAND	13	13								0.00		
2	B	5A	235.55	235.71	U	N/A	I A 3, II C 2	UPLAND	872		872							0.17		
2	B	5A	235.71	235.72	PSS1E	SLOPE	II C 2	WETLAND	40	40								0.01		
2	B	5A	235.72	235.82	U	N/A	I A 3, II C 2	UPLAND	551		551							0.10		
2	B	5A	235.82	235.83	PSS1/4B	DEPRESSIONAL	II A 3, II C 2	WETLAND	60	60								0.01		
2	B	5A	235.83	235.90	U	N/A	I A 3, II C 2	UPLAND	371		371							0.07		
2	B	5A	235.90	235.91	PSS1/4B	DEPRESSIONAL	II A 3, II C 2	WETLAND	52	52								0.01		
2	B	5A	235.91	235.94	U	N/A	I A 3, II C 2	UPLAND	137		137							0.03		
2	B	5A	235.94	235.94	PSS1E	SLOPE	II C 2	WETLAND	4	4								0.00		
2	B	WB-W	235.94	235.96	PSS1E	SLOPE	II C 2	WETLAND	110	110										0.02
2	B	WB-W	235.96	235.96	PSS1/4B	DEPRESSIONAL	II A 3, II C 2	WETLAND	10	10										0.00
2	B	5A	235.96	235.97	PSS1/4B	DEPRESSIONAL	II A 3, II C 2	WETLAND	32	32								0.01		
2	B	5A	235.97	236.00	PSS1B	DEPRESSIONAL	II C 2	WETLAND	134	134								0.03		
2	B	5A	236.00	236.07	U	N/A	II A 3, II C 2	UPLAND	421		421							0.08		
2	B	5A	236.07	236.08	D	N/A	NONE	DISTURBED	48			48						0.01		
2	B	5A	236.08	236.13	U	N/A	II A 3, II C 2	UPLAND	241		241							0.05		
2	B	5A	236.13	236.20	PSS1/4B	FLAT - ORGANIC	II C 2, II A 2	WETLAND	395	395								0.07		
2	B	5A	236.20	236.21	U	N/A	II A 3, II C 2	UPLAND	38		38							0.01		
2	B	5A	236.21	236.26	PSS1/4B	DEPRESSIONAL	II A 3, II C 2	WETLAND	280	280								0.05		
2	B	5A	236.26	236.27	U	N/A	I A 2	UPLAND	46		46							0.01		
2	B	5A	236.27	236.34	U	N/A	I A 2, II C 2	UPLAND	361		361							0.07		
2	B	5A	236.34	236.48	U	N/A	I C 2, II B 2	UPLAND	729		729							0.14		
2	B	5A	236.48	236.50	R3USC	RIVERINE	NONE	WETLAND	124	124								0.02		
2	B	WB-W	236.50	236.51	R3USC	RIVERINE	NONE	WETLAND	16	16										0.00
2	B	WB-W	236.51	236.52	R3UBH	RIVERINE	NONE	WETLAND	57	57										0.01
2	B	WB-W	236.52	236.52	D	N/A	NONE	DISTURBED	7			7								0.00
2	B	WB-W	236.52	236.52	PSS1A	RIVERINE	I A 3, II B 2	WETLAND	10	10										0.00
2	B	5A	236.52	236.53	PSS1A	RIVERINE	I A 3, II B 2	WETLAND	40	40								0.01		
2	B	5A	236.53	236.60	U	N/A	I A 2, II B 2	UPLAND	380		380							0.07		
2	B	5A	236.60	236.68	U	N/A	I A 2, II C 2	UPLAND	406		406							0.08		
2	B	5A	236.68	236.68	D	N/A	NONE	DISTURBED	35			35						0.01		
2	B	5A	236.68	236.75	U	N/A	I A 2, II C 2	UPLAND	353		353							0.07		
2	B	5A	236.75	236.76	PSS4/1B	FLAT - ORGANIC	II A 2, II C 2	WETLAND	46	46								0.01		
2	B	4	236.76	236.82	PSS4/1B	FLAT - ORGANIC	II A 2, II C 2	WETLAND	303	303							0.06			
2	B	4	236.82	236.83	PSS1/EM1E	SLOPE	II C 2, III A 3	WETLAND	95	95							0.02			
2	B	4	236.83	236.88	PSS1/4B	FLAT - ORGANIC	II C 2, II A 3	WETLAND	217	217							0.04			
2	B	4	236.88	236.89	PSS1/EM1E	SLOPE	II C 2, III A 3	WETLAND	70	70							0.01			
2	B	4	236.89	236.93	PSS4/1B	FLAT - ORGANIC	II A 2, II C 2	WETLAND	239	239							0.05			
2	B	4	236.93	237.11	PSS1/EM1E	SLOPE	II C 2, III A 3	WETLAND	905	905							0.17			
2	B	4	237.11	237.15	PSS4/1B	FLAT - ORGANIC	II A 2, II C 2	WETLAND	261	261							0.05			
2	B	4	237.15	237.16	PSS1/EM1E	SLOPE	II C 2, III A 3	WETLAND	20	20							0.00			
2	B	4	237.16	237.18	PSS4/1B	FLAT - ORGANIC	II A 2, II C 2	WETLAND	118	118							0.02			

SPREAD	SECTION	ROW MODE	FROM MP	TO MP	NWI CODE	HGM CLASS	VIERECK	DESCRIPTION	LINEAR FEET	WETLAND FEET	UPLAND FEET	DISTURBED FEET	Comments	Mode 1 - Ice Workpad (miles)	Mode 2 - Frost Pack (miles)	Mode 3 - Timber Mats	Mode 4 - Granular Workpad	Mode 5A - Grade	Mode 5B - Mountain Grade	Stream & Flood Plain Crossings
2	B	4	237.18	237.20	PSS1/EM1E	SLOPE	II C 2, III A 3	WETLAND	92	92							0.02			
2	B	4	237.20	237.43	PSS4/1B	FLAT - ORGANIC	II A 2, II C 2	WETLAND	1237	1237							0.23			
2	B	4	237.43	237.47	PSS1/EM1E	SLOPE	II C 2, III A 3	WETLAND	223	223							0.04			
2	B	4	237.47	237.49	PEM1E	DEPRESSIONAL	III A 2	WETLAND	94	94							0.02			
2	B	4	237.49	237.55	PSS1/4B	FLAT - ORGANIC	II C 2, II A 2	WETLAND	294	294							0.06			
2	B	4	237.55	237.56	PSS1/EM1E	SLOPE	II C 2, III A 3	WETLAND	78	78							0.01			
2	B	4	237.56	237.58	PEM1E	RIVERINE	III A 3	WETLAND	75	75							0.01			
2	B	WB-W	237.58	237.59	PEM1E	RIVERINE	III A 3	WETLAND	60	60										0.01
2	B	4	237.59	237.59	PEM1E	RIVERINE	III A 3	WETLAND	2	2							0.00			
2	B	4	237.59	237.61	PSS1/EM1B	SLOPE	II C 2, III A 2	WETLAND	120	120							0.02			
2	B	4	237.61	237.65	U	N/A	II A 2, II B 2	UPLAND	183		183						0.03			
2	B	4	237.65	237.75	PSS1/EM1B	SLOPE	II C 2, III A 2	WETLAND	569	569							0.11			
2	B	4	237.75	237.76	U	N/A	I C 2	UPLAND	47		47						0.01			
2	B	4	237.76	237.79	PSS1/4B	FLAT - ORGANIC	II C 2, II A 2	WETLAND	155	155							0.03			
2	B	4	237.79	237.85	PSS4/1B	FLAT - ORGANIC	II A 2, II C 2	WETLAND	283	283							0.05			
2	B	4	237.85	237.90	U	N/A	I C 2	UPLAND	261		261						0.05			
2	B	4	237.90	237.91	PSS1/4B	SLOPE	II A 3, II C 2	WETLAND	72	72							0.01			
2	B	4	237.91	237.92	U	N/A	I C 2	UPLAND	31		31						0.01			
2	B	4	237.92	238.02	PSS1/4B	SLOPE	II A 3, II C 2	WETLAND	542	542							0.10			
2	B	4	238.02	238.13	PSS4/1B	FLAT - ORGANIC	II A 2, II C 2	WETLAND	608	608							0.12			
2	B	4	238.13	238.17	PSS1/EM1C	SLOPE	II C 2, III A 2	WETLAND	175	175							0.03			
2	B	4	238.17	238.21	PSS4/1B	FLAT - ORGANIC	II A 2, II C 2	WETLAND	233	233							0.04			
2	B	4	238.21	238.23	PSS1/EM1C	SLOPE	II C 2, III A 2	WETLAND	80	80							0.02			
2	B	4	238.23	238.26	PSS4/1B	FLAT - ORGANIC	II A 2, II C 2	WETLAND	165	165							0.03			
2	B	4	238.26	238.26	PSS1/EM1C	SLOPE	II C 2, III A 2	WETLAND	24	24							0.00			
2	B	4	238.26	238.28	PSS4/1B	FLAT - ORGANIC	II A 2, II C 2	WETLAND	124	124							0.02			
2	B	4	238.28	238.29	PSS1/EM1C	SLOPE	II C 2, III A 2	WETLAND	32	32							0.01			
2	B	4	238.29	238.33	PSS4/1B	FLAT - ORGANIC	II A 2, II C 2	WETLAND	198	198							0.04			
2	B	4	238.33	238.34	PSS1/EM1C	SLOPE	II C 2, III A 2	WETLAND	50	50							0.01			
2	B	4	238.34	238.36	PSS4/1B	FLAT - ORGANIC	II A 2, II C 2	WETLAND	130	130							0.02			
2	B	4	238.36	238.39	PSS1/EM1C	SLOPE	II C 2, III A 2	WETLAND	171	171							0.03			
2	B	4	238.39	238.43	PSS1/4B	FLAT - ORGANIC	II A 3, II C 2	WETLAND	184	184							0.03			
2	B	4	238.43	238.46	PSS1/EM1C	SLOPE	II C 2, III A 2	WETLAND	149	149							0.03			
2	B	4	238.46	238.48	PSS1/4B	FLAT - ORGANIC	II A 3, II C 2	WETLAND	115	115							0.02			
2	B	4	238.48	238.52	PSS1/EM1C	SLOPE	II C 2, III A 2	WETLAND	188	188							0.04			
2	B	4	238.52	238.55	PSS1/4B	FLAT - ORGANIC	II A 3, II C 2	WETLAND	200	200							0.04			
2	B	4	238.55	238.58	PSS1/EM1C	SLOPE	II C 2, III A 2	WETLAND	168	168							0.03			
2	B	4	238.58	238.63	PSS1/4B	FLAT - ORGANIC	II A 3, II C 2	WETLAND	246	246							0.05			
2	B	4	238.63	238.64	PSS1/EM1C	SLOPE	II C 2, III A 2	WETLAND	28	28							0.01			
2	B	4	238.64	238.68	PSS1/4B	FLAT - ORGANIC	II A 3, II C 2	WETLAND	222	222							0.04			
2	B	4	238.68	238.70	PSS1/EM1C	SLOPE	II C 2, III A 2	WETLAND	112	112							0.02			
2	B	4	238.70	238.71	PSS4/1B	FLAT - ORGANIC	II A 2, II C 2	WETLAND	46	46							0.01			
2	B	4	238.71	238.73	PSS1/EM1C	SLOPE	II C 2, III A 2	WETLAND	89	89							0.02			
2	B	4	238.73	238.78	PSS1/4B	FLAT - ORGANIC	II A 3, II C 2	WETLAND	275	275							0.05			
2	B	4	238.78	238.79	PSS1/EM1C	SLOPE	II C 2, III A 2	WETLAND	57	57							0.01			
2	B	4	238.79	238.80	PSS1/4B	FLAT - ORGANIC	II A 3, II C 2	WETLAND	67	67							0.01			
2	B	4	238.80	238.89	PSS1/EM1C	SLOPE	II C 2, III A 2	WETLAND	445	445							0.08			
2	B	4	238.89	238.89	PSS4/1B	FLAT - ORGANIC	II A 2, II C 2	WETLAND	44	44							0.01			
2	B	4	238.89	238.91	PSS1/EM1C	SLOPE	II C 2, III A 2	WETLAND	110	110							0.02			
2	B	4	238.91	238.94	PSS1/4B	FLAT - ORGANIC	II A 3, II C 2	WETLAND	154	154							0.03			
2	B	4	238.94	238.96	PSS1/EM1C	SLOPE	II C 2, III A 2	WETLAND	90	90							0.02			
2	B	4	238.96	239.00	PSS1/4B	FLAT - ORGANIC	II A 3, II C 2	WETLAND	225	225							0.04			
2	B	4	239.00	239.02	PSS1/EM1C	SLOPE	II C 2, III A 2	WETLAND	60	60							0.01			
2	B	4	239.02	239.07	PSS1/4B	FLAT - ORGANIC	II A 3, II C 2	WETLAND	285	285							0.05			
2	B	4	239.07	239.08	PSS1/EM1C	SLOPE	II C 2, III A 2	WETLAND	66	66							0.01			
2	B	4	239.08	239.13	PSS1/4B	FLAT - ORGANIC	II A 3, II C 2	WETLAND	235	235							0.04			
2	B	4	239.13	239.13	PSS1/EM1C	SLOPE	II C 2, III A 2	WETLAND	21	21							0.00			
2	B	4	239.13	239.45	PSS1/4B	FLAT - ORGANIC	II A 3, II C 2	WETLAND	1671	1671							0.32			
2	B	4	239.45	239.47	U	N/A	I C 2	UPLAND	127		127						0.02			
2	B	4	239.47	239.51	PSS4B	FLAT - ORGANIC	II A 2	WETLAND	219	219							0.04			
2	B	4	239.51	239.53	PSS4/1B	FLAT - ORGANIC	II A 2, II C 2	WETLAND	69	69							0.01			
2	B	4	239.53	239.56	PSS4B	FLAT - ORGANIC	II A 2	WETLAND	173	173							0.03			
2	B	4	239.56	239.60	PSS4/1B	FLAT - ORGANIC	II A 2, II C 2	WETLAND	238	238							0.05			
2	B	4	239.60	239.76	U	N/A	I C 2	UPLAND	838		838						0.16			
2	B	4	239.76	239.79	PFO4/SS1B	FLAT - ORGANIC	I A 2, II B 2	WETLAND	142	142							0.03			
2	B	4	239.79	239.82	U	N/A	I C 2	UPLAND	172		172						0.03			
2	B	WB-W	239.82	239.83	U	N/A	I C 2	UPLAND	60		60									0.01
2	B	4	239.83	239.97	U	N/A	I C 2	UPLAND	714		714						0.14			
2	B	4	239.97	239.99	PFO4/SS1B	FLAT - ORGANIC	I A 2, II C 2	WETLAND	103	103							0.02			
2	B	4	239.99	240.02	PSS4/1B	FLAT - ORGANIC	II A 2, II C 2	WETLAND	160	160							0.03			
2	B	4	240.02	240.08	PFO4/SS1B	FLAT - ORGANIC	I A 2, II C 2	WETLAND	352	352							0.07			
2	B	4	240.08	240.13	PSS4/1B	FLAT - ORGANIC	II A 2, II C 2	WETLAND	255	255							0.05			

SPREAD	SECTION	ROW MODE	FROM MP	TO MP	NWI CODE	HGM CLASS	VIERECK	DESCRIPTION	LINEAR FEET	WETLAND FEET	UPLAND FEET	DISTURBED FEET	Comments	Mode 1 - Ice Workpad (miles)	Mode 2 - Frost Pack (miles)	Mode 3 - Timber Mats	Mode 4 - Granular Workpad	Mode 5A - Grade	Mode 5B - Mountain Grade	Stream & Flood Plain Crossings
2	B	4	240.13	240.14	PEM1E	SLOPE	III A 3	WETLAND	55	55							0.01			
2	B	4	240.14	240.23	PSS4/1B	FLAT - ORGANIC	II A 2, II C 2	WETLAND	470	470							0.09			
2	B	4	240.23	240.26	PEM1/SS1E	SLOPE	III A 3, II C 2	WETLAND	127	127							0.02			
2	B	4	240.26	240.32	PSS4/1B	FLAT - ORGANIC	II A 2, II C 2	WETLAND	357	357							0.07			
2	B	4	240.32	240.33	PEM1/SS1E	SLOPE	III A 3, II C 2	WETLAND	18	18							0.00			
2	B	4	240.33	240.33	PEM1C	SLOPE	III A 3	WETLAND	30	30							0.01			
2	B	4	240.33	240.34	PEM1/SS1E	SLOPE	III A 3, II C 2	WETLAND	12	12							0.00			
2	B	4	240.34	240.39	PSS1/3B	FLAT - ORGANIC	II C 2	WETLAND	307	307							0.06			
2	B	4	240.39	240.42	PSS1/4B	FLAT - ORGANIC	II A 3, II C 2	WETLAND	150	150							0.03			
2	B	4	240.42	240.44	PEM1/SS1E	SLOPE	III A 3, II C 2	WETLAND	100	100							0.02			
2	B	WB-W	240.44	240.45	PEM1/SS1E	SLOPE	III A 3, II C 2	WETLAND	60	60										0.01
2	B	4	240.45	240.45	PEM1/SS1E	SLOPE	III A 3, II C 2	WETLAND	8	8							0.00			
2	B	4	240.45	240.48	U	N/A	I A 2, II C 2	UPLAND	147		147						0.03			
2	B	4	240.48	240.49	PFO4/SS1B	FLAT - ORGANIC	I A 2, II C 2	WETLAND	22	22							0.00			
2	B	4	240.49	240.52	PSS1/4B	FLAT - ORGANIC	II A 3, II C 2	WETLAND	198	198							0.04			
2	B	4	240.52	240.68	PSS1/3B	FLAT - ORGANIC	II C 2	WETLAND	803	803							0.15			
2	B	4	240.68	240.70	PSS1/4B	FLAT - ORGANIC	II A 3, II C 2	WETLAND	106	106							0.02			
2	B	4	240.70	240.71	PSS1/EM1C	SLOPE	II C 2, III A 2	WETLAND	56	56							0.01			
2	B	4	240.71	240.76	PFO4/SS1B	FLAT - ORGANIC	I A 2, II C 2	WETLAND	298	298							0.06			
2	B	4	240.76	240.78	PEM1/SS1E	SLOPE	III A 2	WETLAND	71	71							0.01			
2	B	4	240.78	240.79	PSS1/3B	FLAT - ORGANIC	II C 2	WETLAND	86	86							0.02			
2	B	4	240.79	240.82	PSS1/4B	FLAT - ORGANIC	II C 2, II A 2	WETLAND	161	161							0.03			
2	B	4	240.82	240.85	PFO4/SS1B	FLAT - ORGANIC	I A 2, II C 2	WETLAND	146	146							0.03			
2	B	4	240.85	240.87	PSS1/4B	FLAT - ORGANIC	II C 2, II A 2	WETLAND	112	112							0.02			
2	B	4	240.87	240.90	PFO4/SS1B	FLAT - ORGANIC	I A 2, II C 2	WETLAND	140	140							0.03			
2	B	4	240.90	240.90	U	N/A	I A 2	UPLAND	15		15						0.00			
2	B	5A	240.90	240.93	U	N/A	I A 2	UPLAND	162		162							0.03		
2	B	5A	240.93	241.01	U	N/A	I C 2	UPLAND	401		401							0.08		
2	B	5A	241.01	241.02	R3USC	RIVERINE	NONE	WETLAND	67	67								0.01		
2	B	WB-W	241.02	241.02	R3USC	RIVERINE	NONE	WETLAND	6	6										0.00
2	B	WB-W	241.02	241.03	R3UBH	RIVERINE	NONE	WETLAND	41	41										0.01
2	B	WB-W	241.03	241.04	U	N/A	I C 2	UPLAND	43		43									0.01
2	B	5A	241.04	241.05	U	N/A	I C 2	UPLAND	60		60							0.01		
2	B	5A	241.05	241.06	PSS1A	SLOPE	II B 2	WETLAND	36	36								0.01		
2	B	5A	241.06	241.09	U	N/A	I C 2	UPLAND	192		192							0.04		
2	C	5A	241.09	241.13	U	N/A	I A 2, II C 2	UPLAND	221		221							0.04		
2	C	5A	241.13	241.14	D	N/A	NONE	DISTURBED	21			21						0.00		
2	C	5A	241.14	241.16	U	N/A	I A 2, II C 2	UPLAND	139		139							0.03		
2	C	5A	241.16	241.17	U	N/A	I C 2	UPLAND	25		25							0.00		
2	C	5A	241.17	241.17	D	N/A	NONE	DISTURBED	23			23						0.00		
2	C	5A	241.17	241.19	U	N/A	I A 2	UPLAND	110		110							0.02		
2	C	5A	241.19	241.21	U	N/A	I C 3, II B 2	UPLAND	93		93							0.02		
2	C	5A	241.21	241.23	PSS1/4B	FLAT - ORGANIC	II C 2, II A 3	WETLAND	95	95								0.02		
2	C	4	241.23	241.28	PSS1/4B	FLAT - ORGANIC	II C 2, II A 3	WETLAND	264	264							0.05			
2	C	4	241.28	241.32	U	N/A	I C 2	UPLAND	221		221						0.04			
2	C	4	241.32	241.44	U	N/A	I A 2, II C 2	UPLAND	632		632						0.12			
2	C	4	241.44	241.57	PFO4/SS1B	FLAT - ORGANIC	I A 2, II C 2	WETLAND	666	666							0.13			
2	C	4	241.57	241.70	PSS1/EM1B	FLAT - ORGANIC	II C 2, III A 3	WETLAND	697	697							0.13			
2	C	4	241.70	241.85	U	N/A	I A 2, II C 2	UPLAND	782		782						0.15			
2	C	4	241.85	241.88	PSS4/1B	FLAT - ORGANIC	II A 3, II C 2	WETLAND	172	172							0.03			
2	C	4	241.88	241.90	PSS1/3B	FLAT - ORGANIC	II C 2	WETLAND	116	116							0.02			
2	C	4	241.90	241.92	PSS4/1B	FLAT - ORGANIC	II A 3, II C 2	WETLAND	88	88							0.02			
2	C	4	241.92	242.09	PSS1/3B	FLAT - ORGANIC	II C 2	WETLAND	884	884							0.17			
2	C	4	242.09	242.12	U	N/A	I A 2, II C 2	UPLAND	174		174						0.03			
2	C	4	242.12	242.20	PSS1/3B	FLAT - ORGANIC	II C 2	WETLAND	426	426							0.08			
2	C	4	242.20	242.23	PSS1/4B	FLAT - ORGANIC	I A 3, II C 2	WETLAND	167	167							0.03			
2	C	4	242.23	242.34	PSS1/3B	FLAT - ORGANIC	II C 2	WETLAND	573	573							0.11			
2	C	4	242.34	242.62	U	N/A	I A 2, II C 2	UPLAND	1482		1482						0.28			
2	C	4	242.62	242.64	U	N/A	I A 2	UPLAND	85		85						0.02			
2	C	4	242.64	242.66	U	N/A	I A 2, II C 2	UPLAND	98		98						0.02			
2	C	4	242.66	242.68	U	N/A	I A 2	UPLAND	153		153						0.03			
2	C	4	242.68	242.70	U	N/A	I A 2, II C 2	UPLAND	63		63						0.01			
2	C	WB-W	242.70	242.70	U	N/A	I A 2, II C 2	UPLAND	8		8									0.00
2	C	WB-W	242.70	242.71	U	N/A	II C 2, I A 3	UPLAND	82		82									0.02
2	C	4	242.71	242.93	U	N/A	II C 2, I A 3	UPLAND	1119		1119						0.21			
2	C	4	242.93	242.95	U	N/A	II A 2	UPLAND	107		107						0.02			
2	C	4	242.95	243.00	U	N/A	II C 2, I A 3	UPLAND	312		312						0.06			
2	C	4	243.00	243.07	U	N/A	II C 2	UPLAND	354		354						0.07			
2	C	4	243.07	243.21	U	N/A	II C 2, I A 3	UPLAND	738		738						0.14			
2	C	4	243.21	243.46	PSS1B	FLAT - ORGANIC	II C 2	WETLAND	1314	1314							0.25			
2	C	4	243.46	243.48	PSS1/4B	FLAT - ORGANIC	I A 3, II C 2	WETLAND	101	101							0.02			
2	C	4	243.48	243.82	PSS1B	FLAT - ORGANIC	II C 2	WETLAND	1813	1813							0.34			

SPREAD	SECTION	ROW MODE	FROM MP	TO MP	NWI CODE	HGM CLASS	VIERECK	DESCRIPTION	LINEAR FEET	WETLAND FEET	UPLAND FEET	DISTURBED FEET	Comments	Mode 1 - Ice Workpad (miles)	Mode 2 - Frost Pack (miles)	Mode 3 - Timber Mats	Mode 4 - Granular Workpad	Mode 5A - Grade	Mode 5B - Mountain Grade	Stream & Flood Plain Crossings
2	C	4	243.82	243.91	PEM1/SS1B	FLAT - ORGANIC	III A 2, II C 2	WETLAND	436	436							0.08			
2	C	4	243.91	243.91	D	N/A	NONE	DISTURBED	33			33					0.01			
2	C	4	243.91	243.98	PEM1/SS1B	FLAT - ORGANIC	III A 2, II C 2	WETLAND	376	376							0.07			
2	C	4	243.98	244.09	PSS4/1B	FLAT - ORGANIC	II A 2, II C 2	WETLAND	564	564							0.11			
2	C	4	244.09	244.12	PSS1/4B	FLAT - ORGANIC	II C 2, II A 2	WETLAND	143	143							0.03			
2	C	4	244.12	244.22	PEM1/SS1B	FLAT - ORGANIC	III A 2, II D 2	WETLAND	536	536							0.10			
2	C	4	244.22	244.44	PSS4/FO4B	FLAT - ORGANIC	II A 2, II C 2	WETLAND	1147	1147							0.22			
2	C	4	244.44	244.50	PSS1/EM1B	FLAT - ORGANIC	II C 2, III A 2	WETLAND	346	346							0.07			
2	C	4	244.50	244.52	PSS1/4B	FLAT - ORGANIC	I A 3, II C 2	WETLAND	98	98							0.02			
2	C	4	244.52	244.64	PSS1/EM1B	FLAT - ORGANIC	II C 2, III A 2	WETLAND	653	653							0.12			
2	C	4	244.64	244.66	PSS1/4B	SLOPE	II C 2, I A 3	WETLAND	71	71							0.01			
2	C	4	244.66	244.67	PSS1/EM1B	FLAT - ORGANIC	II C 2, III A 2	WETLAND	79	79							0.01			
2	C	4	244.67	244.68	PSS1/4B	SLOPE	II C 2, I A 3	WETLAND	30	30							0.01			
2	C	4	244.68	244.68	PSS1/4B	SLOPE	II B 2, II A 2	WETLAND	15	15							0.00			
2	C	4	244.68	244.91	PSS1/EM1B	FLAT - ORGANIC	II C 2, III A 2	WETLAND	1204	1204							0.23			
2	C	4	244.91	244.91	PSS1/EM1B	SLOPE	II C 2, III A 2	WETLAND	19	19							0.00			
2	C	4	244.91	245.17	PSS1/EM1B	FLAT - ORGANIC	II C 2, III A 2	WETLAND	1346	1346							0.25			
2	C	4	245.17	245.24	PSS4/1B	FLAT - ORGANIC	I A 2, II C 2	WETLAND	373	373							0.07			
2	C	4	245.24	245.34	PSS1/EM1B	FLAT - ORGANIC	II C 2, III A 2	WETLAND	525	525							0.10			
2	C	4	245.34	245.35	PSS1/4B	FLAT - ORGANIC	II A 3, II C 2	WETLAND	60	60							0.01			
2	C	4	245.35	245.36	PSS1/EM1B	FLAT - ORGANIC	II C 2, III A 2	WETLAND	52	52							0.01			
2	C	4	245.36	245.44	PSS1/4B	FLAT - ORGANIC	II A 3, II C 2	WETLAND	449	449							0.08			
2	C	4	245.44	245.45	PSS1/EM1B	FLAT - ORGANIC	II C 2, III A 2	WETLAND	45	45							0.01			
2	C	4	245.45	245.48	PSS1/4B	FLAT - ORGANIC	II A 3, II C 2	WETLAND	129	129							0.02			
2	C	4	245.48	245.98	PSS4/1B	FLAT - ORGANIC	II A 2, II C 2	WETLAND	2654	2654							0.50			
2	C	4	245.98	246.02	U	N/A	I C 2	UPLAND	213		213						0.04			
2	C	4	246.02	246.07	PSS4/1B	FLAT - ORGANIC	II A 2, II C 2	WETLAND	289	289							0.05			
2	C	4	246.07	246.10	U	N/A	I C 2	UPLAND	162		162						0.03			
2	C	4	246.10	246.13	PSS4/1B	FLAT - ORGANIC	II A 2, II C 2	WETLAND	136	136							0.03			
2	C	4	246.13	246.16	U	N/A	I C 2	UPLAND	150		150						0.03			
2	C	4	246.16	246.17	PSS4/1B	SLOPE	II A 2, II C 2	WETLAND	67	67							0.01			
2	C	4	246.17	246.20	PSS1E	SLOPE	II C 2	WETLAND	146	146							0.03			
2	C	4	246.20	246.20	PSS1A	RIVERINE	II B 1	WETLAND	17	17							0.00			
2	C	WB-W	246.20	246.21	PSS1A	RIVERINE	II B 1	WETLAND	32	32										0.01
2	C	WB-W	246.21	246.21	R3UBH	RIVERINE	NONE	WETLAND	23	23										0.00
2	C	WB-W	246.21	246.23	PSS1A	RIVERINE	II B 1	WETLAND	95	95										0.02
2	C	WB-W	246.23	246.24	PSS1B	SLOPE	II C 2	WETLAND	30	30										0.01
2	C	4	246.24	246.24	PSS1B	SLOPE	II C 2	WETLAND	32	32							0.01			
2	C	4	246.24	246.25	U	N/A	I C 2	UPLAND	55		55						0.01			
2	C	4	246.25	246.59	PSS4/1B	FLAT - ORGANIC	II A 2, II C 2	WETLAND	1785	1785							0.34			
2	C	4	246.59	246.60	PSS1/4B	SLOPE	II A 3, II C 2	WETLAND	49	49							0.01			
2	C	4	246.60	246.62	PSS4/1B	FLAT - ORGANIC	II A 2, II C 2	WETLAND	104	104							0.02			
2	C	4	246.62	246.62	U	N/A	I C 2	UPLAND	14		14						0.00			
2	C	WB-W	246.62	246.64	U	N/A	I C 2	UPLAND	90		90									0.02
2	C	4	246.64	246.65	U	N/A	I C 2	UPLAND	51		51						0.01			
2	C	4	246.65	246.77	PSS4/1B	FLAT - ORGANIC	II A 2, II C 2	WETLAND	626	626							0.12			
2	C	4	246.77	246.78	U	N/A	I C 2	UPLAND	43		43						0.01			
2	C	WB-W	246.78	246.78	U	N/A	I C 2	UPLAND	39		39									0.01
2	C	WB-W	246.78	246.79	PSS1/4B	SLOPE	II A 3, II C 2	WETLAND	21	21										0.00
2	C	4	246.79	246.80	PSS1/4B	SLOPE	II A 3, II C 2	WETLAND	78	78							0.01			
2	C	4	246.80	246.84	PSS4/1B	FLAT - ORGANIC	II A 2, II C 2	WETLAND	214	214							0.04			
2	C	4	246.84	246.85	PSS1/4B	SLOPE	II A 3, II C 2	WETLAND	40	40							0.01			
2	C	4	246.85	246.95	PSS4/1B	FLAT - ORGANIC	II A 2, II C 2	WETLAND	512	512							0.10			
2	C	4	246.95	247.02	PSS4B	FLAT - ORGANIC	II A 2	WETLAND	363	363							0.07			
2	C	4	247.02	247.10	PSS4/1B	FLAT - ORGANIC	II A 2, II C 2	WETLAND	448	448							0.08			
2	C	4	247.10	247.17	PSS4B	FLAT - ORGANIC	II A 2	WETLAND	388	388							0.07			
2	C	4	247.17	247.19	PSS1/4B	SLOPE	I A 3, II C 2	WETLAND	73	73							0.01			
2	C	4	247.19	247.28	PSS4B	FLAT - ORGANIC	II A 2	WETLAND	473	473							0.09			
2	C	4	247.28	247.32	PSS1/4B	SLOPE	I A 3, II C 2	WETLAND	206	206							0.04			
2	C	4	247.32	247.32	PSS4/1B	FLAT - ORGANIC	II A 2, II C 2	WETLAND	35	35							0.01			
2	C	4	247.32	247.33	PSS1/4B	SLOPE	I A 3, II C 2	WETLAND	50	50							0.01			
2	C	4	247.33	247.37	PSS4B	FLAT - ORGANIC	II A 2	WETLAND	207	207							0.04			
2	C	4	247.37	247.40	PSS4/1B	FLAT - ORGANIC	II A 2, II C 2	WETLAND	171	171							0.03			
2	C	4	247.40	247.41	PSS1/4B	SLOPE	I A 3, II C 2	WETLAND	40	40							0.01			
2	C	4	247.41	247.44	PSS4/1B	FLAT - ORGANIC	II A 2, II C 2	WETLAND	156	156							0.03			
2	C	4	247.44	247.45	PSS1/4B	SLOPE	I A 3, II C 2	WETLAND	31	31							0.01			
2	C	4	247.45	247.69	PSS4/1B	FLAT - ORGANIC	II A 2, II C 2	WETLAND	1295	1295							0.25			
2	C	4	247.69	247.71	PSS1/4B	SLOPE	I A 3, II C 2	WETLAND	66	66							0.01			
2	C	4	247.71	247.73	PSS4/1B	FLAT - ORGANIC	II A 2, II C 2	WETLAND	135	135							0.03			
2	C	4	247.73	247.74	PSS1/4B	SLOPE	I A 3, II C 2	WETLAND	41	41							0.01			
2	C	4	247.74	247.77	PSS4/1B	FLAT - ORGANIC	II A 2, II C 2	WETLAND	153	153							0.03			
2	C	4	247.77	247.80	PSS1/4B	SLOPE	I A 3, II C 2	WETLAND	174	174							0.03			

SPREAD	SECTION	ROW MODE	FROM MP	TO MP	NWI CODE	HGM CLASS	VIERECK	DESCRIPTION	LINEAR FEET	WETLAND FEET	UPLAND FEET	DISTURBED FEET	Comments	Mode 1 - Ice Workpad (miles)	Mode 2 - Frost Pack (miles)	Mode 3 - Timber Mats	Mode 4 - Granular Workpad	Mode 5A - Grade	Mode 5B - Mountain Grade	Stream & Flood Plain Crossings
2	C	4	247.80	247.84	PSS4/1B	FLAT - ORGANIC	II A 2, II C 2	WETLAND	216	216							0.04			
2	C	4	247.84	247.85	U	N/A	I C 1	UPLAND	45		45						0.01			
2	C	WB-W	247.85	247.86	U	N/A	I C 1	UPLAND	62		62									0.01
2	C	WB-W	247.86	247.87	U	N/A	I A 2	UPLAND	28		28									0.01
2	C	4	247.87	247.87	U	N/A	I A 2	UPLAND	14		14						0.00			
2	C	4	247.87	247.94	PSS4/1B	FLAT - ORGANIC	II A 2, II C 2	WETLAND	380	380							0.07			
2	C	4	247.94	247.96	U	N/A	I C 2	UPLAND	111		111						0.02			
2	C	4	247.96	247.99	PSS4/1B	FLAT - ORGANIC	II A 2, II C 2	WETLAND	158	158							0.03			
2	C	4	247.99	248.00	U	N/A	I C 1	UPLAND	16		16						0.00			
2	C	4	248.00	248.01	PSS4/1B	FLAT - ORGANIC	II A 2, II C 2	WETLAND	63	63							0.01			
2	C	4	248.01	248.04	U	N/A	I C 1	UPLAND	158		158						0.03			
2	C	WB-W	248.04	248.05	U	N/A	I C 1	UPLAND	60		60									0.01
2	C	4	248.05	248.07	U	N/A	I C 1	UPLAND	109		109						0.02			
2	C	4	248.07	248.12	U	N/A	I A 2	UPLAND	262		262						0.05			
2	C	4	248.12	248.14	PSS1/4B	FLAT - ORGANIC	II C 2, II A 2	WETLAND	120	120							0.02			
2	C	4	248.14	248.15	U	N/A	I A 2	UPLAND	42		42						0.01			
2	C	4	248.15	248.18	U	N/A	I C 1	UPLAND	150		150						0.03			
2	C	4	248.18	248.21	PSS4/1B	SLOPE	II A 2, II C 2	WETLAND	146	146							0.03			
2	C	4	248.21	248.21	U	N/A	I C 1	UPLAND	41		41						0.01			
2	C	WB-W	248.21	248.22	U	N/A	I C 1	UPLAND	60		60									0.01
2	C	4	248.22	248.25	U	N/A	I C 1	UPLAND	124		124						0.02			
2	C	4	248.25	248.45	PSS1/4B	FLAT - ORGANIC	II C 2, II A 2	WETLAND	1051	1051							0.20			
2	C	4	248.45	248.46	PSS1B	SLOPE	II C 2	WETLAND	46	46							0.01			
2	C	4	248.46	248.49	PSS1/4B	FLAT - ORGANIC	II C 2, II A 2	WETLAND	167	167							0.03			
2	C	4	248.49	248.58	U	N/A	I A 2	UPLAND	509		509						0.10			
2	C	4	248.58	248.60	PSS1/4B	FLAT - ORGANIC	II C 2, II A 2	WETLAND	84	84							0.02			
2	C	4	248.60	248.64	U	N/A	I A 2	UPLAND	209		209						0.04			
2	C	4	248.64	248.65	PSS1/4B	SLOPE	II C 2, II A 2	WETLAND	32	32							0.01			
2	C	4	248.65	248.80	PSS1/EM1C	SLOPE	II C 2, III A 2	WETLAND	807	807							0.15			
2	C	5A	248.80	248.89	PSS1/EM1C	SLOPE	II C 2, III A 2	WETLAND	500	500								0.09		
2	C	5A	248.89	248.90	PSS1/EM1B	SLOPE	II C 2, III A 2	WETLAND	38	38								0.01		
2	C	5A	248.90	249.00	PSS1/EM1B	SLOPE	II C 2, III A 2	WETLAND	510	510								0.10		
2	C	5A	249.00	249.20	PFO4/SS4B	FLAT - ORGANIC	I A 2, II C 2	WETLAND	1067	1067								0.20		
2	C	5A	249.20	249.20	PSS1/4B	SLOPE	II B 2, I A 3	WETLAND	15	15								0.00		
2	C	WB-W	249.20	249.20	PSS1/4B	SLOPE	II B 2, I A 3	WETLAND	9	9										0.00
2	C	WB-W	249.20	249.20	R4SB	RIVERINE	NONE	WETLAND	5	5										0.00
2	C	WB-W	249.20	249.21	PSS1/EM1C	SLOPE	II C 2, III A 3	WETLAND	19	19										0.00
2	C	WB-W	249.21	249.21	U	N/A	I A 2, II B 2	UPLAND	27		27									0.01
2	C	5A	249.21	249.24	U	N/A	I A 2, II B 2	UPLAND	120		120							0.02		
2	C	WB-W	249.24	249.24	U	N/A	I A 2, II B 2	UPLAND	23		23									0.00
2	C	WB-W	249.24	249.24	R4SB	RIVERINE	NONE	WETLAND	14	14										0.00
2	C	WB-W	249.24	249.25	PSS1/4B	SLOPE	II B 2, I A 3	WETLAND	23	23										0.00
2	C	4	249.25	249.27	PSS1/4B	SLOPE	II B 2, I A 3	WETLAND	121	121							0.02			
2	C	4	249.27	249.28	R4SB	RIVERINE	NONE	WETLAND	47	47							0.01			
2	C	4	249.28	249.28	PSS1C	RIVERINE	II B 2	WETLAND	22	22							0.00			
2	C	4	249.28	249.29	R4SB	RIVERINE	NONE	WETLAND	41	41							0.01			
2	C	4	249.29	249.41	PSS1/4B	SLOPE	II B 2, I A 3	WETLAND	609	609							0.12			
2	C	WB-W	249.41	249.41	PSS1/4B	SLOPE	II B 2, I A 3	WETLAND	39	39										0.01
2	C	WB-W	249.41	249.42	U	N/A	I C 2, II B 2	UPLAND	51		51									0.01
2	C	4	249.42	249.42	U	N/A	I C 2, II B 2	UPLAND	8		8						0.00			
2	C	4	249.42	249.44	PSS1/4B	FLAT - ORGANIC	II C 2, I A 3	WETLAND	56	56							0.01			
2	C	4	249.44	249.45	U	N/A	I C 2	UPLAND	80		80						0.02			
2	C	4	249.45	249.47	PSS1/4B	FLAT - ORGANIC	II C 2, I A 3	WETLAND	96	96							0.02			
2	C	4	249.47	249.49	U	N/A	I C 2	UPLAND	137		137						0.03			
2	C	4	249.49	249.58	PSS1/4B	FLAT - ORGANIC	II C 2, I A 3	WETLAND	452	452							0.09			
2	C	4	249.58	249.59	U	N/A	I C 2	UPLAND	39		39						0.01			
2	C	4	249.59	249.59	PSS1/4B	FLAT - ORGANIC	II C 2, I A 3	WETLAND	26	26							0.00			
2	C	4	249.59	249.60	U	N/A	I C 2	UPLAND	25		25						0.00			
2	C	4	249.60	249.63	PSS1/4B	FLAT - ORGANIC	II C 2, II A 2	WETLAND	148	148							0.03			
2	C	4	249.63	249.67	PSS1/4B	FLAT - ORGANIC	II C 2, I A 3	WETLAND	261	261							0.05			
2	C	4	249.67	249.73	PSS1/4B	FLAT - ORGANIC	II C 2, II A 2	WETLAND	292	292							0.06			
2	C	4	249.73	249.77	PSS1/4B	FLAT - ORGANIC	I A 3, I B 2	WETLAND	210	210							0.04			
2	C	4	249.77	249.84	PSS1/4B	FLAT - ORGANIC	II C 2, II A 2	WETLAND	356	356							0.07			
2	C	4	249.84	249.95	PSS1B	FLAT - ORGANIC	II C 2, II A 2	WETLAND	606	606							0.11			
2	C	4	249.95	249.96	PSS1/4B	SLOPE	II C 2, II A 3	WETLAND	55	55							0.01			
2	C	4	249.96	250.00	PSS1B	FLAT - ORGANIC	II C 2, II A 2	WETLAND	215	215							0.04			
2	C	4	250.00	250.02	PSS1/4B	FLAT - ORGANIC	II C 2, I A 3	WETLAND	112	112							0.02			
2	C	4	250.02	250.06	PSS1B	FLAT - ORGANIC	II C 2, II A 2	WETLAND	185	185							0.03			
2	C	4	250.06	250.08	PSS1/4B	FLAT - ORGANIC	II C 2, I A 3	WETLAND	112	112							0.02			
2	C	4	250.08	250.11	PSS1B	FLAT - ORGANIC	II C 2, II A 2	WETLAND	162	162							0.03			
2	C	4	250.11	250.15	PSS1/4B	FLAT - ORGANIC	II C 2, I A 3	WETLAND	218	218							0.04			
2	C	4	250.15	250.16	PSS1/4B	SLOPE	II C 2, I A 3	WETLAND	48	48							0.01			

SPREAD	SECTION	ROW MODE	FROM MP	TO MP	NWI CODE	HGM CLASS	VIERECK	DESCRIPTION	LINEAR FEET	WETLAND FEET	UPLAND FEET	DISTURBED FEET	Comments	Mode 1 - Ice Workpad (miles)	Mode 2 - Frost Pack (miles)	Mode 3 - Timber Mats	Mode 4 - Granular Workpad	Mode 5A - Grade	Mode 5B - Mountain Grade	Stream & Flood Plain Crossings
2	C	4	250.16	250.29	PSS1B	FLAT - ORGANIC	II C 2, II A 2	WETLAND	693	693							0.13			
2	C	4	250.29	250.32	U	N/A	I C 2, II B 2	UPLAND	162		162						0.03			
2	C	4	250.32	250.37	PSS1/EM1B	FLAT - ORGANIC	II C 2, III A 2	WETLAND	265	265							0.05			
2	C	4	250.37	250.38	PSS1/EM1B	SLOPE	II C 2, III A 2	WETLAND	50	50							0.01			
2	C	4	250.38	250.49	PSS1/EM1B	FLAT - ORGANIC	II C 2, III A 2	WETLAND	565	565							0.11			
2	C	4	250.49	250.51	PSS1/EM1B	SLOPE	II C 2, III A 2	WETLAND	124	124							0.02			
2	C	4	250.51	250.55	PSS1/EM1B	FLAT - ORGANIC	II C 2, III A 2	WETLAND	165	165							0.03			
2	C	4	250.55	250.58	U	N/A	I C 1	UPLAND	172		172						0.03			
2	C	4	250.58	250.61	PSS1/EM1B	FLAT - ORGANIC	II C 2, III A 2	WETLAND	188	188							0.04			
2	C	4	250.61	250.63	U	N/A	I C 3, II B 2	UPLAND	63		63						0.01			
2	C	4	250.63	250.63	PSS1/EM1B	FLAT - ORGANIC	II C 2, III A 2	WETLAND	2	2							0.00			
2	C	4	250.63	250.63	PSS1A	RIVERINE	II B 2	WETLAND	13	13							0.00			
2	C	WB-W	250.63	250.63	PSS1A	RIVERINE	II B 2	WETLAND	2	2										0.00
2	C	WB-W	250.63	250.64	U	N/A	I C 3, II B 2	UPLAND	58		58									0.01
2	C	4	250.64	250.65	U	N/A	I C 3, II B 2	UPLAND	44		44						0.01			
2	C	4	250.65	250.74	PSS1/EM1B	FLAT - ORGANIC	II C 2, III A 2	WETLAND	511	511							0.10			
2	C	4	250.74	250.77	U	N/A	I C 1	UPLAND	129		129						0.02			
2	C	4	250.77	250.79	PSS1/EM1B	FLAT - ORGANIC	II C 2, III A 2	WETLAND	137	137							0.03			
2	C	4	250.79	250.82	U	N/A	I C 1	UPLAND	124		124						0.02			
2	C	4	250.82	250.83	PSS1/EM1B	FLAT - ORGANIC	II C 2, III A 2	WETLAND	77	77							0.01			
2	C	4	250.83	250.85	U	N/A	I C 1	UPLAND	88		88						0.02			
2	C	4	250.85	250.85	PSS1/EM1B	SLOPE	II C 2, III A 2	WETLAND	15	15							0.00			
2	C	4	250.85	250.92	U	N/A	I C 1	UPLAND	353		353						0.07			
2	C	4	250.92	250.94	PSS1/EM1B	FLAT - ORGANIC	II C 2, III A 2	WETLAND	102	102							0.02			
2	C	4	250.94	250.98	U	N/A	I C 2	UPLAND	221		221						0.04			
2	C	4	250.98	250.99	PSS1/EM1B	FLAT - ORGANIC	II C 2, III A 2	WETLAND	77	77							0.01			
2	C	4	250.99	251.00	U	N/A	I A 2	UPLAND	34		34						0.01			
2	C	4	251.00	251.02	PSS1/EM1B	FLAT - ORGANIC	II C 2, III A 2	WETLAND	81	81							0.02			
2	C	4	251.02	251.15	U	N/A	I A 2	UPLAND	685		685						0.13			
2	C	4	251.15	251.16	PSS1/EM1B	FLAT - ORGANIC	II C 2, III A 2	WETLAND	68	68							0.01			
2	C	4	251.16	251.20	U	N/A	I A 2	UPLAND	198		198						0.04			
2	C	4	251.20	251.21	PSS1/EM1B	FLAT - ORGANIC	II C 2, III A 2	WETLAND	78	78							0.01			
2	C	4	251.21	251.22	U	N/A	I A 2	UPLAND	22		22						0.00			
2	C	4	251.22	251.22	D	N/A	NONE	DISTURBED	31			31					0.01			
2	C	4	251.22	251.22	D	N/A	NONE	DISTURBED	10			10					0.00			
2	C	4	251.22	251.23	U	N/A	II B 2	UPLAND	28		28						0.01			
2	D	4	251.23	251.26	PSS4/1B	FLAT - ORGANIC	II A 2, II C 2	WETLAND	143	143							0.03			
2	D	4	251.26	251.29	PSS4B	FLAT - ORGANIC	II A 2	WETLAND	194	194							0.04			
2	D	4	251.29	251.37	PSS1/EM1B	FLAT - ORGANIC	II C 2, II A 2	WETLAND	414	414							0.08			
2	D	4	251.37	251.40	PSS1/EM1E	SLOPE	II C 2, III A 2	WETLAND	154	154							0.03			
2	D	4	251.40	251.48	PSS1/EM1B	FLAT - ORGANIC	II C 2, III A 2	WETLAND	414	414							0.08			
2	D	4	251.48	251.48	PSS1/EM1B	FLAT - ORGANIC	II C 2, II A 2	WETLAND	1	1							0.00			
2	D	4	251.48	251.62	PSS1/EM1B	FLAT - ORGANIC	II C 2, II A 2	WETLAND	749	749							0.14			
2	D	4	251.62	251.64	PEM1/SS1E	DEPRESSIONAL	III A 2, II C 2	WETLAND	80	80							0.02			
2	D	4	251.64	251.66	PSS1/4B	FLAT - ORGANIC	II C 2, II A 3	WETLAND	131	131							0.02			
2	D	4	251.66	251.90	PSS1/EM1B	FLAT - ORGANIC	II C 2, III A 2	WETLAND	1277	1277							0.24			
2	D	4	251.90	251.92	PSS4/1B	FLAT - ORGANIC	II A 2, II C 2	WETLAND	88	88							0.02			
2	D	4	251.92	251.93	U	N/A	II C 2	UPLAND	48		48						0.01			
2	D	4	251.93	252.00	PSS4/1B	FLAT - ORGANIC	II A 2, II C 2	WETLAND	389	389							0.07			
2	D	4	252.00	252.01	PSS1/EM1E	RIVERINE	II C 2, III A 2	WETLAND	36	36							0.01			
2	D	WB-S	252.01	252.01	PSS1/EM1E	RIVERINE	II C 2, III A 2	WETLAND	30	30										0.01
2	D	WB-S	252.01	252.02	PSS1/EM1B	FLAT - ORGANIC	II C 2, III A 2	WETLAND	30	30										0.01
2	D	4	252.02	252.03	PSS1/EM1B	FLAT - ORGANIC	II C 2, III A 2	WETLAND	34	34							0.01			
2	D	4	252.03	252.07	PSS4/1B	FLAT - ORGANIC	II A 2, II C 2	WETLAND	228	228							0.04			
2	D	4	252.07	252.07	PSS1/EM1B	FLAT - ORGANIC	II C 2, III A 2	WETLAND	12	12							0.00			
2	D	4	252.07	252.09	PSS4/1B	FLAT - ORGANIC	II A 2, II C 2	WETLAND	84	84							0.02			
2	D	4	252.09	252.20	PSS1/EM1B	FLAT - ORGANIC	II C 2, III A 2	WETLAND	579	579							0.11			
2	D	4	252.20	252.21	D	N/A	NONE	DISTURBED	78			78					0.01			
2	D	4	252.21	252.26	PSS4B	FLAT - ORGANIC	II A 3	WETLAND	269	269							0.05			
2	D	4	252.26	252.27	D	N/A	NONE	DISTURBED	49			49					0.01			
2	D	4	252.27	252.28	PSS4/1B	FLAT - ORGANIC	II A 2, II C 2	WETLAND	59	59							0.01			
2	D	4	252.28	252.32	U	N/A	I C 2	UPLAND	189		189						0.04			
2	D	4	252.32	252.34	PSS1/EM1B	FLAT - ORGANIC	II C 2, III A 2	WETLAND	98	98							0.02			
2	D	4	252.34	252.34	U	N/A	I C 2	UPLAND	26		26						0.00			
2	D	4	252.34	252.37	PSS1/EM1B	FLAT - ORGANIC	II C 2, III A 2	WETLAND	150	150							0.03			
2	D	4	252.37	252.38	U	N/A	I C 2	UPLAND	55		55						0.01			
2	D	4	252.38	252.38	PSS1/EM1B	FLAT - ORGANIC	II C 2, III A 2	WETLAND	9	9							0.00			
2	D	4	252.38	252.40	U	N/A	I C 2	UPLAND	77		77						0.01			
2	D	4	252.40	252.41	PSS1/EM1B	FLAT - ORGANIC	II C 2, III A 2	WETLAND	59	59							0.01			
2	D	4	252.41	252.46	U	N/A	I C 2	UPLAND	282		282						0.05			
2	D	4	252.46	252.47	PSS1/4B	FLAT - ORGANIC	II C 2, II A 2	WETLAND	45	45							0.01			
2	D	4	252.47	252.61	PSS1/EM1C	FLAT - ORGANIC	II C 2, III A 2	WETLAND	726	726							0.14			

SPREAD	SECTION	ROW MODE	FROM MP	TO MP	NWI CODE	HGM CLASS	VIERECK	DESCRIPTION	LINEAR FEET	WETLAND FEET	UPLAND FEET	DISTURBED FEET	Comments	Mode 1 - Ice Workpad (miles)	Mode 2 - Frost Pack (miles)	Mode 3 - Timber Mats	Mode 4 - Granular Workpad	Mode 5A - Grade	Mode 5B - Mountain Grade	Stream & Flood Plain Crossings
2	D	4	252.61	252.63	PSS1/EM1B	FLAT - ORGANIC	II C 2, III A 2	WETLAND	117	117							0.02			
2	D	4	252.63	252.66	U	N/A	I C 3, II D 2	UPLAND	144		144						0.03			
2	D	4	252.66	252.79	PSS1/EM1B	FLAT - ORGANIC	II C 2, III A 2	WETLAND	677	677							0.13			
2	D	4	252.79	252.81	PSS4/1B	FLAT - ORGANIC	II A 2, II C 2	WETLAND	147	147							0.03			
2	D	4	252.81	252.84	U	N/A	I C 2, II C 2	UPLAND	124		124						0.02			
2	D	4	252.84	252.87	PSS4/1B	FLAT - ORGANIC	II A 2, II C 2	WETLAND	185	185							0.04			
2	D	4	252.87	252.95	PSS1/EM1B	FLAT - ORGANIC	II C 2, III A 2	WETLAND	391	391							0.07			
2	D	4	252.95	253.03	PSS4/1B	FLAT - ORGANIC	II A 2, II C 2	WETLAND	423	423							0.08			
2	D	4	253.03	253.03	PSS1/EM1B	FLAT - ORGANIC	II C 2, III A 2	WETLAND	41	41							0.01			
2	D	4	253.03	253.04	PSS4/1B	FLAT - ORGANIC	II A 2, II C 2	WETLAND	55	55							0.01			
2	D	4	253.04	253.19	PSS1/EM1B	FLAT - ORGANIC	II C 2, III A 2	WETLAND	768	768							0.15			
2	D	4	253.19	253.20	U	N/A	II C 2	UPLAND	75		75						0.01			
2	D	4	253.20	253.22	D	N/A	NONE	DISTURBED	106			106					0.02			
2	D	4	253.22	253.24	U	N/A	II C 2	UPLAND	92		92						0.02			
2	D	4	253.24	253.28	PSS4/1B	FLAT - ORGANIC	II A 2, II C 2	WETLAND	218	218							0.04			
2	D	4	253.28	253.34	PSS1/EM1B	SLOPE	II C 2, III A 2	WETLAND	309	309							0.06			
2	D	4	253.34	253.35	PSS1/4B	SLOPE	II C 2, II A 2	WETLAND	62	62							0.01			
2	D	4	253.35	253.40	PSS1/EM1B	SLOPE	II C 2, III A 2	WETLAND	261	261							0.05			
2	D	4	253.40	253.42	PSS1/4B	SLOPE	II C 2, II A 2	WETLAND	70	70							0.01			
2	D	4	253.42	253.43	PSS1/EM1B	SLOPE	II C 2, III A 2	WETLAND	66	66							0.01			
2	D	4	253.43	253.43	PEM1F	SLOPE	III A 3	WETLAND	27	27							0.01			
2	D	4	253.43	253.46	PSS1/EM1B	FLAT - ORGANIC	II C 2, III A 2	WETLAND	124	124							0.02			
2	D	WB-S	253.46	253.46	PSS1/EM1B	FLAT - ORGANIC	II C 2, III A 2	WETLAND	13	13										0.00
2	D	WB-S	253.46	253.46	PEM1F	RIVERINE	III A 3	WETLAND	24	24										0.00
2	D	WB-S	253.46	253.47	PSS1/EM1C	FLAT - ORGANIC	II C 2, III A 2	WETLAND	24	24										0.00
2	D	4	253.47	253.54	PSS1/EM1C	FLAT - ORGANIC	II C 2, III A 2	WETLAND	356	356							0.07			
2	D	4	253.54	253.71	PSS4/1B	FLAT - ORGANIC	II A 2, II C 2	WETLAND	920	920							0.17			
2	D	4	253.71	253.75	U	N/A	II C 2	UPLAND	186		186						0.04			
2	D	4	253.75	254.02	PSS1/EM1B	FLAT - ORGANIC	II C 2, III A 2	WETLAND	1468	1468							0.28			
2	D	4	254.02	254.05	U	N/A	I A 2	UPLAND	118		118						0.02			
2	D	4	254.05	254.09	PSS1/EM1B	FLAT - ORGANIC	II C 2, III A 2	WETLAND	215	215							0.04			
2	D	4	254.09	254.12	PSS1/EM1C	FLAT - ORGANIC	II C 2, III A 2	WETLAND	165	165							0.03			
2	D	4	254.12	254.14	PSS1/4B	FLAT - ORGANIC	II C 2, II A 2	WETLAND	104	104							0.02			
2	D	4	254.14	254.16	PSS1/EM1C	FLAT - ORGANIC	II C 2, III A 2	WETLAND	97	97							0.02			
2	D	4	254.16	254.18	PSS4/1B	FLAT - ORGANIC	II A 2, II C 2	WETLAND	109	109							0.02			
2	D	4	254.18	254.22	U	N/A	I A 3, II B 2	UPLAND	219		219						0.04			
2	D	4	254.22	254.25	PSS4/1B	FLAT - ORGANIC	II A 2, II C 2	WETLAND	151	151							0.03			
2	D	4	254.25	254.27	PSS1/EM1C	FLAT - ORGANIC	II C 2, III A 2	WETLAND	146	146							0.03			
2	D	4	254.27	254.34	PSS4/1B	FLAT - ORGANIC	II A 2, II C 2	WETLAND	345	345							0.07			
2	D	4	254.34	254.38	PSS1/3B	FLAT - ORGANIC	II C 2	WETLAND	193	193							0.04			
2	D	4	254.38	254.41	PSS1/EM1B	FLAT - ORGANIC	II C 2, III A 2	WETLAND	188	188							0.04			
2	D	WB-S	254.41	254.41	PSS1/EM1B	FLAT - ORGANIC	II C 2, III A 2	WETLAND	15	15										0.00
2	D	WB-S	254.41	254.42	PSS1/EM1C	RIVERINE	II B 2, III A 2	WETLAND	15	15										0.00
2	D	WB-S	254.42	254.42	PUBH	RIVERINE	NONE	WETLAND	18	18										0.00
2	D	WB-S	254.42	254.42	PSS1/EM1C	RIVERINE	II B 2, III A 2	WETLAND	10	10										0.00
2	D	WB-S	254.42	254.43	PSS1/EM1B	FLAT - ORGANIC	II C 2, III A 2	WETLAND	32	32										0.01
2	D	4	254.43	254.45	PSS1/EM1B	FLAT - ORGANIC	II C 2, III A 2	WETLAND	132	132							0.03			
2	D	4	254.45	254.60	PSS4/1B	FLAT - ORGANIC	II A 2, II C 2	WETLAND	762	762							0.14			
2	D	4	254.60	254.66	PSS1B	FLAT - ORGANIC	II C 2	WETLAND	335	335							0.06			
2	D	4	254.66	254.69	PSS1/4B	DEPRESSIONAL	II A 3, II C 2	WETLAND	136	136							0.03			
2	D	4	254.69	254.71	PEM1/SS1B	FLAT - ORGANIC	III A 2, II C 2	WETLAND	129	129							0.02			
2	D	4	254.71	254.84	PSS4/1B	FLAT - ORGANIC	II A 2, II C 2	WETLAND	662	662							0.13			
2	D	4	254.84	254.84	PSS1/4B	FLAT - ORGANIC	II C 2, II A 3	WETLAND	27	27							0.01			
2	D	4	254.84	254.86	PSS4/1B	FLAT - ORGANIC	II A 2, II C 2	WETLAND	86	86							0.02			
2	D	4	254.86	254.86	PSS1/4B	FLAT - ORGANIC	II C 2, II A 3	WETLAND	1	1							0.00			
2	D	4	254.86	254.97	PSS4/1B	FLAT - ORGANIC	II A 2, II C 2	WETLAND	599	599							0.11			
2	D	4	254.97	255.02	PEM1/SS1C	SLOPE	III A 2, II C 2	WETLAND	248	248							0.05			
2	D	4	255.02	255.03	PEM1F	RIVERINE	III A 3	WETLAND	32	32							0.01			
2	D	WB-S	255.03	255.03	PEM1F	RIVERINE	III A 3	WETLAND	44	44										0.01
2	D	WB-S	255.03	255.04	PEM1/SS1B	SLOPE	III A 2, II C 2	WETLAND	16	16										0.00
2	D	4	255.04	255.09	PEM1/SS1B	SLOPE	III A 2, II C 2	WETLAND	259	259							0.05			
2	D	4	255.09	255.16	PSS4/1B	FLAT - ORGANIC	II A 2, II C 2	WETLAND	384	384							0.07			
2	D	4	255.16	255.16	U	N/A	I A 3, II D 2	UPLAND	22		22						0.00			
2	D	4	255.16	255.18	PSS4/1B	FLAT - ORGANIC	II A 2, II C 2	WETLAND	115	115							0.02			
2	D	4	255.18	255.25	U	N/A	I A 3, II D 2	UPLAND	351		351						0.07			
2	D	4	255.25	255.25	PSS4/1B	FLAT - ORGANIC	II A 2, II C 2	WETLAND	8	8							0.00			
2	D	4	255.25	255.32	PSS4/1B	FLAT - ORGANIC	II A 2, II C 2	WETLAND	360	360							0.07			
2	D	4	255.32	255.34	U	N/A	I A 3, III A 1	UPLAND	121		121						0.02			
2	D	4	255.34	255.40	PSS4/1B	FLAT - ORGANIC	II A 2, II C 2	WETLAND	305	305							0.06			
2	D	4	255.40	255.41	U	N/A	I C 3, II B 2	UPLAND	63		63						0.01			
2	D	4	255.41	255.42	D	N/A	NONE	DISTURBED	46			46					0.01			
2	D	4	255.42	255.43	U	N/A	II B 2	UPLAND	16		16						0.00			

SPREAD	SECTION	ROW MODE	FROM MP	TO MP	NWI CODE	HGM CLASS	VIERECK	DESCRIPTION	LINEAR FEET	WETLAND FEET	UPLAND FEET	DISTURBED FEET	Comments	Mode 1 - Ice Workpad (miles)	Mode 2 - Frost Pack (miles)	Mode 3 - Timber Mats	Mode 4 - Granular Workpad	Mode 5A - Grade	Mode 5B - Mountain Grade	Stream & Flood Plain Crossings
2	D	4	255.43	255.43	PSS1/EM1B	FLAT - ORGANIC	II C 2, III A 2	WETLAND	47	47							0.01			
2	D	4	255.43	255.48	U	N/A	II B 2, II D 2	UPLAND	243		243						0.05			
2	D	4	255.48	255.49	U	N/A	I A 3, II C 2	UPLAND	61		61						0.01			
2	D	4	255.49	255.53	PSS4/1B	FLAT - ORGANIC	II A 2, II C 2	WETLAND	214	214							0.04			
2	D	4	255.53	255.54	PSS1/4B	FLAT - ORGANIC	II A 3, II C 2	WETLAND	52	52							0.01			
2	D	4	255.54	255.58	PSS1/EM1E	SLOPE	II C 2, III A 2	WETLAND	180	180							0.03			
2	D	4	255.58	255.60	PSS1/4B	FLAT - ORGANIC	II A 3, II C 2	WETLAND	122	122							0.02			
2	D	4	255.60	255.63	PSS1/EM1E	SLOPE	II C 2, III A 2	WETLAND	141	141							0.03			
2	D	4	255.63	255.64	PEM1F	SLOPE	III A 3	WETLAND	53	53							0.01			
2	D	4	255.64	255.65	PSS1/EM1E	SLOPE	II C 2, III A 2	WETLAND	81	81							0.02			
2	D	4	255.65	255.66	PEM1F	SLOPE	III A 3	WETLAND	32	32							0.01			
2	D	4	255.66	255.69	PSS1/EM1E	SLOPE	II C 2, III A 2	WETLAND	173	173							0.03			
2	D	WB-S	255.69	255.70	PSS1/EM1E	SLOPE	II C 2, III A 2	WETLAND	60	60										0.01
2	D	4	255.70	255.71	PSS1/EM1E	SLOPE	II C 2, III A 2	WETLAND	48	48							0.01			
2	D	4	255.71	255.78	PSS1/4B	FLAT - ORGANIC	II C 2, II A 2	WETLAND	383	383							0.07			
2	D	4	255.78	255.86	PSS4/1B	FLAT - ORGANIC	II A 2, II C 2	WETLAND	431	431							0.08			
2	D	4	255.86	256.00	PSS1/EM1B	FLAT - ORGANIC	II C 2, III A 2	WETLAND	696	696							0.13			
2	D	4	256.00	256.08	PSS4/1B	FLAT - ORGANIC	II A 2, II C 2	WETLAND	455	455							0.09			
2	D	4	256.08	256.10	PSS1/EM1B	SLOPE	II C 2, III A 2	WETLAND	101	101							0.02			
2	D	4	256.10	256.26	PSS4/1B	FLAT - ORGANIC	II A 2, II C 2	WETLAND	839	839							0.16			
2	D	4	256.26	256.26	PSS1B	SLOPE	II C 2	WETLAND	15	15							0.00			
2	D	4	256.26	256.29	PSS1/EM1C	SLOPE	II C 2, III A 2	WETLAND	133	133							0.03			
2	D	4	256.29	256.64	PSS1/EM1B	FLAT - ORGANIC	II C 2, III A 2	WETLAND	1870	1870							0.35			
2	D	4	256.64	256.68	PSS1/EM1B	FLAT - ORGANIC	II C 2, III A 2	WETLAND	191	191							0.04			
2	D	4	256.68	256.84	PSS1/EM1B	FLAT - ORGANIC	II C 2, III A 2	WETLAND	875	875							0.17			
2	D	4	256.84	256.85	U	N/A	II C 2	UPLAND	40		40						0.01			
2	D	4	256.85	256.89	PSS1/EM1B	FLAT - ORGANIC	II C 2, III A 2	WETLAND	171	171							0.03			
2	D	4	256.89	256.95	U	N/A	II C 2	UPLAND	331		331						0.06			
2	D	4	256.95	257.00	PSS1/EM1B	FLAT - ORGANIC	II C 2, III A 2	WETLAND	274	274							0.05			
2	D	4	257.00	257.01	PSS1/EM1B	SLOPE	II C 2, III A 2	WETLAND	33	33							0.01			
2	D	4	257.01	257.33	PSS1/EM1B	FLAT - ORGANIC	II C 2, III A 2	WETLAND	1730	1730							0.33			
2	D	4	257.33	257.39	D	N/A	NONE	DISTURBED	280			280					0.05			
2	D	4	257.39	257.40	PSS1C	SLOPE	II C 2, II B 2	WETLAND	69	69							0.01			
2	D	4	257.40	257.42	PSS4/1B	FLAT - ORGANIC	II A 2, II B 2	WETLAND	127	127							0.02			
2	D	4	257.42	257.44	PSS1C	SLOPE	II C 2, II B 2	WETLAND	102	102							0.02			
2	D	4	257.44	257.56	PEM1/SS1B	FLAT - ORGANIC	II A 2, II D	WETLAND	625	625							0.12			
2	D	4	257.56	257.66	PEM1/SS1C	DEPRESSIONAL	III A 2, II C 2	WETLAND	516	516							0.10			
2	D	4	257.66	257.71	PSS1/EM1B	FLAT - ORGANIC	II C 2, III A 2	WETLAND	246	246							0.05			
2	D	4	257.71	257.78	PSS4/1B	FLAT - ORGANIC	II A 2, II C 2	WETLAND	381	381							0.07			
2	D	4	257.78	257.79	D	N/A	NONE	DISTURBED	60			60					0.01			
2	D	4	257.79	257.84	PSS4B	FLAT - ORGANIC	II A 2	WETLAND	264	264							0.05			
2	D	4	257.84	257.87	PSS4B	FLAT - ORGANIC	II A 2	WETLAND	177	177							0.03			
2	D	4	257.87	257.95	PSS1/EM1B	FLAT - ORGANIC	II C 2, III A 2	WETLAND	388	388							0.07			
2	D	4	257.95	257.95	PSS1/4B	FLAT - ORGANIC	II C 2, II A 3	WETLAND	39	39							0.01			
2	D	4	257.95	258.02	PSS1/EM1B	FLAT - ORGANIC	II C 2, III A 2	WETLAND	361	361							0.07			
2	D	4	258.02	258.26	PSS4/1B	FLAT - ORGANIC	II A 2, II C 2	WETLAND	1264	1264							0.24			
2	D	4	258.26	258.27	PSS1/4B	SLOPE	II C 2, I A 3	WETLAND	35	35							0.01			
2	D	4	258.27	258.29	PSS4/1B	FLAT - ORGANIC	II A 2, II C 2	WETLAND	139	139							0.03			
2	D	4	258.29	258.30	PSS1/4B	SLOPE	II C 2, I A 3	WETLAND	39	39							0.01			
2	D	4	258.30	258.40	PSS4/1B	FLAT - ORGANIC	II A 2, II C 2	WETLAND	510	510							0.10			
2	D	4	258.40	258.40	PSS1/4B	SLOPE	II C 2, I A 3	WETLAND	22	22							0.00			
2	D	4	258.40	258.66	PSS4/1B	FLAT - ORGANIC	II A 2, II C 2	WETLAND	1339	1339							0.25			
2	D	WB-S	258.66	258.66	PSS4/1B	FLAT - ORGANIC	II A 2, II C 2	WETLAND	7	7										0.00
2	D	WB-S	258.66	258.67	PSS1C	RIVERINE	II B 2, II C 2	WETLAND	53	53										0.01
2	D	4	258.67	258.68	PSS1C	RIVERINE	II B 2, II C 2	WETLAND	62	62							0.01			
2	D	4	258.68	258.69	PSS4/1B	FLAT - ORGANIC	II A 2, II C 2	WETLAND	36	36							0.01			
2	D	4	258.69	258.72	U	N/A	I A 3, II A 2	UPLAND	184		184						0.03			
2	D	4	258.72	258.73	PSS4/FO4B	FLAT - ORGANIC	II A 2, II C 2	WETLAND	35	35							0.01			
2	D	4	258.73	258.74	U	N/A	I A 3, II A 2	UPLAND	64		64						0.01			
2	D	4	258.74	258.76	PSS4/FO4B	FLAT - ORGANIC	II A 2, II C 2	WETLAND	128	128							0.02			
2	D	4	258.76	258.77	U	N/A	I A 3, II A 2	UPLAND	17		17						0.00			
2	D	4	258.77	258.80	PSS4/FO4B	FLAT - ORGANIC	II A 2, II C 2	WETLAND	161	161							0.03			
2	D	4	258.80	258.81	U	N/A	I A 3, II A 2	UPLAND	55		55						0.01			
2	D	4	258.81	258.84	PSS4/FO4B	FLAT - ORGANIC	II A 2, II C 2	WETLAND	148	148							0.03			
2	D	4	258.84	258.84	PSS4/1B	FLAT - ORGANIC	II A 2, II C 2	WETLAND	26	26							0.00			
2	D	4	258.84	258.85	PSS4/FO4B	FLAT - ORGANIC	II A 2, II C 2	WETLAND	27	27							0.01			
2	D	4	258.85	258.88	PSS4/1B	FLAT - ORGANIC	II A 2, II C 2	WETLAND	156	156							0.03			
2	D	4	258.88	258.89	U	N/A	I A 3, II A 2	UPLAND	58		58						0.01			
2	D	4	258.89	258.92	PSS4/1B	FLAT - ORGANIC	II A 2, II C 2	WETLAND	185	185							0.04			
2	D	4	258.92	258.95	U	N/A	I A 3, II A 2	UPLAND	160		160						0.03			
2	D	4	258.95	258.96	PSS4/1B	FLAT - ORGANIC	II A 2, II C 2	WETLAND	39	39							0.01			
2	D	4	258.96	259.03	U	N/A	I A 3, II A 2	UPLAND	350		350						0.07			

SPREAD	SECTION	ROW MODE	FROM MP	TO MP	NWI CODE	HGM CLASS	VIERECK	DESCRIPTION	LINEAR FEET	WETLAND FEET	UPLAND FEET	DISTURBED FEET	Comments	Mode 1 - Ice Workpad (miles)	Mode 2 - Frost Pack (miles)	Mode 3 - Timber Mats	Mode 4 - Granular Workpad	Mode 5A - Grade	Mode 5B - Mountain Grade	Stream & Flood Plain Crossings
2	D	4	259.03	259.05	PSS4/1B	FLAT - ORGANIC	II A 2, II C 2	WETLAND	133	133							0.03			
2	D	4	259.05	259.05	U	N/A	I A 3, II A 2	UPLAND	14		14						0.00			
2	D	4	259.05	259.07	PSS4/1B	FLAT - ORGANIC	II A 2, II C 2	WETLAND	103	103							0.02			
2	D	4	259.07	259.08	U	N/A	I A 3, II A 2	UPLAND	37		37						0.01			
2	D	4	259.08	259.09	U	N/A	II B 1	UPLAND	69		69						0.01			
2	D	4	259.09	259.10	PSS4/1B	FLAT - ORGANIC	II A 2, II C 2	WETLAND	35	35							0.01			
2	D	4	259.10	259.10	PSS4/1B	FLAT - ORGANIC	II A 2, II C 2	WETLAND	0	0							0.00			
2	D	4	259.10	259.11	U	N/A	I A 3, II A 2	UPLAND	28		28						0.01			
2	D	4	259.11	259.12	PSS4/1B	FLAT - ORGANIC	II A 2, II C 2	WETLAND	52	52							0.01			
2	D	4	259.12	259.13	U	N/A	I A 3, II A 2	UPLAND	73		73						0.01			
2	D	4	259.13	259.16	PSS4/1B	FLAT - ORGANIC	II A 2, II C 2	WETLAND	144	144							0.03			
2	D	4	259.16	259.18	U	N/A	I A 3, II A 2	UPLAND	139		139						0.03			
2	D	4	259.18	259.19	PSS4/1B	FLAT - ORGANIC	II A 2, II C 2	WETLAND	41	41							0.01			
2	D	4	259.19	259.20	U	N/A	I A 3, II A 2	UPLAND	44		44						0.01			
2	D	4	259.20	259.20	PSS4/1B	FLAT - ORGANIC	II A 2, II C 2	WETLAND	31	31							0.01			
2	D	4	259.20	259.22	U	N/A	I A 3, II A 2	UPLAND	64		64						0.01			
2	D	4	259.22	259.22	U	N/A	I C 2	UPLAND	39		39						0.01			
2	D	WB-S	259.22	259.23	U	N/A	I C 2	UPLAND	39		39									0.01
2	D	WB-S	259.23	259.24	U	N/A	I A 2, II B 2	UPLAND	21		21									0.00
2	D	4	259.24	259.28	U	N/A	I A 2, II B 2	UPLAND	213		213						0.04			
2	D	4	259.28	259.30	PSS4/1B	FLAT - ORGANIC	II A 2, II C 2	WETLAND	112	112							0.02			
2	D	4	259.30	259.30	U	N/A	I A 2, II B 2	UPLAND	38		38						0.01			
2	D	4	259.30	259.34	PSS4/1B	FLAT - ORGANIC	II A 2, II C 2	WETLAND	213	213							0.04			
2	D	4	259.34	259.39	U	N/A	I A 3, II A 2	UPLAND	236		236						0.04			
2	D	4	259.39	259.41	U	N/A	I A 3, II A 2	UPLAND	124		124						0.02			
2	D	4	259.41	259.44	U	N/A	I C 2, II B 2	UPLAND	119		119						0.02			
2	D	4	259.44	259.51	U	N/A	I A 3, II A 2	UPLAND	390		390						0.07			
2	D	4	259.51	259.55	U	N/A	I C 2, II B 2	UPLAND	221		221						0.04			
2	D	4	259.55	259.57	U	N/A	I A 3, II A 2	UPLAND	97		97						0.02			
2	D	4	259.57	259.58	U	N/A	I C 2, II B 2	UPLAND	41		41						0.01			
2	D	4	259.58	259.61	U	N/A	I A 3, II A 2	UPLAND	153		153						0.03			
2	D	4	259.61	259.61	U	N/A	I C 2, II B 2	UPLAND	42		42						0.01			
2	D	4	259.61	259.65	U	N/A	I A 3, II A 2	UPLAND	215		215						0.04			
2	D	4	259.65	259.73	U	N/A	I C 2, II B 2	UPLAND	411		411						0.08			
2	D	4	259.73	259.76	U	N/A	I A 2	UPLAND	153		153						0.03			
2	D	4	259.76	259.81	PSS4B	FLAT - ORGANIC	II A 2, II C 2	WETLAND	252	252							0.05			
2	D	4	259.81	259.83	D	N/A	NONE	DISTURBED	126			126					0.02			
2	D	4	259.83	259.86	PSS4/1B	FLAT - ORGANIC	II A 2, II C 2	WETLAND	132	132							0.02			
2	D	4	259.86	259.89	PSS1/EM1B	FLAT - ORGANIC	II B 2, III A 2	WETLAND	162	162							0.03			
2	D	4	259.89	259.91	PSS1/EM1B	FLAT - ORGANIC	II B 2, III B 1	WETLAND	105	105							0.02			
2	D	4	259.91	259.95	U	N/A	II B 2, III B 1	UPLAND	198		198						0.04			
2	D	4	259.95	259.96	PSS1/EM1B	FLAT - ORGANIC	II B 2, III A 2	WETLAND	92	92							0.02			
2	D	4	259.96	259.97	U	N/A	II B 2, III B 1	UPLAND	40		40						0.01			
2	D	4	259.97	259.98	PSS1/EM1B	FLAT - ORGANIC	II B 2, III A 2	WETLAND	68	68							0.01			
2	D	4	259.98	260.05	U	N/A	II B 2, III B 1	UPLAND	350		350						0.07			
2	D	4	260.05	260.06	PSS1/EM1B	FLAT - ORGANIC	II B 2, III A 2	WETLAND	26	26							0.00			
2	D	4	260.06	260.06	U	N/A	II B 2, III B 1	UPLAND	42		42						0.01			
2	D	4	260.06	260.08	PSS1/EM1B	FLAT - ORGANIC	II B 2, III A 2	WETLAND	93	93							0.02			
2	D	4	260.08	260.15	U	N/A	II B 2, III B 1	UPLAND	360		360						0.07			
2	D	4	260.15	260.24	PSS1/EM1B	FLAT - ORGANIC	II B 2, III A 2	WETLAND	491	491							0.09			
2	D	4	260.24	260.32	PSS4/1B	FLAT - ORGANIC	II A 2, II C 2	WETLAND	424	424							0.08			
2	D	4	260.32	260.35	U	N/A	I C 2	UPLAND	152		152						0.03			
2	D	4	260.35	260.49	PSS4/1B	FLAT - ORGANIC	II A 2, II C 2	WETLAND	726	726							0.14			
2	D	4	260.49	260.52	PEM1F	SLOPE	III A 3	WETLAND	187	187							0.04			
2	D	4	260.52	260.56	PSS1B	FLAT - ORGANIC	II C 2	WETLAND	178	178							0.03			
2	D	4	260.56	260.59	PFO4B	FLAT - ORGANIC	I A 2	WETLAND	151	151							0.03			
2	D	4	260.59	260.60	PFO4B	SLOPE	I A 2, II B 2	WETLAND	57	57							0.01			
2	D	4	260.60	260.61	U	N/A	I A 2	UPLAND	87		87						0.02			
2	D	4	260.61	260.62	U	N/A	II B 2	UPLAND	11		11						0.00			
2	D	4	260.62	260.62	PSS1B	SLOPE	II B 2	WETLAND	18	18							0.00			
2	D	4	260.62	260.64	U	N/A	II B 2	UPLAND	104		104						0.02			
2	D	WB-S	260.64	260.64	U	N/A	II B 2	UPLAND	22		22									0.00
2	D	WB-S	260.64	260.65	R3USC	RIVERINE	NONE	WETLAND	27	27										0.01
2	D	WB-S	260.65	260.66	R3UBH	RIVERINE	NONE	WETLAND	64	64										0.01
2	D	WB-S	260.66	260.67	PSS1C	RIVERINE	II B 2	WETLAND	32	32										0.01
2	D	WB-S	260.67	260.69	R3USC	RIVERINE	NONE	WETLAND	118	118										0.02
2	D	WB-S	260.69	260.74	PSS1C	RIVERINE	II B 2	WETLAND	257	257										0.05
2	D	WB-S	260.74	260.76	R3USC	RIVERINE	NONE	WETLAND	134	134										0.03
2	D	WB-S	260.76	260.78	R3UBH	RIVERINE	NONE	WETLAND	112	112										0.02
2	D	WB-S	260.78	260.79	PSS1/4B	FLAT - ORGANIC	II C 2, II A 3	WETLAND	43	43										0.01
2	D	4	260.79	260.85	PSS1/4B	FLAT - ORGANIC	II C 2, II A 3	WETLAND	294	294							0.06			
2	D	4	260.85	260.86	PSS1/4B	FLAT - MINERAL	II C 2, II A 3	WETLAND	61	61							0.01			

SPREAD	SECTION	ROW MODE	FROM MP	TO MP	NWI CODE	HGM CLASS	VIERECK	DESCRIPTION	LINEAR FEET	WETLAND FEET	UPLAND FEET	DISTURBED FEET	Comments	Mode 1 - Ice Workpad (miles)	Mode 2 - Frost Pack (miles)	Mode 3 - Timber Mats	Mode 4 - Granular Workpad	Mode 5A - Grade	Mode 5B - Mountain Grade	Stream & Flood Plain Crossings
2	D	4	260.86	260.88	PSS1/EM1B	FLAT - MINERAL	II C 2, III A 2	WETLAND	92	92							0.02			
2	D	4	260.88	260.98	PSS1/EM1B	FLAT - ORGANIC	II C 2, III A 2	WETLAND	563	563							0.11			
2	D	4	260.98	260.99	PSS1C	RIVERINE	II B 2, II C 2	WETLAND	11	11							0.00			
2	D	WB-S	260.99	260.99	PSS1C	RIVERINE	II B 2, II C 2	WETLAND	35	35										0.01
2	D	WB-S	260.99	261.00	PEM1/SS1B	FLAT - ORGANIC	III A 2, II C 2	WETLAND	55	55										0.01
2	D	4	261.00	261.09	PEM1/SS1B	FLAT - ORGANIC	III A 2, II C 2	WETLAND	444	444							0.08			
2	D	4	261.09	261.47	PSS1/EM1B	FLAT - ORGANIC	II C 2, III A 2	WETLAND	2039	2039							0.39			
2	D	4	261.47	261.93	PEM1/SS1B	FLAT - ORGANIC	III A 2, II C 2	WETLAND	2441	2441							0.46			
2	D	4	261.93	262.19	PSS1/4B	FLAT - ORGANIC	II C 2, II A 2	WETLAND	1337	1337							0.25			
2	D	4	262.19	262.20	PSS1/4B	FLAT - ORGANIC	II C 2, II A 3	WETLAND	65	65							0.01			
2	D	4	262.20	262.36	PSS3/EM1B	FLAT - ORGANIC	II D 2, III A 2	WETLAND	830	830							0.16			
2	D	4	262.36	262.36	PSS1/4B	FLAT - ORGANIC	II C 2, II A 3	WETLAND	30	30							0.01			
2	D	4	262.36	262.70	PSS3/EM1B	FLAT - ORGANIC	II D 2, III A 2	WETLAND	1765	1765							0.33			
2	D	4	262.70	262.70	D	N/A	NONE	DISTURBED	25			25					0.00			
2	D	4	262.70	262.81	U	N/A	I C 2	UPLAND	563		563						0.11			
2	D	WB-S	262.81	262.82	U	N/A	I C 2	UPLAND	60		60									0.01
2	D	4	262.82	262.82	U	N/A	I C 2	UPLAND	6		6						0.00			
2	D	4	262.82	262.86	PFO4B	FLAT - ORGANIC	I A 2	WETLAND	184	184							0.03			
2	D	4	262.86	262.87	PSS1C	SLOPE	II C 2	WETLAND	60	60							0.01			
2	D	4	262.87	262.88	PSS4B	FLAT - ORGANIC	II A 2	WETLAND	67	67							0.01			
2	D	4	262.88	262.89	PSS1C	SLOPE	II C 2	WETLAND	42	42							0.01			
2	D	4	262.89	262.95	PSS1/4B	FLAT - ORGANIC	II C 2, II A 3	WETLAND	331	331							0.06			
2	D	4	262.95	262.96	PSS1C	SLOPE	II B 2	WETLAND	26	26							0.00			
2	D	4	262.96	262.98	PSS1/4B	FLAT - ORGANIC	II C 2, II A 3	WETLAND	151	151							0.03			
2	D	4	262.98	263.06	PSS1/EM1B	FLAT - ORGANIC	II C 2, III A 2	WETLAND	376	376							0.07			
2	D	4	263.06	263.07	PSS1C	RIVERINE	II B 2	WETLAND	53	53							0.01			
2	D	4	263.07	263.07	PSS1/4B	FLAT - ORGANIC	II C 2, II A 3	WETLAND	9	9							0.00			
2	D	4	263.07	263.08	PSS1C	RIVERINE	II B 2	WETLAND	47	47							0.01			
2	D	4	263.08	263.16	PSS1/EM1B	FLAT - ORGANIC	II C 2, III A 2	WETLAND	436	436							0.08			
2	D	4	263.16	263.16	PSS1C	RIVERINE	II B 2	WETLAND	12	12							0.00			
2	D	WB-S	263.16	263.17	PSS1C	RIVERINE	II B 2	WETLAND	33	33										0.01
2	D	WB-S	263.17	263.17	PSS1/EM1B	FLAT - ORGANIC	II C 2, III A 2	WETLAND	27	27										0.01
2	D	4	263.17	263.33	PSS1/EM1B	FLAT - ORGANIC	II C 2, III A 2	WETLAND	854	854							0.16			
2	D	4	263.33	263.34	PEM1/SS1B	SLOPE	III A 2, II C 2	WETLAND	47	47							0.01			
2	D	4	263.34	263.41	PSS1/EM1B	FLAT - ORGANIC	II C 2, III A 2	WETLAND	347	347							0.07			
2	D	4	263.41	263.42	PEM1/SS1B	SLOPE	III A 2, II C 2	WETLAND	74	74							0.01			
2	D	4	263.42	263.48	PSS1/EM1B	FLAT - ORGANIC	II C 2, III A 2	WETLAND	313	313							0.06			
2	D	4	263.48	263.49	PEM1/SS1B	SLOPE	III A 2, II C 2	WETLAND	31	31							0.01			
2	D	4	263.49	263.51	PSS1/EM1B	FLAT - ORGANIC	II C 2, III A 2	WETLAND	132	132							0.03			
2	D	4	263.51	263.54	PSS4/1B	FLAT - ORGANIC	II A 2, II C 2	WETLAND	125	125							0.02			
2	D	4	263.54	263.54	U	N/A	I C 1	UPLAND	26		26						0.00			
2	D	WB-S	263.54	263.55	U	N/A	I C 1	UPLAND	42		42									0.01
2	D	WB-S	263.55	263.55	PSS4B	FLAT - ORGANIC	II A 2	WETLAND	18	18										0.00
2	D	4	263.55	263.61	PSS4B	FLAT - ORGANIC	II A 2	WETLAND	298	298							0.06			
2	D	4	263.61	263.65	U	N/A	I C 1	UPLAND	212		212						0.04			
2	D	WB-S	263.65	263.66	U	N/A	I C 1	UPLAND	60		60									0.01
2	D	4	263.66	263.66	U	N/A	I C 1	UPLAND	8		8						0.00			
2	D	4	263.66	263.75	PSS1/4B	FLAT - ORGANIC	II C 2, II A 3	WETLAND	455	455							0.09			
2	D	4	263.75	263.78	U	N/A	I C 3	UPLAND	164		164						0.03			
2	D	4	263.78	263.81	PSS1/4B	FLAT - ORGANIC	II C 2, II A 3	WETLAND	168	168							0.03			
2	D	4	263.81	263.93	PSS1/EM1B	FLAT - ORGANIC	II C 2, III A 2	WETLAND	604	604							0.11			
2	D	4	263.93	263.93	PSS1/4B	SLOPE	II C 2, II A 3	WETLAND	42	42							0.01			
2	D	4	263.93	263.99	PSS1/EM1B	FLAT - ORGANIC	II C 2, III A 2	WETLAND	314	314							0.06			
2	D	4	263.99	264.00	PSS1/4B	SLOPE	II C 2, II A 3	WETLAND	38	38							0.01			
2	D	4	264.00	264.01	PSS1/EM1B	FLAT - ORGANIC	II C 2, III A 2	WETLAND	54	54							0.01			
2	D	4	264.01	264.01	PSS1/4B	SLOPE	II C 2, II A 3	WETLAND	18	18							0.00			
2	D	4	264.01	264.02	PSS1C	RIVERINE	II B 2, II C 2	WETLAND	42	42							0.01			
2	D	4	264.02	264.05	PSS1/4B	SLOPE	II C 2, II A 3	WETLAND	128	128							0.02			
2	D	4	264.05	264.17	PSS1/EM1B	FLAT - ORGANIC	II C 2, III A 2	WETLAND	674	674							0.13			
2	D	4	264.17	264.19	PSS1C	SLOPE	II B 2, II C 2	WETLAND	74	74							0.01			
2	D	4	264.19	264.24	PSS1/EM1B	FLAT - ORGANIC	II C 2, III A 2	WETLAND	299	299							0.06			
2	D	4	264.24	264.25	PSS1C	SLOPE	II B 2, II C 2	WETLAND	19	19							0.00			
2	D	4	264.25	264.26	D	N/A	NONE	DISTURBED	69			69					0.01			
2	D	4	264.26	264.29	PSS1C	SLOPE	II B 2, II C 2	WETLAND	125	125							0.02			
2	D	4	264.29	264.29	PSS1/EM1B	FLAT - ORGANIC	II C 2, III A 2	WETLAND	48	48							0.01			
2	D	4	264.29	264.31	PEM1/SS1B	FLAT - ORGANIC	III A 2, II C 2	WETLAND	88	88							0.02			
2	D	4	264.31	264.33	PSS1/EM1B	FLAT - ORGANIC	II C 2, III A 2	WETLAND	80	80							0.02			
2	D	4	264.33	264.34	PSS1C	SLOPE	II B 2, II C 2	WETLAND	60	60							0.01			
2	D	4	264.34	264.44	PSS1/EM1B	FLAT - ORGANIC	II C 2, III A 2	WETLAND	527	527							0.10			
2	D	4	264.44	264.44	PEM1/SS1B	FLAT - ORGANIC	III A 2, II C 2	WETLAND	8	8							0.00			
2	D	4	264.44	264.46	PSS1/EM1B	FLAT - ORGANIC	II C 2, III A 2	WETLAND	125	125							0.02			
2	D	WB-S	264.46	264.46	PSS1/EM1B	FLAT - ORGANIC	II C 2, III A 2	WETLAND	8	8										0.00

SPREAD	SECTION	ROW MODE	FROM MP	TO MP	NWI CODE	HGM CLASS	VIERECK	DESCRIPTION	LINEAR FEET	WETLAND FEET	UPLAND FEET	DISTURBED FEET	Comments	Mode 1 - Ice Workpad (miles)	Mode 2 - Frost Pack (miles)	Mode 3 - Timber Mats	Mode 4 - Granular Workpad	Mode 5A - Grade	Mode 5B - Mountain Grade	Stream & Flood Plain Crossings
2	D	WB-S	264.46	264.47	PSS1C	RIVERINE	II B 2, II C 2	WETLAND	52	52										0.01
2	D	4	264.47	264.49	PSS1C	RIVERINE	II B 2, II C 2	WETLAND	60	60							0.01			
2	D	4	264.49	264.50	PSS1/EM1B	FLAT - ORGANIC	II C 2, III A 2	WETLAND	78	78							0.01			
2	D	4	264.50	264.51	PSS1C	RIVERINE	II B 2, II C 2	WETLAND	73	73							0.01			
2	D	4	264.51	264.53	PSS1/EM1E	SLOPE	II C 2, III A 2	WETLAND	98	98							0.02			
2	D	4	264.53	264.54	PSS1/EM1B	FLAT - ORGANIC	II C 2, III A 2	WETLAND	28	28							0.01			
2	D	4	264.54	264.73	PSS1/EM1B	DEPRESSIONAL	II C 2, III A 2	WETLAND	995	995							0.19			
2	D	4	264.73	264.80	PSS1/EM1B	FLAT - ORGANIC	II C 2, III A 2	WETLAND	391	391							0.07			
2	D	4	264.80	264.82	PSS1/EM1E	SLOPE	II C 2, III A 2	WETLAND	96	96							0.02			
2	D	4	264.82	264.85	PSS1/EM1B	FLAT - ORGANIC	II C 2, III A 2	WETLAND	188	188							0.04			
2	D	4	264.85	264.86	PSS1/EM1E	SLOPE	II C 2, III A 2	WETLAND	28	28							0.01			
2	D	4	264.86	264.94	PSS1/EM1B	FLAT - ORGANIC	II C 2, III A 2	WETLAND	403	403							0.08			
2	D	4	264.94	264.98	PSS1/EM1B	FLAT - ORGANIC	II C 2, III A 2	WETLAND	218	218							0.04			
2	D	4	264.98	264.99	PSS1C	RIVERINE	II B 2	WETLAND	53	53							0.01			
2	D	4	264.99	265.00	PSS1/4B	FLAT - ORGANIC	II C 2, II A 2	WETLAND	50	50							0.01			
2	D	4	265.00	265.03	PSS1/EM1B	FLAT - ORGANIC	II C 2, III A 2	WETLAND	152	152							0.03			
2	D	4	265.03	265.04	PSS1C	SLOPE	II B 2	WETLAND	58	58							0.01			
2	D	4	265.04	265.05	PSS1/4B	FLAT - ORGANIC	II C 2, II A 2	WETLAND	61	61							0.01			
2	D	4	265.05	265.06	PSS1C	SLOPE	II B 2	WETLAND	72	72							0.01			
2	D	4	265.06	265.13	PSS1/4C	FLAT - ORGANIC	II C 2, II A 3	WETLAND	386	386							0.07			
2	D	4	265.13	265.21	PSS1/EM1B	FLAT - ORGANIC	II C 2, III A 2	WETLAND	413	413							0.08			
2	D	4	265.21	265.25	PSS1/EM1B	FLAT - ORGANIC	II C 2, III A 2	WETLAND	220	220							0.04			
2	D	4	265.25	265.27	PSS1/4B	FLAT - ORGANIC	II C 2, II A 2	WETLAND	66	66							0.01			
2	D	4	265.27	265.27	PSS1/EM1B	FLAT - ORGANIC	II C 2, III A 2	WETLAND	8	8							0.00			
2	D	4	265.27	265.27	PSS1C	RIVERINE	II B 2	WETLAND	16	16							0.00			
2	D	4	265.27	265.28	PSS1/EM1B	FLAT - ORGANIC	II C 2, III A 2	WETLAND	35	35							0.01			
2	D	4	265.28	265.29	PSS1C	RIVERINE	II B 2	WETLAND	45	45							0.01			
2	D	WB-S	265.29	265.29	PSS1C	RIVERINE	II B 2	WETLAND	36	36										0.01
2	D	WB-S	265.29	265.30	PSS1/4B	FLAT - ORGANIC	II C 2, II A 2	WETLAND	24	24										0.00
2	D	4	265.30	265.30	PSS1/4B	FLAT - ORGANIC	II C 2, II A 2	WETLAND	31	31							0.01			
2	D	4	265.30	265.31	PSS1C	RIVERINE	II B 2	WETLAND	60	60							0.01			
2	D	4	265.31	265.41	PSS4/1B	FLAT - ORGANIC	II A 2, II C 2	WETLAND	527	527							0.10			
2	D	4	265.41	265.44	PSS1/EM1B	FLAT - ORGANIC	II C 2, III A 2	WETLAND	133	133							0.03			
2	D	4	265.44	265.45	PSS1/4B	FLAT - ORGANIC	II C 2, II A 2	WETLAND	37	37							0.01			
2	D	4	265.45	265.48	PSS4/1B	FLAT - ORGANIC	II A 2, II C 2	WETLAND	184	184							0.03			
2	D	4	265.48	265.49	PSS1C	RIVERINE	II B 2	WETLAND	48	48							0.01			
2	D	WB-S	265.49	265.50	PSS1C	RIVERINE	II B 2	WETLAND	60	60										0.01
2	D	4	265.50	265.51	PSS1C	RIVERINE	II B 2	WETLAND	58	58							0.01			
2	D	4	265.51	265.80	PEM1/SS1B	FLAT - ORGANIC	III A 2, II C 2	WETLAND	1498	1498							0.28			
2	D	4	265.80	265.81	PSS1C	RIVERINE	II B 2	WETLAND	45	45							0.01			
2	D	4	265.81	265.81	PSS1/4B	FLAT - ORGANIC	II C 2, II A 2	WETLAND	26	26							0.00			
2	D	4	265.81	265.86	PEM1/SS1B	FLAT - ORGANIC	III A 2, II C 2	WETLAND	241	241							0.05			
2	D	4	265.86	265.86	PSS1/EM1B	SLOPE	II C 2, III A 2	WETLAND	24	24							0.00			
2	D	4	265.86	265.93	PEM1/SS1B	FLAT - ORGANIC	III A 2, II C 2	WETLAND	385	385							0.07			
2	D	4	265.93	265.94	PSS1/4B	FLAT - ORGANIC	II C 2, II A 2	WETLAND	43	43							0.01			
2	D	4	265.94	265.95	PSS1/EM1C	RIVERINE	II B 2, III A 2	WETLAND	20	20							0.00			
2	D	WB-S	265.95	265.95	PSS1/EM1C	RIVERINE	II B 2, III A 2	WETLAND	14	14										0.00
2	D	WB-S	265.95	265.96	PEM1/SS1B	FLAT - ORGANIC	III A 2, II C 2	WETLAND	46	46										0.01
2	D	4	265.96	266.03	PEM1/SS1B	FLAT - ORGANIC	III A 2, II C 2	WETLAND	391	391							0.07			
2	D	4	266.03	266.04	PEM1/SS1C	SLOPE	III A 2, II C 2	WETLAND	35	35							0.01			
2	D	4	266.04	266.05	PEM1/SS1B	FLAT - ORGANIC	III A 2, II C 2	WETLAND	61	61							0.01			
2	D	4	266.05	266.05	PEM1/SS1C	SLOPE	III A 2, II C 2	WETLAND	14	14							0.00			
2	D	4	266.05	266.08	PEM1/SS1B	FLAT - ORGANIC	III A 2, II C 2	WETLAND	132	132							0.03			
2	D	4	266.08	266.08	PEM1/SS1C	SLOPE	III A 2, II C 2	WETLAND	30	30							0.01			
2	D	4	266.08	266.13	PEM1/SS1B	FLAT - ORGANIC	III A 2, II C 2	WETLAND	238	238							0.05			
2	D	4	266.13	266.13	PSS1C	SLOPE	II B 2	WETLAND	33	33							0.01			
2	D	4	266.13	266.15	PEM1/SS1B	FLAT - ORGANIC	III A 2, II C 2	WETLAND	90	90							0.02			
2	D	4	266.15	266.16	PSS1C	SLOPE	II B 2	WETLAND	48	48							0.01			
2	D	4	266.16	266.17	PEM1/SS1B	FLAT - ORGANIC	III A 2, II C 2	WETLAND	77	77							0.01			
2	D	4	266.17	266.18	PSS1C	SLOPE	II B 2	WETLAND	49	49							0.01			
2	D	4	266.18	266.24	PEM1/SS1B	FLAT - ORGANIC	III A 2, II C 2	WETLAND	272	272							0.05			
2	D	4	266.24	266.24	PEM1/SS1B	SLOPE	III A 2, II C 2	WETLAND	20	20							0.00			
2	D	4	266.24	266.27	PEM1/SS1B	FLAT - ORGANIC	III A 2, II C 2	WETLAND	158	158							0.03			
2	D	4	266.27	266.27	PSS1C	SLOPE	II B 2	WETLAND	2	2							0.00			
2	D	WB-S	266.27	266.27	PSS1C	SLOPE	II B 2	WETLAND	20	20										0.00
2	D	WB-S	266.27	266.29	PEM1/SS1B	FLAT - ORGANIC	III A 2, II C 2	WETLAND	70	70										0.01
2	D	4	266.29	266.37	PEM1/SS1B	FLAT - ORGANIC	III A 2, II C 2	WETLAND	460	460							0.09			
2	D	4	266.37	266.41	PSS4/1B	FLAT - ORGANIC	II A 2, II C 2	WETLAND	186	186							0.04			
2	D	4	266.41	266.44	PEM1/SS1B	FLAT - ORGANIC	III A 2, II C 2	WETLAND	161	161							0.03			
2	D	4	266.44	266.48	PSS4/1B	FLAT - ORGANIC	II A 2, II C 2	WETLAND	196	196							0.04			
2	D	4	266.48	266.51	PSS1C	SLOPE	II B 1, II B 2	WETLAND	196	196							0.04			
2	D	4	266.51	266.92	PSS4/1B	FLAT - ORGANIC	II A 2, II C 2	WETLAND	2154	2154							0.41			

SPREAD	SECTION	ROW MODE	FROM MP	TO MP	NWI CODE	HGM CLASS	VIERECK	DESCRIPTION	LINEAR FEET	WETLAND FEET	UPLAND FEET	DISTURBED FEET	Comments	Mode 1 - Ice Workpad (miles)	Mode 2 - Frost Pack (miles)	Mode 3 - Timber Mats	Mode 4 - Granular Workpad	Mode 5A - Grade	Mode 5B - Mountain Grade	Stream & Flood Plain Crossings
2	D	4	266.92	266.93	PSS1/EM1C	RIVERINE	II B 2, III A 2	WETLAND	37	37							0.01			
2	D	WB-S	266.93	266.94	PSS1/EM1C	RIVERINE	II B 2, III A 2	WETLAND	60	60										0.01
2	D	4	266.94	266.97	PSS1/EM1C	RIVERINE	II B 2, III A 2	WETLAND	144	144							0.03			
2	D	4	266.97	267.04	PSS4/1B	FLAT - ORGANIC	II A 2, II C 2	WETLAND	411	411							0.08			
2	D	4	267.04	267.08	U	N/A	II B 2, II A 3	UPLAND	160		160						0.03			
2	D	4	267.08	267.42	PSS4/1B	FLAT - ORGANIC	II A 2, II C 2	WETLAND	1833	1833							0.35			
2	D	4	267.42	267.48	PFO4B	FLAT - ORGANIC	I A 2, II C 2	WETLAND	293	293							0.06			
2	D	4	267.48	267.54	PSS4/1B	FLAT - ORGANIC	II A 2, II C 2	WETLAND	336	336							0.06			
2	D	4	267.54	267.55	U	N/A	II B 2	UPLAND	44		44						0.01			
2	D	4	267.55	267.56	PSS4/1B	FLAT - ORGANIC	II A 2, II C 2	WETLAND	45	45							0.01			
2	D	4	267.56	267.56	PSS1/EM1B	SLOPE	II C 2, III A 2	WETLAND	17	17							0.00			
2	D	4	267.56	267.57	PSS4/1B	FLAT - ORGANIC	II A 2, II C 2	WETLAND	44	44							0.01			
2	D	4	267.57	267.58	PSS1/EM1B	SLOPE	II C 2, III A 2	WETLAND	38	38							0.01			
2	D	4	267.58	267.59	PSS1/FO4B	SLOPE	I A 3, II C 2	WETLAND	68	68							0.01			
2	D	4	267.59	267.77	PSS4/1B	FLAT - ORGANIC	II A 2, II C 2	WETLAND	945	945							0.18			
2	D	4	267.77	267.79	PSS1/4B	SLOPE	II C 2, II A 3	WETLAND	120	120							0.02			
2	D	4	267.79	267.85	PSS4/1B	FLAT - ORGANIC	II A 2, II C 2	WETLAND	300	300							0.06			
2	D	4	267.85	267.85	PSS1B	DEPRESSIONAL	II C 2	WETLAND	35	35							0.01			
2	D	4	267.85	267.95	PSS4/1B	FLAT - ORGANIC	II A 2, II C 2	WETLAND	495	495							0.09			
2	D	4	267.95	267.96	PSS1/4B	SLOPE	II C 2, II A 3	WETLAND	35	35							0.01			
2	D	4	267.96	267.97	PFO4/SS1B	FLAT - ORGANIC	I A 2, II C 2	WETLAND	52	52							0.01			
2	D	4	267.97	267.97	PSS1/4B	SLOPE	II C 2, II A 3	WETLAND	35	35							0.01			
2	D	4	267.97	268.01	PSS4/1B	FLAT - ORGANIC	II A 2, II C 2	WETLAND	195	195							0.04			
2	D	4	268.01	268.04	PFO4/SS1B	FLAT - ORGANIC	I A 2, II C 2	WETLAND	163	163							0.03			
2	D	4	268.04	268.07	PSS4/1B	FLAT - ORGANIC	II A 2, II C 2	WETLAND	179	179							0.03			
2	D	4	268.07	268.09	PSS1/4B	SLOPE	II C 2, II A 3	WETLAND	62	62							0.01			
2	D	4	268.09	268.10	PSS1C	RIVERINE	II B 2	WETLAND	98	98							0.02			
2	D	4	268.10	268.12	PSS4/1B	FLAT - ORGANIC	II A 2, II C 2	WETLAND	77	77							0.01			
2	D	4	268.12	268.12	PSS1B	DEPRESSIONAL	II C 2	WETLAND	36	36							0.01			
2	D	4	268.12	268.13	PSS4/1B	FLAT - ORGANIC	II A 2, II C 2	WETLAND	51	51							0.01			
2	D	4	268.13	268.14	PSS1B	DEPRESSIONAL	II C 2	WETLAND	28	28							0.01			
2	D	4	268.14	268.16	PSS4/1B	FLAT - ORGANIC	II A 2, II C 2	WETLAND	111	111							0.02			
2	D	4	268.16	268.16	PSS1C	RIVERINE	II B 2	WETLAND	2	2							0.00			
2	D	WB-S	268.16	268.17	PSS1C	RIVERINE	II B 2	WETLAND	32	32										0.01
2	D	WB-S	268.17	268.18	PSS4/1B	FLAT - ORGANIC	II A 2, II C 2	WETLAND	58	58										0.01
2	D	4	268.18	268.27	PSS4/1B	FLAT - ORGANIC	II A 2, II C 2	WETLAND	477	477							0.09			
2	D	4	268.27	268.28	PSS4B	FLAT - ORGANIC	II A 2	WETLAND	63	63							0.01			
2	D	4	268.28	268.37	PSS1/4B	FLAT - ORGANIC	II C 2, II A 3	WETLAND	450	450							0.09			
2	D	4	268.37	268.39	PSS4/1B	FLAT - ORGANIC	II A 2, II C 2	WETLAND	116	116							0.02			
2	D	4	268.39	268.43	PSS1/4B	FLAT - ORGANIC	II C 2, II A 3	WETLAND	237	237							0.04			
2	D	4	268.43	268.49	PSS4/1B	FLAT - ORGANIC	II A 2, II C 2	WETLAND	329	329							0.06			
2	D	4	268.49	268.51	PSS4B	SLOPE	I A 2, II B 2	WETLAND	80	80							0.02			
2	D	4	268.51	268.53	PSS1/FO4C	SLOPE	II B 2, I A 3	WETLAND	100	100							0.02			
2	D	4	268.53	268.55	PSS4B	FLAT - ORGANIC	II A 2	WETLAND	96	96							0.02			
2	D	4	268.55	268.56	PSS1/FO1C	RIVERINE	I C 3, II B 2	WETLAND	60	60							0.01			
2	D	4	268.56	268.56	U	N/A	I C 2, II B 2	UPLAND	29		29						0.01			
2	D	4	268.56	268.61	PSS1/4B	FLAT - ORGANIC	II C 2, II A 3	WETLAND	253	253							0.05			
2	D	4	268.61	268.65	U	N/A	I C 2, II B 2	UPLAND	178		178						0.03			
2	D	4	268.65	268.66	PSS4/1B	FLAT - ORGANIC	II A 2, II C 2	WETLAND	95	95							0.02			
2	D	4	268.66	268.68	U	N/A	I C 2, II B 2	UPLAND	65		65						0.01			
2	D	4	268.68	268.71	PSS4/1B	FLAT - ORGANIC	II A 2, II C 2	WETLAND	203	203							0.04			
2	D	4	268.71	268.73	U	N/A	I C 2, II B 2	UPLAND	68		68						0.01			
2	D	4	268.73	268.75	PSS4/1B	FLAT - ORGANIC	II A 2, II C 2	WETLAND	126	126							0.02			
2	D	4	268.75	268.76	PSS1/FO4B	SLOPE	I A 3, II B 2	WETLAND	41	41							0.01			
2	D	4	268.76	268.91	PSS4/1B	FLAT - ORGANIC	II A 2, II C 2	WETLAND	796	796							0.15			
2	D	4	268.91	268.94	U	N/A	I A 2, II C 2	UPLAND	137		137						0.03			
2	D	4	268.94	269.14	PSS4/1B	FLAT - ORGANIC	II A 2, II C 2	WETLAND	1051	1051							0.20			
2	D	4	269.14	269.16	U	N/A	I A 2, II C 2	UPLAND	155		155						0.03			
2	D	4	269.16	269.21	PSS4/1B	FLAT - ORGANIC	II A 2, II C 2	WETLAND	248	248							0.05			
2	D	4	269.21	269.22	PSS1/4B	SLOPE	II C 2, II A 3	WETLAND	53	53							0.01			
2	D	4	269.22	269.24	PSS4/1B	SLOPE	II A 2, II C 2	WETLAND	116	116							0.02			
2	D	4	269.24	269.25	PSS1/EM1E	SLOPE	II C 2, III A 2	WETLAND	47	47							0.01			
2	D	4	269.25	269.29	PSS1/EM1B	FLAT - ORGANIC	II C 2, III A 2	WETLAND	190	190							0.04			
2	D	4	269.29	269.39	PSS1/4B	FLAT - ORGANIC	I A 3, II C 2	WETLAND	527	527							0.10			
2	D	4	269.39	269.41	PEM1F	DEPRESSIONAL	III A 3	WETLAND	110	110							0.02			
2	D	4	269.41	269.42	PSS1/4B	FLAT - ORGANIC	I A 3, II C 2	WETLAND	73	73							0.01			
2	D	4	269.42	269.45	PSS1/EM1B	FLAT - ORGANIC	II C 2, III A 2	WETLAND	129	129							0.02			
2	D	4	269.45	269.46	PSS1/EM1E	DEPRESSIONAL	II C 2, III A 2	WETLAND	81	81							0.02			
2	D	4	269.46	269.53	PSS1/EM1B	FLAT - ORGANIC	II C 2, III A 2	WETLAND	358	358							0.07			
2	D	4	269.53	269.59	PSS1/4B	FLAT - ORGANIC	I A 3, II C 2	WETLAND	308	308							0.06			
2	D	4	269.59	269.59	PSS1/EM1E	SLOPE	II C 2, III A 2	WETLAND	33	33							0.01			
2	D	4	269.59	269.62	PSS1/4B	FLAT - ORGANIC	I A 3, II C 2	WETLAND	108	108							0.02			

SPREAD	SECTION	ROW MODE	FROM MP	TO MP	NWI CODE	HGM CLASS	VIERECK	DESCRIPTION	LINEAR FEET	WETLAND FEET	UPLAND FEET	DISTURBED FEET	Comments	Mode 1 - Ice Workpad (miles)	Mode 2 - Frost Pack (miles)	Mode 3 - Timber Mats	Mode 4 - Granular Workpad	Mode 5A - Grade	Mode 5B - Mountain Grade	Stream & Flood Plain Crossings
2	D	4	269.62	269.62	PSS1/EM1E	SLOPE	II C 2, III A 2	WETLAND	8	8							0.00			
2	D	4	269.62	269.80	PSS1/4B	FLAT - ORGANIC	I A 3, II C 2	WETLAND	950	950							0.18			
2	D	4	269.80	269.86	U	N/A	I A 2, II C 2	UPLAND	357		357						0.07			
2	D	4	269.86	269.88	PFO4/SS1B	SLOPE	I A 2, II C 2	WETLAND	80	80							0.02			
2	D	4	269.88	269.89	PSS4/1B	FLAT - ORGANIC	II A 2, II C 2	WETLAND	66	66							0.01			
2	D	4	269.89	269.90	U	N/A	I A 2, II C 2	UPLAND	49		49						0.01			
2	D	4	269.90	269.91	PSS4/1B	FLAT - ORGANIC	II A 2, II C 2	WETLAND	53	53							0.01			
2	D	4	269.91	269.93	U	N/A	I A 2, II C 2	UPLAND	124		124						0.02			
2	D	4	269.93	270.12	PSS4/1B	FLAT - ORGANIC	II A 2, II C 2	WETLAND	958	958							0.18			
2	D	4	270.12	270.15	PEM1/SS1F	DEPRESSIONAL	III A 3, II C 2	WETLAND	172	172							0.03			
2	D	4	270.15	270.16	PFO4/SS1B	FLAT - ORGANIC	I A 2, II C 2	WETLAND	50	50							0.01			
2	D	4	270.16	270.16	PSS1/EM1F	DEPRESSIONAL	II C 2, III A 2	WETLAND	12	12							0.00			
2	D	4	270.16	270.17	PFO4/SS1B	FLAT - ORGANIC	I A 2, II C 2	WETLAND	52	52							0.01			
2	D	4	270.17	270.17	PSS1/EM1F	DEPRESSIONAL	II C 2, III A 2	WETLAND	21	21							0.00			
2	D	4	270.17	270.18	PFO4/SS1B	FLAT - ORGANIC	I A 2, II C 2	WETLAND	25	25							0.00			
2	D	4	270.18	270.32	PSS1/4B	FLAT - ORGANIC	II C 2, II A 3	WETLAND	740	740							0.14			
2	D	4	270.32	270.32	PSS1/EM1C	FLAT - ORGANIC	II C 2, III A 2	WETLAND	19	19							0.00			
2	D	4	270.32	270.87	PSS1/4B	FLAT - ORGANIC	II C 2, II A 3	WETLAND	2910	2910							0.55			
2	D	4	270.87	270.92	PSS4/1B	FLAT - ORGANIC	II A 2, II C 2	WETLAND	265	265							0.05			
2	D	4	270.92	270.96	PSS1/4B	FLAT - ORGANIC	II C 2, II A 3	WETLAND	167	167							0.03			
2	D	4	270.96	271.02	PSS4/1B	FLAT - ORGANIC	II A 2, II C 2	WETLAND	336	336							0.06			
2	D	4	271.02	271.02	U	N/A	I C 1	UPLAND	29		29						0.01			
2	D	WB-S	271.02	271.03	U	N/A	I C 1	UPLAND	33		33									0.01
2	D	WB-S	271.03	271.04	PSS1/4B	FLAT - ORGANIC	II C 2, II A 3	WETLAND	27	27										0.01
2	D	5A	271.04	271.08	PSS1/4B	FLAT - ORGANIC	II C 2, II A 3	WETLAND	233	233								0.04		
2	D	5A	271.08	271.14	U	N/A	II A 2	UPLAND	331		331							0.06		
2	D	5A	271.14	271.26	PSS1/4B	FLAT - ORGANIC	II C 2, II A 3	WETLAND	621	621								0.12		
2	D	5A	271.26	271.28	U	N/A	II A 2	UPLAND	98		98							0.02		
2	D	5A	271.28	271.31	PSS4/1B	FLAT - ORGANIC	II A 2, II C 2	WETLAND	140	140								0.03		
2	D	5A	271.31	271.45	U	N/A	II A 2	UPLAND	758		758							0.14		
2	D	5A	271.45	271.46	PSS4/1B	FLAT - ORGANIC	II A 2, II C 2	WETLAND	40	40								0.01		
2	D	4	271.46	271.49	PSS4/1B	FLAT - ORGANIC	II A 2, II C 2	WETLAND	199	199							0.04			
2	D	4	271.49	271.53	PSS4/1B	FLAT - ORGANIC	II A 2, II C 2	WETLAND	211	211							0.04			
2	D	4	271.53	271.55	PSS4/1B	FLAT - ORGANIC	II A 2, II C 2	WETLAND	89	89							0.02			
2	D	4	271.55	271.58	PSS1/4B	FLAT - ORGANIC	II A 3, II C 2	WETLAND	179	179							0.03			
2	D	4	271.58	271.65	PSS4/1B	FLAT - ORGANIC	II A 2, II C 2	WETLAND	330	330							0.06			
2	D	4	271.65	271.73	PSS1/4B	FLAT - ORGANIC	II A 3, II C 2	WETLAND	412	412							0.08			
2	D	4	271.73	271.75	U	N/A	I A 2	UPLAND	130		130						0.02			
2	D	4	271.75	271.79	PSS4/1B	FLAT - ORGANIC	II A 2, II C 2	WETLAND	231	231							0.04			
2	D	4	271.79	271.80	PEM1/SS4C	DEPRESSIONAL	II A 3, III A 3	WETLAND	28	28							0.01			
2	D	4	271.80	271.83	PSS4/1B	FLAT - ORGANIC	II A 2, II C 2	WETLAND	157	157							0.03			
2	D	4	271.83	271.83	PEM1E	DEPRESSIONAL	III A 2	WETLAND	14	14							0.00			
2	D	4	271.83	271.93	PSS4/1B	FLAT - ORGANIC	II A 2, II C 2	WETLAND	505	505							0.10			
2	D	4	271.93	271.95	PEM1/SS1E	DEPRESSIONAL	III A 2, II C 2	WETLAND	108	108							0.02			
2	D	4	271.95	272.06	PSS4/1B	FLAT - ORGANIC	II A 2, II C 2	WETLAND	589	589							0.11			
2	D	WB-S	272.06	272.06	PSS4/1B	FLAT - ORGANIC	II A 2, II C 2	WETLAND	2	2										0.00
2	D	WB-S	272.06	272.06	PEM1/SS1E	DEPRESSIONAL	III A 2, II C 2	WETLAND	10	10										0.00
2	D	WB-S	272.06	272.06	PUBHx	DEPRESSIONAL	NONE	WETLAND	9	9										0.00
2	D	WB-S	272.06	272.07	PEM1/SS1E	DEPRESSIONAL	III A 2, II C 2	WETLAND	38	38										0.01
2	D	5A	272.07	272.09	PEM1/SS1E	DEPRESSIONAL	III A 2, II C 2	WETLAND	82	82								0.02		
2	D	5A	272.09	272.12	PSS4/1B	FLAT - ORGANIC	II A 2, II C 2	WETLAND	182	182								0.03		
2	D	5A	272.12	272.14	PSS4/1B	FLAT - ORGANIC	II A 2, II C 2	WETLAND	131	131								0.02		
2	D	5A	272.14	272.15	PEM1/SS4C	DEPRESSIONAL	II A 3, III A 3	WETLAND	48	48								0.01		
2	D	5A	272.15	272.18	PSS4/1B	FLAT - ORGANIC	II A 2, II C 2	WETLAND	152	152								0.03		
2	D	5A	272.18	272.19	D	N/A	II C 2	DISTURBED	45			45						0.01		
2	D	5A	272.19	272.25	PSS4/1B	FLAT - ORGANIC	II A 2, II C 2	WETLAND	309	309								0.06		
2	D	5A	272.25	272.28	PSS4/1B	DEPRESSIONAL	II A 2, II C 2	WETLAND	157	157								0.03		
2	D	5A	272.28	272.32	PFO4/1B	FLAT - ORGANIC	I A 2, II C 2	WETLAND	192	192								0.04		
2	D	5A	272.32	272.36	PSS4/1B	DEPRESSIONAL	II A 2, II C 2	WETLAND	236	236								0.04		
2	D	5A	272.36	272.40	PFO4/1B	FLAT - ORGANIC	I A 2, II C 2	WETLAND	198	198								0.04		
2	D	5A	272.40	272.46	U	N/A	I C 1	UPLAND	309		309							0.06		
2	D	WB-S	272.46	272.46	U	N/A	I C 1	UPLAND	27		27									0.01
2	D	WB-S	272.46	272.47	R3UBH	RIVERINE	NONE	WETLAND	60	60										0.01
2	D	WB-S	272.47	272.50	R3USC	RIVERINE	NONE	WETLAND	117	117										0.02
2	D	WB-S	272.50	272.51	PSS1C	RIVERINE	II B 2	WETLAND	66	66										0.01
2	D	WB-S	272.51	272.52	R3USC	RIVERINE	NONE	WETLAND	39	39										0.01
2	D	WB-S	272.52	272.55	PSS1C	RIVERINE	II B 2	WETLAND	176	176										0.03
2	D	WB-S	272.55	272.56	R4SB	RIVERINE	NONE	WETLAND	41	41										0.01
2	D	WB-S	272.56	272.56	PSS1/4B	FLAT - ORGANIC	II C 2, II A 3	WETLAND	43	43										0.01
2	D	4	272.56	272.61	PSS1/4B	FLAT - ORGANIC	II C 2, II A 3	WETLAND	227	227							0.04			
2	D	4	272.61	272.61	PSS1/EM1C	SLOPE	II C 2, III A 2	WETLAND	27	27							0.01			
2	D	4	272.61	272.66	PSS1/4B	FLAT - ORGANIC	II C 2, II A 3	WETLAND	263	263							0.05			

SPREAD	SECTION	ROW MODE	FROM MP	TO MP	NWI CODE	HGM CLASS	VIERECK	DESCRIPTION	LINEAR FEET	WETLAND FEET	UPLAND FEET	DISTURBED FEET	Comments	Mode 1 - Ice Workpad (miles)	Mode 2 - Frost Pack (miles)	Mode 3 - Timber Mats	Mode 4 - Granular Workpad	Mode 5A - Grade	Mode 5B - Mountain Grade	Stream & Flood Plain Crossings
2	D	4	272.66	272.68	PSS1/EM1C	SLOPE	II C 2, III A 2	WETLAND	99	99							0.02			
2	D	4	272.68	272.68	PSS4/1B	FLAT - ORGANIC	II C 2, II A 2	WETLAND	15	15							0.00			
2	D	4	272.68	272.71	PSS1/EM1C	SLOPE	II C 2, III A 2	WETLAND	146	146							0.03			
2	D	4	272.71	272.74	PSS4/1B	FLAT - ORGANIC	II A 3, II C 2	WETLAND	140	140							0.03			
2	D	4	272.74	272.80	PSS4/1B	SLOPE	II A 2, II C 2	WETLAND	317	317							0.06			
2	D	4	272.80	272.81	PSS1/EM1C	SLOPE	II C 2, III A 2	WETLAND	44	44							0.01			
2	D	4	272.81	272.84	PSS1/4B	FLAT - ORGANIC	II C 2, II A 3	WETLAND	173	173							0.03			
2	D	4	272.84	272.90	PSS4/1B	FLAT - ORGANIC	II C 2, II A 2	WETLAND	311	311							0.06			
2	D	4	272.90	272.90	PSS4/1B	SLOPE	II A 2, II C 2	WETLAND	0	0							0.00			
2	D	4	272.90	272.90	PSS1/4B	FLAT - ORGANIC	II C 2, II A 3	WETLAND	30	30							0.01			
2	D	4	272.90	272.91	PSS4/1B	SLOPE	II A 2, II C 2	WETLAND	34	34							0.01			
2	D	4	272.91	272.95	PSS1/4B	FLAT - ORGANIC	II C 2, II A 3	WETLAND	227	227							0.04			
2	D	4	272.95	272.96	PSS1/EM1C	SLOPE	II C 2, III A 2	WETLAND	33	33							0.01			
2	D	4	272.96	272.98	PSS1/4B	FLAT - ORGANIC	II C 2, II A 3	WETLAND	107	107							0.02			
2	D	4	272.98	273.00	PSS4/1B	FLAT - ORGANIC	II C 2, II A 2	WETLAND	93	93							0.02			
2	D	4	273.00	273.01	U	N/A	I C 2	UPLAND	42		42						0.01			
2	D	4	273.01	273.01	PSS4/1B	SLOPE	I A 2, II C 2	WETLAND	20	20							0.00			
2	D	4	273.01	273.02	U	N/A	I C 2	UPLAND	56		56						0.01			
2	D	4	273.02	273.14	PSS4/1B	FLAT - ORGANIC	II A 3, II C 2	WETLAND	642	642							0.12			
2	D	4	273.14	273.15	PSS4/1B	SLOPE	II A 3, II C 2	WETLAND	48	48							0.01			
2	D	4	273.15	273.27	PSS1/4B	FLAT - ORGANIC	II C 2, II A 3	WETLAND	610	610							0.12			
2	D	4	273.27	273.30	U	N/A	I A 2	UPLAND	177		177						0.03			
2	D	4	273.30	273.41	PSS1/4B	FLAT - ORGANIC	II C 2, II A 3	WETLAND	559	559							0.11			
2	D	WB-S	273.41	273.41	PSS1/4B	FLAT - ORGANIC	II C 2, II A 3	WETLAND	9	9										0.00
2	D	WB-S	273.41	273.42	PSS1/4C	SLOPE	II C 2, II A 3	WETLAND	42	42										0.01
2	D	WB-S	273.42	273.42	PSS4/1B	FLAT - ORGANIC	II A 3, II C 2	WETLAND	9	9										0.00
2	D	4	273.42	273.54	PSS4/1B	FLAT - ORGANIC	II A 3, II C 2	WETLAND	629	629							0.12			
2	D	4	273.54	273.68	PSS1/4B	FLAT - ORGANIC	II C 2, II A 3	WETLAND	750	750							0.14			
2	D	4	273.68	273.70	PSS1/EM1E	SLOPE	II C 2, III A 3	WETLAND	104	104							0.02			
2	D	4	273.70	273.84	PSS1/4B	FLAT - ORGANIC	II C 2, II A 3	WETLAND	743	743							0.14			
2	D	4	273.84	273.84	PSS1/EM1E	SLOPE	II C 2, III A 3	WETLAND	20	20							0.00			
2	D	4	273.84	273.85	PSS1/4C	SLOPE	II C 2, II A 3	WETLAND	20	20							0.00			
2	D	4	273.85	273.85	PSS1/EM1E	SLOPE	II C 2, III A 3	WETLAND	32	32							0.01			
2	D	4	273.85	273.99	PSS4/EM1B	FLAT - ORGANIC	II A 2, III A 2	WETLAND	732	732							0.14			
2	D	WB-S	273.99	273.99	PSS4/EM1B	FLAT - ORGANIC	II A 2, III A 2	WETLAND	4	4										0.00
2	D	WB-S	273.99	274.00	PSS1/4B	SLOPE	II A 3, II C 2	WETLAND	56	56										0.01
2	D	4	274.00	274.01	PSS1/4B	SLOPE	II A 3, II C 2	WETLAND	31	31							0.01			
2	D	4	274.01	274.02	PSS4/EM1B	FLAT - ORGANIC	II A 2, III A 2	WETLAND	44	44							0.01			
2	D	4	274.02	274.14	PSS4/EM1B	FLAT - ORGANIC	II A 2, III A 2	WETLAND	668	668							0.13			
2	D	4	274.14	274.27	PSS4/EM1B	FLAT - ORGANIC	II A 2, III A 2	WETLAND	690	690							0.13			
2	D	4	274.27	274.31	U	N/A	II A 2	UPLAND	197		197						0.04			
2	D	4	274.31	274.40	PSS1/4B	FLAT - ORGANIC	II C 2, II A 3	WETLAND	471	471							0.09			
2	D	5A	274.40	274.65	PSS1/4B	FLAT - ORGANIC	II C 2, II A 3	WETLAND	1342	1342								0.25		
2	D	5A	274.65	274.66	U	N/A	II A 2	UPLAND	50		50							0.01		
2	D	5A	274.66	274.68	U	N/A	I A 3, II B 2	UPLAND	103		103							0.02		
2	D	5A	274.68	274.72	PSS1A	RIVERINE	II B 2	WETLAND	180	180								0.03		
2	D	5A	274.72	274.74	U	N/A	II C 2	UPLAND	111		111							0.02		
2	D	5A	274.74	274.76	PSS1A	RIVERINE	II B 2	WETLAND	103	103								0.02		
2	D	WB-S	274.76	274.77	PSS1A	RIVERINE	II B 2	WETLAND	53	53										0.01
2	D	WB-S	274.77	274.78	R3UBH	RIVERINE	NONE	WETLAND	62	62										0.01
2	D	WB-S	274.78	274.80	PSS1C	RIVERINE	II B 2	WETLAND	105	105										0.02
2	D	WB-S	274.80	274.80	R3UBH	RIVERINE	NONE	WETLAND	16	16										0.00
2	D	WB-S	274.80	274.81	PSS1C	RIVERINE	II B 2	WETLAND	64	64										0.01
2	D	5A	274.81	274.84	PSS1C	RIVERINE	II B 2	WETLAND	154	154								0.03		
2	D	5A	274.84	274.87	PUBA	RIVERINE	NONE	WETLAND	138	138								0.03		
2	D	5A	274.87	274.87	PSS1C	RIVERINE	II B 2	WETLAND	25	25								0.00		
2	D	5A	274.87	274.88	U	N/A	II C 2, II B 2	UPLAND	13		13							0.00		
2	D	4	274.88	274.89	U	N/A	II C 2, II B 2	UPLAND	50		50						0.01			
2	D	4	274.89	274.89	U	N/A	II B 2	UPLAND	42		42						0.01			
2	D	4	274.89	274.92	PEM1/SS3B	FLAT - ORGANIC	III A 2, II D 2	WETLAND	141	141							0.03			
2	D	4	274.92	274.93	PEM1F	DEPRESSIONAL	III A 3	WETLAND	46	46							0.01			
2	D	4	274.93	275.03	PEM1/SS3B	FLAT - ORGANIC	III A 2, II D 2	WETLAND	507	507							0.10			
2	D	4	275.03	275.03	PEM1/SS1E	SLOPE	III A 3, II C 2	WETLAND	17	17							0.00			
2	D	4	275.03	275.03	PSS1/4B	SLOPE	II C 2, II A 2	WETLAND	11	11							0.00			
2	D	4	275.03	275.04	PEM1/SS1E	SLOPE	III A 3, II C 2	WETLAND	28	28							0.01			
2	D	4	275.04	275.08	PSS1/4B	FLAT - ORGANIC	II C 2, II A 3	WETLAND	243	243							0.05			
2	D	4	275.08	275.12	PSS1/EM1B	SLOPE	II C 2, III A 2	WETLAND	222	222							0.04			
2	D	4	275.12	275.13	PEM1/SS3B	FLAT - ORGANIC	III A 2, II D 2	WETLAND	29	29							0.01			
2	D	4	275.13	275.14	PSS1/EM1B	SLOPE	II C 2, III A 2	WETLAND	30	30							0.01			
2	D	4	275.14	275.17	PSS1/EM1B	FLAT - ORGANIC	II C 2, III A 2	WETLAND	203	203							0.04			
2	D	4	275.17	275.22	PEM1/SS3B	FLAT - ORGANIC	III A 2, II D 2	WETLAND	223	223							0.04			
2	D	4	275.22	275.22	PSS1/EM1B	FLAT - ORGANIC	II C 2, III A 2	WETLAND	41	41							0.01			

SPREAD	SECTION	ROW MODE	FROM MP	TO MP	NWI CODE	HGM CLASS	VIERECK	DESCRIPTION	LINEAR FEET	WETLAND FEET	UPLAND FEET	DISTURBED FEET	Comments	Mode 1 - Ice Workpad (miles)	Mode 2 - Frost Pack (miles)	Mode 3 - Timber Mats	Mode 4 - Granular Workpad	Mode 5A - Grade	Mode 5B - Mountain Grade	Stream & Flood Plain Crossings
2	D	4	275.22	275.23	PSS1/EM1B	SLOPE	II C 2, III A 2	WETLAND	22	22							0.00			
2	D	4	275.23	275.23	PSS1/EM1B	FLAT - ORGANIC	II C 2, III A 2	WETLAND	32	32							0.01			
2	D	4	275.23	275.24	PSS1/EM1E	SLOPE	II C 2, III A 2	WETLAND	53	53							0.01			
2	D	4	275.24	275.27	PSS1/EM1B	FLAT - ORGANIC	II C 2, III A 2	WETLAND	136	136							0.03			
2	D	4	275.27	275.30	PSS1/EM1E	SLOPE	II C 2, III A 2	WETLAND	178	178							0.03			
2	D	4	275.30	275.32	PSS1/EM1B	FLAT - ORGANIC	II C 2, III A 2	WETLAND	87	87							0.02			
2	D	4	275.32	275.33	PSS1/EM1C	SLOPE	II C 2, III A 2	WETLAND	70	70							0.01			
2	D	4	275.33	275.49	PEM1/SS3B	FLAT - ORGANIC	III A 2, II D 2	WETLAND	838	838							0.16			
2	D	4	275.49	275.50	PSS1/EM1C	SLOPE	II C 2, III A 2	WETLAND	57	57							0.01			
2	D	4	275.50	275.51	PSS1/EM1B	FLAT - ORGANIC	II C 2, III A 2	WETLAND	40	40							0.01			
2	D	4	275.51	275.52	PSS1/EM1C	SLOPE	II C 2, III A 2	WETLAND	56	56							0.01			
2	D	4	275.52	275.53	PEM1/SS3B	FLAT - ORGANIC	III A 2, II D 2	WETLAND	31	31							0.01			
2	D	4	275.53	275.53	PSS1/EM1C	SLOPE	II C 2, III A 2	WETLAND	38	38							0.01			
2	D	4	275.53	275.56	PSS1/EM1B	FLAT - ORGANIC	II C 2, III A 2	WETLAND	114	114							0.02			
2	D	4	275.56	275.57	PSS1/EM1C	SLOPE	II C 2, III A 2	WETLAND	62	62							0.01			
2	D	4	275.57	275.59	PSS4/1B	FLAT - ORGANIC	II A 2, II C 2	WETLAND	135	135							0.03			
2	D	4	275.59	275.60	PEM1/SS3B	FLAT - ORGANIC	III A 2, II D 2	WETLAND	64	64							0.01			
2	D	4	275.60	275.61	PSS1/EM1C	SLOPE	II C 2, III A 2	WETLAND	51	51							0.01			
2	D	4	275.61	275.64	PEM1/SS3B	FLAT - ORGANIC	III A 2, II D 2	WETLAND	122	122							0.02			
2	D	4	275.64	275.70	PSS1/EM1C	SLOPE	II C 2, III A 2	WETLAND	314	314							0.06			
2	D	4	275.70	275.73	PEM1/SS3B	FLAT - ORGANIC	III A 2, II D 2	WETLAND	192	192							0.04			
2	D	4	275.73	275.75	PSS1/EM1C	SLOPE	II C 2, III A 2	WETLAND	112	112							0.02			
2	D	4	275.75	275.80	PEM1/SS3B	FLAT - ORGANIC	III A 2, II D 2	WETLAND	216	216							0.04			
2	D	4	275.80	275.80	PSS1C	RIVERINE	II B 2	WETLAND	9	9							0.00			
2	D	WB-S	275.80	275.81	PSS1C	RIVERINE	II B 2	WETLAND	50	50										0.01
2	D	WB-S	275.81	275.81	PSS1/3B	FLAT - ORGANIC	II C 2, II B 2	WETLAND	40	40										0.01
2	D	4	275.81	275.84	PSS1/3B	FLAT - ORGANIC	II C 2, II B 2	WETLAND	114	114							0.02			
2	D	4	275.84	275.84	PSS1/EM1C	SLOPE	II C 2, III A 3	WETLAND	43	43							0.01			
2	D	4	275.84	275.85	PSS1/3B	FLAT - ORGANIC	II C 2, II B 2	WETLAND	18	18							0.00			
2	D	4	275.85	275.86	PSS1/EM1C	SLOPE	II C 2, III A 3	WETLAND	84	84							0.02			
2	D	4	275.86	275.98	PSS1/EM1B	SLOPE	II C 2, III A 2	WETLAND	591	591							0.11			
2	D	4	275.98	277.32	PSS3/EM1B	FLAT - ORGANIC	II C 2, III A 2	WETLAND	7077	7077							1.34			
2	D	4	277.32	277.37	PSS1/EM1B	SLOPE	II C 2, III A 2	WETLAND	305	305							0.06			
2	D	4	277.37	277.39	PSS3/EM1B	FLAT - ORGANIC	II C 2, III A 2	WETLAND	68	68							0.01			
2	D	4	277.39	277.75	PSS1/EM1B	SLOPE	II C 2, III A 2	WETLAND	1895	1895							0.36			
2	D	4	277.75	277.78	PSS1/EM1B	FLAT - ORGANIC	II C 2, III A 2	WETLAND	197	197							0.04			
2	D	4	277.78	277.82	PSS1/EM1B	SLOPE	II C 2, III A 2	WETLAND	180	180							0.03			
2	D	4	277.82	277.85	PSS1/EM1B	SLOPE	II C 2, III A 2	WETLAND	161	161							0.03			
2	D	4	277.85	277.90	PSS1/EM1B	SLOPE	II C 2, III A 2	WETLAND	264	264							0.05			
2	D	4	277.90	277.94	PSS1/EM1B	SLOPE	II C 2, III A 2	WETLAND	241	241							0.05			
2	D	4	277.94	277.96	PSS1/EM1E	SLOPE	II C 2, III A 2	WETLAND	104	104							0.02			
2	D	4	277.96	278.00	PSS1/EM1B	SLOPE	II C 2, III A 2	WETLAND	190	190							0.04			
2	D	4	278.00	278.07	PSS1/EM1E	SLOPE	II C 2, III A 2	WETLAND	397	397							0.08			
2	D	4	278.07	278.16	PSS1/EM1B	SLOPE	II C 2, III A 2	WETLAND	478	478							0.09			
2	D	4	278.16	278.17	PSS1/EM1E	SLOPE	II C 2, III A 2	WETLAND	26	26							0.00			
2	D	4	278.17	278.19	PSS1/EM1B	FLAT - ORGANIC	II C 2, III A 2	WETLAND	96	96							0.02			
2	D	4	278.19	278.23	PSS1/EM1E	SLOPE	II C 2, III A 2	WETLAND	201	201							0.04			
2	D	4	278.23	278.24	PSS1/EM1B	FLAT - ORGANIC	II C 2, III A 2	WETLAND	74	74							0.01			
2	D	4	278.24	278.25	PSS1/EM1E	SLOPE	II C 2, III A 2	WETLAND	45	45							0.01			
2	D	4	278.25	278.27	PSS1/EM1B	FLAT - ORGANIC	II C 2, III A 2	WETLAND	135	135							0.03			
2	D	4	278.27	278.28	PSS1/EM1E	SLOPE	II C 2, III A 2	WETLAND	35	35							0.01			
2	D	4	278.28	278.31	PSS1/EM1B	FLAT - ORGANIC	II C 2, III A 2	WETLAND	142	142							0.03			
2	D	4	278.31	278.32	PSS1/EM1E	SLOPE	II C 2, III A 2	WETLAND	72	72							0.01			
2	D	4	278.32	278.33	PSS1/EM1B	FLAT - ORGANIC	II C 2, III A 2	WETLAND	75	75							0.01			
2	D	4	278.33	278.34	PSS1/EM1E	SLOPE	II C 2, III A 2	WETLAND	44	44							0.01			
2	D	4	278.34	278.42	PEM1/SS1B	FLAT - ORGANIC	III A 2, II C 2	WETLAND	415	415							0.08			
2	D	4	278.42	278.44	PEM1/SS1B	SLOPE	III A 2, II C 2	WETLAND	123	123							0.02			
2	D	4	278.44	278.55	PEM1/SS1B	FLAT - ORGANIC	III A 2, II C 2	WETLAND	556	556							0.11			
2	D	4	278.55	278.55	PEM1F	DEPRESSIONAL	III A 3	WETLAND	22	22							0.00			
2	D	4	278.55	278.56	PEM1/SS1B	FLAT - ORGANIC	III A 2, II C 2	WETLAND	4	4							0.00			
2	D	4	278.56	278.71	PSS1/EM1C	SLOPE	II C 2, III A 3	WETLAND	829	829							0.16			
2	D	WB-S	278.71	278.72	PSS1/EM1C	SLOPE	II C 2, III A 3	WETLAND	60	60										0.01
2	D	4	278.72	278.74	PSS1/EM1C	SLOPE	II C 2, III A 3	WETLAND	70	70							0.01			
2	D	4	278.74	278.76	PSS1/EM1B	FLAT - ORGANIC	II C 2, III A 2	WETLAND	133	133							0.03			
2	D	4	278.76	278.77	PSS1/EM1C	SLOPE	II C 2, III A 3	WETLAND	61	61							0.01			
2	D	4	278.77	278.82	PSS1/EM1B	SLOPE	II C 2, III A 2	WETLAND	264	264							0.05			
2	D	4	278.82	279.34	PSS1/EM1B	FLAT - ORGANIC	II C 2, III A 2	WETLAND	2732	2732							0.52			
2	D	4	279.34	279.38	PSS1/EM1C	SLOPE	II C 2, III A 3	WETLAND	219	219							0.04			
2	D	4	279.38	280.23	PSS1/EM1B	FLAT - ORGANIC	II C 2, III A 2	WETLAND	4457	4457							0.84			
2	D	4	280.23	280.60	U	N/A	III A 1	UPLAND	1957		1957						0.37			
2	D	4	280.60	280.60	PSS1/EM1C	SLOPE	II C 2, III A 2	WETLAND	14	14							0.00			
2	D	4	280.60	280.62	PSS1/EM1C	RIVERINE	II C 2, III A 2	WETLAND	84	84							0.02			

SPREAD	SECTION	ROW MODE	FROM MP	TO MP	NWI CODE	HGM CLASS	VIERECK	DESCRIPTION	LINEAR FEET	WETLAND FEET	UPLAND FEET	DISTURBED FEET	Comments	Mode 1 - Ice Workpad (miles)	Mode 2 - Frost Pack (miles)	Mode 3 - Timber Mats	Mode 4 - Granular Workpad	Mode 5A - Grade	Mode 5B - Mountain Grade	Stream & Flood Plain Crossings
2	D	WB-S	280.62	280.62	PSS1/EM1C	RIVERINE	II C 2, III A 2	WETLAND	14	14										0.00
2	D	WB-S	280.62	280.63	PSS1B	FLAT - ORGANIC	II C 2	WETLAND	76	76										0.01
2	D	4	280.63	281.12	PSS1B	FLAT - ORGANIC	II C 2	WETLAND	2569	2569							0.49			
2	D	4	281.12	281.12	U	N/A	II C 2	UPLAND	10		10						0.00			
2	D	4	281.12	281.22	U	N/A	I C 1	UPLAND	503		503						0.10			
2	D	4	281.22	281.28	PSS1/EM1B	FLAT - ORGANIC	II C 2, III A 2	WETLAND	318	318							0.06			
2	D	4	281.28	281.30	PEM1/SS1B	FLAT - ORGANIC	III A 2, II C 2	WETLAND	104	104							0.02			
2	D	4	281.30	281.30	PSS1/EM1C	RIVERINE	II C 2, III A 2	WETLAND	38	38							0.01			
2	D	5A	281.30	281.31	PSS1/EM1C	RIVERINE	II C 2, III A 2	WETLAND	63	63								0.01		
2	D	5A	281.31	281.33	U	N/A	I C 1	UPLAND	86		86							0.02		
2	D	5A	281.33	281.34	PSS1/EM1C	RIVERINE	II C 2, III A 2	WETLAND	60	60								0.01		
2	D	WB-S	281.34	281.35	PSS1/EM1C	RIVERINE	II C 2, III A 2	WETLAND	17	17										0.00
2	D	WB-S	281.35	281.35	R3UBH	RIVERINE	NONE	WETLAND	30	30										0.01
2	D	WB-S	281.35	281.36	R3USC	RIVERINE	NONE	WETLAND	21	21										0.00
2	D	WB-S	281.36	281.37	PSS1/EM1C	RIVERINE	II C 2, III A 3	WETLAND	51	51										0.01
2	D	5A	281.37	281.38	PSS1/EM1C	RIVERINE	II C 2, III A 3	WETLAND	102	102								0.02		
2	D	5A	281.38	281.43	PSS1/EM1B	FLAT - ORGANIC	II C 2, III A 2	WETLAND	217	217								0.04		
2	D	5A	281.43	281.43	PSS1/EM1B	SLOPE	II C 2, III A 2	WETLAND	24	24								0.00		
2	D	5A	281.43	281.43	PSS1/EM1B	SLOPE	II C 2, III A 2	WETLAND	17	17								0.00		
2	D	4	281.43	281.45	PSS1/EM1B	SLOPE	II C 2, III A 2	WETLAND	63	63							0.01			
2	E	4	281.45	281.47	U	N/A	II C 2	UPLAND	121		121						0.02			
2	E	4	281.47	281.49	PFO4/SS1B	FLAT - ORGANIC	I A 3, II B 2	WETLAND	116	116							0.02			
2	E	4	281.49	281.50	PSS1/EM1C	SLOPE	II C 2, III A 2	WETLAND	59	59							0.01			
2	E	4	281.50	281.51	PFO4/SS1B	FLAT - ORGANIC	I A 3, II B 2	WETLAND	42	42							0.01			
2	E	4	281.51	281.53	PSS1/EM1C	SLOPE	II C 2, III A 2	WETLAND	113	113							0.02			
2	E	4	281.53	281.56	PFO4/SS1B	FLAT - ORGANIC	I A 3, II B 2	WETLAND	172	172							0.03			
2	E	4	281.56	281.66	PEM1/SS1B	SLOPE	III A 2, II C 2	WETLAND	486	486							0.09			
2	E	4	281.66	281.66	PSS1/EM1C	SLOPE	II B 2, III A 3	WETLAND	27	27							0.01			
2	E	WB-S	281.66	281.67	PSS1/EM1C	SLOPE	II B 2, III A 3	WETLAND	60	60										0.01
2	E	4	281.67	281.68	PSS1/EM1C	SLOPE	II B 2, III A 3	WETLAND	18	18							0.00			
2	E	4	281.68	281.68	PEM1E	SLOPE	III A 3	WETLAND	29	29							0.01			
2	E	4	281.68	281.73	PEM1/SS1B	FLAT - ORGANIC	III A 2, II C 2	WETLAND	236	236							0.04			
2	E	4	281.73	281.77	PSS1B	FLAT - ORGANIC	II C 2	WETLAND	232	232							0.04			
2	E	4	281.77	281.86	PEM1/SS1B	FLAT - ORGANIC	III A 2, II C 2	WETLAND	473	473							0.09			
2	E	4	281.86	281.90	PSS1B	FLAT - ORGANIC	II C 2	WETLAND	223	223							0.04			
2	E	4	281.90	282.01	PEM1/SS1B	SLOPE	III A 2, II C 2	WETLAND	560	560							0.11			
2	E	4	282.01	282.11	PSS1B	FLAT - ORGANIC	II C 2	WETLAND	561	561							0.11			
2	E	4	282.11	282.12	PEM1/SS1B	SLOPE	III A 2, II C 2	WETLAND	57	57							0.01			
2	E	4	282.12	282.19	PSS1B	FLAT - ORGANIC	II C 2	WETLAND	357	357							0.07			
2	E	4	282.19	282.24	PEM1/SS1B	SLOPE	III A 2, II C 2	WETLAND	271	271							0.05			
2	E	4	282.24	282.49	PSS1/EM1B	FLAT - ORGANIC	II C 2, III A 2	WETLAND	1304	1304							0.25			
2	E	5A	282.49	282.68	PSS1/EM1B	FLAT - ORGANIC	II C 2, III A 2	WETLAND	1024	1024								0.19		
2	E	5A	282.68	282.79	U	N/A	III A 2, II C 2	UPLAND	572		572							0.11		
2	E	5A	282.79	282.83	PSS1/EM1B	FLAT - ORGANIC	II C 2, III A 2	WETLAND	203	203								0.04		
2	E	5A	282.83	282.99	U	N/A	II D 2, III A 2	UPLAND	837		837							0.16		
2	E	5A	282.99	283.00	PEM1/SS1B	FLAT - ORGANIC	III A 2, II C 2	WETLAND	58	58								0.01		
2	E	5A	283.00	283.02	U	N/A	II D 2, III A 2	UPLAND	80		80							0.02		
2	E	5A	283.02	283.02	PEM1/SS1B	FLAT - ORGANIC	III A 2, II C 2	WETLAND	9	9								0.00		
2	E	5A	283.02	283.04	U	N/A	II D 2, III A 2	UPLAND	120		120							0.02		
2	E	5A	283.04	283.04	PEM1/SS1B	FLAT - ORGANIC	III A 2, II C 2	WETLAND	19	19								0.00		
2	E	5A	283.04	283.05	U	N/A	II D 2, III A 2	UPLAND	22		22							0.00		
2	E	5A	283.05	283.06	PEM1/SS1B	FLAT - ORGANIC	III A 2, II C 2	WETLAND	64	64								0.01		
2	E	5A	283.06	283.07	U	N/A	II D 2, III A 2	UPLAND	58		58							0.01		
2	E	5A	283.07	283.08	PEM1/SS1B	FLAT - ORGANIC	III A 2, II C 2	WETLAND	24	24								0.00		
2	E	5A	283.08	283.10	U	N/A	II D 2, III A 2	UPLAND	102		102							0.02		
2	E	5A	283.10	283.11	PEM1/SS1B	FLAT - ORGANIC	III A 2, II C 2	WETLAND	83	83								0.02		
2	E	5A	283.11	283.11	U	N/A	II D 2, III A 2	UPLAND	14		14							0.00		
2	E	5A	283.11	283.12	PEM1/SS1B	FLAT - ORGANIC	III A 2, II C 2	WETLAND	27	27								0.01		
2	E	5A	283.12	283.12	U	N/A	II D 2, III A 2	UPLAND	32		32							0.01		
2	E	5A	283.12	283.13	PEM1/SS1B	FLAT - ORGANIC	III A 2, II C 2	WETLAND	34	34								0.01		
2	E	5A	283.13	283.14	U	N/A	II D 2, III A 2	UPLAND	34		34							0.01		
2	E	5A	283.14	283.14	PEM1/SS1B	FLAT - ORGANIC	III A 2, II C 2	WETLAND	26	26								0.00		
2	E	5A	283.14	283.29	U	N/A	II D 2, III A 2	UPLAND	800		800							0.15		
2	E	5A	283.29	283.34	PEM1/SS1B	FLAT - ORGANIC	III A 2, II C 2	WETLAND	223	223								0.04		
2	E	5A	283.34	283.34	U	N/A	II D 2, III A 2	UPLAND	16		16							0.00		
2	E	5A	283.34	283.35	PEM1/SS1B	FLAT - ORGANIC	III A 2, II C 2	WETLAND	56	56								0.01		
2	E	5A	283.35	283.39	U	N/A	II D 2, III A 2	UPLAND	196		196							0.04		
2	E	5A	283.39	283.48	U	N/A	II D 2, III A 2	UPLAND	476		476							0.09		
2	E	5A	283.48	283.67	U	N/A	II D 2, III A 2	UPLAND	1033		1033							0.20		
2	E	5A	283.67	283.68	D	N/A	NONE	DISTURBED	34			34						0.01		
2	E	5A	283.68	284.22	U	N/A	II D 2	UPLAND	2843		2843							0.54		
2	E	4	284.22	284.87	U	N/A	II D 2	UPLAND	3419		3419						0.65			

SPREAD	SECTION	ROW MODE	FROM MP	TO MP	NWI CODE	HGM CLASS	VIERECK	DESCRIPTION	LINEAR FEET	WETLAND FEET	UPLAND FEET	DISTURBED FEET	Comments	Mode 1 - Ice Workpad (miles)	Mode 2 - Frost Pack (miles)	Mode 3 - Timber Mats	Mode 4 - Granular Workpad	Mode 5A - Grade	Mode 5B - Mountain Grade	Stream & Flood Plain Crossings
2	E	4	284.87	284.92	PSS1/EM1B	FLAT - ORGANIC	II C 2, III A 2	WETLAND	310	310							0.06			
2	E	4	284.92	284.93	PSS1B	FLAT - ORGANIC	II B 2	WETLAND	46	46							0.01			
2	E	4	284.93	285.04	PSS1/EM1B	FLAT - ORGANIC	II C 2, III A 2	WETLAND	562	562							0.11			
2	E	4	285.04	285.07	PEM1/SS1E	SLOPE	III A 2, II C 2	WETLAND	186	186							0.04			
2	E	4	285.07	285.08	PSS1B	FLAT - ORGANIC	II C 2	WETLAND	21	21							0.00			
2	E	4	285.08	285.12	PEM1/SS1E	SLOPE	III A 2, II C 2	WETLAND	198	198							0.04			
2	E	4	285.12	285.55	PSS1/EM1B	FLAT - ORGANIC	II C 2, III A 2	WETLAND	2271	2271							0.43			
2	E	4	285.55	285.56	PSS1/EM1B	SLOPE	II C 2, III A 2	WETLAND	98	98							0.02			
2	E	4	285.56	285.58	PSS1/EM1B	FLAT - ORGANIC	II C 2, III A 2	WETLAND	78	78							0.01			
2	E	4	285.58	285.59	PEM1/SS1E	SLOPE	III A 2, II C 2	WETLAND	56	56							0.01			
2	E	4	285.59	285.60	PSS1/EM1B	FLAT - ORGANIC	II C 2, III A 2	WETLAND	36	36							0.01			
2	E	4	285.60	285.64	PEM1/SS1E	SLOPE	III A 2, II C 2	WETLAND	220	220							0.04			
2	E	4	285.64	285.70	PSS1/EM1B	FLAT - ORGANIC	II C 2, III A 2	WETLAND	325	325							0.06			
2	E	4	285.70	285.74	PEM1/SS1E	SLOPE	III A 2, II C 2	WETLAND	199	199							0.04			
2	E	4	285.74	285.84	PSS1/4B	FLAT - ORGANIC	II C 2, II A 3	WETLAND	561	561							0.11			
2	E	4	285.84	285.86	PEM1/SS1E	SLOPE	III A 2, II C 2	WETLAND	64	64							0.01			
2	E	4	285.86	285.86	PSS1/EM1C	RIVERINE	II B 2, III A 2	WETLAND	19	19							0.00			
2	E	WB-S	285.86	285.87	PSS1/EM1C	RIVERINE	II B 2, III A 2	WETLAND	42	42										0.01
2	E	WB-S	285.87	285.87	PEM1/SS1E	SLOPE	III A 2, II C 2	WETLAND	18	18										0.00
2	E	4	285.87	285.89	PEM1/SS1E	SLOPE	III A 2, II C 2	WETLAND	105	105							0.02			
2	E	4	285.89	285.98	PSS1/EM1B	FLAT - ORGANIC	II C 2, II A 3	WETLAND	486	486							0.09			
2	E	4	285.98	286.11	U	N/A	I B 3, II C 2	UPLAND	669		669						0.13			
2	E	4	286.11	286.19	PSS1/EM1B	FLAT - ORGANIC	II C 2, II A 3	WETLAND	400	400							0.08			
2	E	4	286.19	286.20	PSS1/EM1B	SLOPE	II C 2, III A 2	WETLAND	65	65							0.01			
2	E	4	286.20	286.24	PEM1/SS1B	FLAT - ORGANIC	III A 2, II C 2	WETLAND	200	200							0.04			
2	E	4	286.24	286.26	PSS1/4B	FLAT - ORGANIC	II C 2, II A 3	WETLAND	105	105							0.02			
2	E	4	286.26	286.28	PSS1/EM1B	SLOPE	II C 2, III A 2	WETLAND	109	109							0.02			
2	E	4	286.28	286.28	PSS1/EM1C	RIVERINE	II B 2, III A 1	WETLAND	21	21							0.00			
2	E	WB-S	286.28	286.29	PSS1/EM1C	RIVERINE	II B 2, III A 1	WETLAND	42	42										0.01
2	E	WB-S	286.29	286.29	PSS1/EM1B	SLOPE	II C 2, III A 2	WETLAND	18	18										0.00
2	E	4	286.29	286.33	PSS1/EM1B	SLOPE	II C 2, III A 2	WETLAND	217	217							0.04			
2	E	4	286.33	286.35	PSS1/EM1C	RIVERINE	II B 2, III A 1	WETLAND	81	81							0.02			
2	E	4	286.35	286.36	PEM1/SS1B	SLOPE	III A 2, II C 2	WETLAND	57	57							0.01			
2	E	4	286.36	286.38	PSS1/EM1C	SLOPE	II C 2, III A 2	WETLAND	104	104							0.02			
2	E	4	286.38	286.52	PSS1/3B	FLAT - ORGANIC	II C 2	WETLAND	734	734							0.14			
2	E	4	286.52	286.55	U	N/A	II B 2, III A 1	UPLAND	158		158						0.03			
2	E	4	286.55	286.56	PSS1/3B	FLAT - ORGANIC	II C 2	WETLAND	52	52							0.01			
2	E	4	286.56	286.59	U	N/A	II B 2, III A 1	UPLAND	183		183						0.03			
2	E	4	286.59	286.62	PSS1/3B	FLAT - ORGANIC	II C 2	WETLAND	150	150							0.03			
2	E	4	286.62	286.66	PSS4/1B	FLAT - ORGANIC	II A 2, II C 2	WETLAND	224	224							0.04			
2	E	4	286.66	286.67	U	N/A	II B 2, III A 1	UPLAND	59		59						0.01			
2	E	4	286.67	286.71	PSS1/3B	FLAT - ORGANIC	II C 2	WETLAND	169	169							0.03			
2	E	4	286.71	286.90	U	N/A	II B 2, III A 1	UPLAND	1020		1020						0.19			
2	E	4	286.90	286.92	PSS1/4B	FLAT - ORGANIC	II C 2, II A 3	WETLAND	113	113							0.02			
2	E	4	286.92	286.93	U	N/A	II B 2, III A 1	UPLAND	30		30						0.01			
2	E	4	286.93	286.97	PSS1/4B	FLAT - ORGANIC	II C 2, II A 3	WETLAND	218	218							0.04			
2	E	4	286.97	287.03	U	N/A	II B 2, III A 1	UPLAND	346		346						0.07			
2	E	4	287.03	287.10	PSS1/3B	FLAT - ORGANIC	II C 2	WETLAND	365	365							0.07			
2	E	4	287.10	287.39	U	N/A	II C 2, III A 1	UPLAND	1524		1524						0.29			
2	E	4	287.39	287.40	PSS1/4B	FLAT - ORGANIC	II C 2, II A 3	WETLAND	55	55							0.01			
2	E	4	287.40	287.44	U	N/A	II C 2, III A 1	UPLAND	185		185						0.04			
2	E	4	287.44	287.45	U	N/A	II B 2, III A 1	UPLAND	83		83						0.02			
2	E	4	287.45	287.47	U	N/A	II C 2, III A 1	UPLAND	102		102						0.02			
2	E	4	287.47	287.51	U	N/A	II B 2, III A 1	UPLAND	192		192						0.04			
2	E	5A	287.51	287.51	U	N/A	II B 2, III A 1	UPLAND	4		4							0.00		
2	E	5A	287.51	287.54	PEM1/SS1B	FLAT - ORGANIC	III A 2, II C 2	WETLAND	191	191								0.04		
2	E	5A	287.54	287.56	PSS4B	FLAT - ORGANIC	II A 2	WETLAND	58	58								0.01		
2	E	5A	287.56	287.59	PSS1/4B	FLAT - ORGANIC	II C 2, II A 3	WETLAND	177	177								0.03		
2	E	5A	287.59	287.85	U	N/A	II C 2, III A 1	UPLAND	1400		1400							0.27		
2	E	4	287.85	287.86	U	N/A	II C 2, III A 1	UPLAND	49		49						0.01			
2	E	4	287.86	287.89	PSS1/EM1B	FLAT - ORGANIC	II C 2, III A 2	WETLAND	118	118							0.02			
2	E	4	287.89	288.07	U	N/A	II C 2, III A 1	UPLAND	998		998						0.19			
2	E	4	288.07	288.09	PSS1/EM1B	FLAT - ORGANIC	II C 2, III A 2	WETLAND	60	60							0.01			
2	E	4	288.09	288.10	PSS1/EM1B	FLAT - ORGANIC	II C 2, III A 2	WETLAND	51	51							0.01			
2	E	4	288.10	288.10	PSS1/EM1B	FLAT - ORGANIC	II C 2, III A 2	WETLAND	42	42							0.01			
2	E	4	288.10	288.26	U	N/A	II C 2, III A 1	UPLAND	802		802						0.15			
2	E	4	288.26	288.34	PSS1/EM1B	FLAT - ORGANIC	II C 2, III A 2	WETLAND	423	423							0.08			
2	E	5A	288.34	288.39	PSS1/EM1B	FLAT - ORGANIC	II C 2, III A 2	WETLAND	307	307								0.06		
2	E	5A	288.39	288.47	U	N/A	I C 1	UPLAND	419		419							0.08		
2	E	WB-S	288.47	288.48	U	N/A	I C 1	UPLAND	31		31									0.01
2	E	WB-S	288.48	288.49	R3UBH	RIVERINE	NONE	WETLAND	61	61										0.01
2	E	WB-S	288.49	288.50	PSS1C	RIVERINE	II B 1	WETLAND	58	58										0.01

SPREAD	SECTION	ROW MODE	FROM MP	TO MP	NWI CODE	HGM CLASS	VIERECK	DESCRIPTION	LINEAR FEET	WETLAND FEET	UPLAND FEET	DISTURBED FEET	Comments	Mode 1 - Ice Workpad (miles)	Mode 2 - Frost Pack (miles)	Mode 3 - Timber Mats	Mode 4 - Granular Workpad	Mode 5A - Grade	Mode 5B - Mountain Grade	Stream & Flood Plain Crossings
2	E	5A	288.50	288.50	PSS1C	RIVERINE	II B 1	WETLAND	6	6								0.00		
2	E	5A	288.50	288.51	U	N/A	I C 1	UPLAND	22		22							0.00		
2	E	5A	288.51	288.77	PSS1B	FLAT - ORGANIC	II C 2	WETLAND	1414	1414								0.27		
2	E	5A	288.77	288.83	PEM1/SS1B	FLAT - ORGANIC	III A 2, II C 2	WETLAND	311	311								0.06		
2	E	5A	288.83	288.86	PSS1B	SLOPE	II C 2	WETLAND	135	135								0.03		
2	E	5A	288.86	288.86	PEM1/SS1B	FLAT - ORGANIC	III A 2, II C 2	WETLAND	2	2								0.00		
2	E	4	288.86	288.87	PEM1/SS1B	FLAT - ORGANIC	III A 2, II C 2	WETLAND	35	35							0.01			
2	E	4	288.87	288.92	PEM1/SS1B	SLOPE	III A 2, II C 2	WETLAND	298	298							0.06			
2	E	4	288.92	288.94	PSS1B	FLAT - ORGANIC	II C 2	WETLAND	109	109							0.02			
2	E	4	288.94	288.95	PSS1B	FLAT - ORGANIC	II C 2	WETLAND	44	44							0.01			
2	E	4	288.95	288.97	PEM1/SS1B	SLOPE	III A 2, II C 2	WETLAND	120	120							0.02			
2	E	4	288.97	289.07	PSS1B	FLAT - ORGANIC	II C 2	WETLAND	481	481							0.09			
2	E	4	289.07	289.08	PEM1/SS1B	SLOPE	III A 2, II C 2	WETLAND	58	58							0.01			
2	E	4	289.08	289.14	PSS1B	FLAT - ORGANIC	II C 2	WETLAND	353	353							0.07			
2	E	4	289.14	289.15	PSS1B	SLOPE	II C 2	WETLAND	35	35							0.01			
2	E	4	289.15	289.18	PEM1/SS1B	SLOPE	III A 2, II C 2	WETLAND	167	167							0.03			
2	E	4	289.18	289.19	PEM1/SS1C	SLOPE	III A 3, II C 2	WETLAND	35	35							0.01			
2	E	4	289.19	289.20	PEM1/SS1B	SLOPE	III A 2, II C 2	WETLAND	56	56							0.01			
2	E	4	289.20	289.21	PEM1/SS1C	SLOPE	III A 3, II C 2	WETLAND	53	53							0.01			
2	E	4	289.21	289.26	PEM1/SS1B	SLOPE	III A 2, II C 2	WETLAND	248	248							0.05			
2	E	4	289.26	289.34	PEM1C	SLOPE	III A 2, II C 2	WETLAND	446	446							0.08			
2	E	4	289.34	289.40	PEM1/SS1B	SLOPE	III A 2, II C 2	WETLAND	340	340							0.06			
2	E	4	289.40	289.75	PSS1B	FLAT - ORGANIC	II C 2	WETLAND	1802	1802							0.34			
2	E	4	289.75	289.75	U	N/A	I B 2, II B 2	UPLAND	15		15						0.00			
2	E	4	289.75	289.77	D	N/A	NONE	DISTURBED	137			137					0.03			
2	E	4	289.77	289.88	PSS4/1B	FLAT - ORGANIC	II A 2, II C 2	WETLAND	584	584							0.11			
2	E	4	289.88	289.93	PSS1/3B	DEPRESSIONAL	II C 2	WETLAND	255	255							0.05			
2	E	5A	289.93	289.96	PSS1/3B	DEPRESSIONAL	II C 2	WETLAND	147	147								0.03		
2	E	5A	289.96	290.01	PSS4/1B	FLAT - ORGANIC	II A 2, II C 2	WETLAND	275	275								0.05		
2	E	5A	290.01	290.02	U	N/A	I C 1	UPLAND	62		62							0.01		
2	E	5A	290.02	290.03	PSS1/EM1E	DEPRESSIONAL	II C 2, III A 2	WETLAND	51	51								0.01		
2	E	5A	290.03	290.05	PSS1B	DEPRESSIONAL	II B 1	WETLAND	95	95								0.02		
2	E	5A	290.05	290.06	PSS1/EM1E	DEPRESSIONAL	II C 2, III A 2	WETLAND	30	30								0.01		
2	E	5A	290.06	290.06	PEM1F	DEPRESSIONAL	III A 3	WETLAND	1	1								0.00		
2	E	3	290.06	290.06	PEM1F	DEPRESSIONAL	III A 3	WETLAND	18	18						0.00				
2	E	3	290.06	290.06	PSS1/4E	DEPRESSIONAL	II B 2, II A 3	WETLAND	12	12						0.00				
2	E	5A	290.06	290.07	PSS1/4E	DEPRESSIONAL	II B 2, II A 3	WETLAND	43	43								0.01		
2	E	5A	290.07	290.10	PSS1/EM1E	DEPRESSIONAL	II C 2, III A 2	WETLAND	136	136								0.03		
2	E	5A	290.10	290.10	PSS1/4E	DEPRESSIONAL	II B 2, II A 3	WETLAND	11	11								0.00		
2	E	5A	290.10	290.12	U	N/A	I C 1	UPLAND	110		110							0.02		
2	E	WB-S	290.12	290.13	U	N/A	I C 1	UPLAND	29		29									0.01
2	E	WB-S	290.13	290.13	R3UBH	RIVERINE	NONE	WETLAND	40	40										0.01
2	E	WB-S	290.13	290.15	U	N/A	I C 1	UPLAND	81		81									0.02
2	E	5A	290.15	290.26	U	N/A	I C 1	UPLAND	579		579							0.11		
2	E	5A	290.26	290.29	PSS1/4B	FLAT - ORGANIC	II C 2, II A 2	WETLAND	153	153								0.03		
2	E	5A	290.29	290.35	PSS4/1B	FLAT - ORGANIC	II A 2, II C 2	WETLAND	308	308								0.06		
2	E	5A	290.35	290.38	PSS1/EM1B	FLAT - ORGANIC	II C 2, III A 2	WETLAND	184	184								0.03		
2	E	5A	290.38	291.20	PSS4/3B	FLAT - ORGANIC	II A 2, II C 2	WETLAND	4348	4348								0.82		
2	E	5A	291.20	291.34	PSS4/1B	FLAT - ORGANIC	II A 2, II C 2	WETLAND	707	707								0.13		
2	E	5A	291.34	291.49	PSS3B	FLAT - ORGANIC	II C 2, III A 2	WETLAND	812	812								0.15		
2	E	5A	291.49	291.59	PSS4/1B	FLAT - ORGANIC	II A 2, II C 2	WETLAND	491	491								0.09		
2	E	5A	291.59	291.65	PSS3B	FLAT - ORGANIC	II C 2, III A 2	WETLAND	334	334								0.06		
2	E	5A	291.65	291.67	PSS4/1B	FLAT - ORGANIC	II A 2, II C 2	WETLAND	102	102								0.02		
2	E	5A	291.67	291.91	PSS3B	FLAT - ORGANIC	II C 2, III A 2	WETLAND	1293	1293								0.24		
2	E	5A	291.91	292.03	PSS4/1B	FLAT - ORGANIC	II A 2, II C 2	WETLAND	623	623								0.12		
2	E	5A	292.03	292.07	PSS3B	FLAT - ORGANIC	II C 2, III A 2	WETLAND	185	185								0.04		
2	E	5A	292.07	292.08	PSS4/1B	FLAT - ORGANIC	II A 2, II C 2	WETLAND	56	56								0.01		
2	E	5A	292.08	292.13	PSS3B	FLAT - ORGANIC	II C 2, III A 2	WETLAND	273	273								0.05		
2	E	5A	292.13	292.18	PSS4/1B	FLAT - ORGANIC	II A 2, II C 2	WETLAND	276	276								0.05		
2	E	5A	292.18	292.21	PSS3B	FLAT - ORGANIC	II C 2, III A 2	WETLAND	141	141								0.03		
2	E	5A	292.21	292.34	PSS4/1B	FLAT - ORGANIC	II A 2, II C 2	WETLAND	684	684								0.13		
2	E	5A	292.34	292.36	U	N/A	II B 1	UPLAND	100		100							0.02		
2	E	5A	292.36	292.91	PSS4/1B	FLAT - ORGANIC	II A 2, II C 2	WETLAND	2909	2909								0.55		
2	E	5A	292.91	292.96	PSS1/EM1B	FLAT - ORGANIC	II C 2, III A 2	WETLAND	259	259								0.05		
2	E	5A	292.96	293.05	PSS4/1B	FLAT - ORGANIC	II A 2, II C 2	WETLAND	503	503								0.10		
2	E	5A	293.05	293.07	PSS1/EM1B	FLAT - ORGANIC	II C 2, III A 2	WETLAND	113	113								0.02		
2	E	5A	293.07	293.11	PSS4/1B	FLAT - ORGANIC	II A 2, II C 2	WETLAND	191	191								0.04		
2	E	5A	293.11	293.12	PSS1/EM1B	FLAT - ORGANIC	II C 2, III A 2	WETLAND	68	68								0.01		
2	E	5A	293.12	293.17	PSS4/1B	FLAT - ORGANIC	II A 2, II C 2	WETLAND	258	258								0.05		
2	E	5A	293.17	293.20	PSS1/EM1B	FLAT - ORGANIC	II C 2, III A 2	WETLAND	140	140								0.03		
2	E	5A	293.20	293.21	PSS4/1B	FLAT - ORGANIC	II A 2, II C 2	WETLAND	82	82								0.02		
2	E	5A	293.21	293.28	PSS1/EM1B	FLAT - ORGANIC	II C 2, III A 2	WETLAND	334	334								0.06		

SPREAD	SECTION	ROW MODE	FROM MP	TO MP	NWI CODE	HGM CLASS	VIERECK	DESCRIPTION	LINEAR FEET	WETLAND FEET	UPLAND FEET	DISTURBED FEET	Comments	Mode 1 - Ice Workpad (miles)	Mode 2 - Frost Pack (miles)	Mode 3 - Timber Mats	Mode 4 - Granular Workpad	Mode 5A - Grade	Mode 5B - Mountain Grade	Stream & Flood Plain Crossings
2	E	5A	293.28	293.34	PSS4/1B	FLAT - ORGANIC	II A 2, II C 2	WETLAND	358	358								0.07		
2	E	5A	293.34	293.39	PSS1/EM1B	FLAT - ORGANIC	II C 2, III A 2	WETLAND	235	235								0.04		
2	E	5A	293.39	293.54	PSS4/1B	FLAT - ORGANIC	II A 2, II C 2	WETLAND	782	782								0.15		
2	E	5A	293.54	293.58	PSS1/EM1B	FLAT - ORGANIC	II C 2, III A 2	WETLAND	238	238								0.04		
2	E	4	293.58	293.69	PSS1/EM1B	FLAT - ORGANIC	II C 2, III A 2	WETLAND	588	588							0.11			
2	E	4	293.69	293.71	U	N/A	I C 1	UPLAND	70		70						0.01			
2	E	4	293.71	293.71	U	N/A	II B 2, I C 2	UPLAND	28		28						0.01			
2	E	4	293.71	293.72	PSS1/EM1C	RIVERINE	II B 2, III A 2	WETLAND	34	34							0.01			
2	E	WB-S	293.72	293.73	PSS1/EM1C	RIVERINE	II B 2, III A 2	WETLAND	60	60										0.01
2	E	4	293.73	293.73	PSS1/EM1C	RIVERINE	II B 2, III A 2	WETLAND	22	22							0.00			
2	E	4	293.73	293.76	PEM1/SS4B	FLAT - ORGANIC	III A 2, II A 3	WETLAND	149	149							0.03			
2	E	4	293.76	293.77	U	N/A	I C 1	UPLAND	40		40						0.01			
2	E	5A	293.77	294.07	U	N/A	I C 1	UPLAND	1608		1608							0.30		
2	E	5A	294.07	294.14	PSS1B	FLAT - ORGANIC	II D 2	WETLAND	334	334								0.06		
2	E	5A	294.14	294.16	U	N/A	I C 1	UPLAND	150		150							0.03		
2	E	5A	294.16	294.64	PSS1B	FLAT - ORGANIC	II D 2	WETLAND	2503	2503								0.47		
2	E	5A	294.64	295.08	U	N/A	III A 1, II C 2	UPLAND	2308		2308							0.44		
2	E	5A	295.08	295.14	PSS1B	FLAT - ORGANIC	II D 2	WETLAND	318	318								0.06		
2	E	5A	295.14	295.15	PSS1/EM1B	FLAT - ORGANIC	II C 2, III A 2	WETLAND	59	59								0.01		
2	E	5A	295.15	295.17	PSS1B	FLAT - ORGANIC	II D 2	WETLAND	95	95								0.02		
2	E	5A	295.17	295.70	U	N/A	II D, III A 1	UPLAND	2822		2822							0.53		
2	E	5A	295.70	295.71	U	N/A	II B 1	UPLAND	57		57							0.01		
2	E	5A	295.71	295.86	U	N/A	II D, III A 1	UPLAND	813		813							0.15		
2	E	5A	295.86	295.90	PSS1B	FLAT - ORGANIC	II D 2	WETLAND	200	200								0.04		
2	E	5A	295.90	296.24	U	N/A	II D 2, III A 1	UPLAND	1804		1804							0.34		
2	E	5A	296.24	296.68	U	N/A	II D 2, III A 1	UPLAND	2313		2313							0.44		
2	E	5A	296.68	297.04	U	N/A	I A 2	UPLAND	1899		1899							0.36		
2	E	5A	297.04	297.05	PSS1/4B	SLOPE	I A 3, II C 2	WETLAND	30	30								0.01		
2	E	5A	297.05	297.05	PSS1/4B	FLAT - ORGANIC	I A 3, II C 2	WETLAND	34	34								0.01		
2	E	5A	297.05	297.10	U	N/A	I A 2	UPLAND	245		245							0.05		
2	E	5A	297.10	297.16	PSS1/4B	SLOPE	I A 3, II C 2	WETLAND	308	308								0.06		
2	E	5A	297.16	297.17	U	N/A	I A 2	UPLAND	41		41							0.01		
2	E	4	297.17	297.18	U	N/A	I A 2	UPLAND	73		73						0.01			
2	E	4	297.18	297.21	PSS1/4B	FLAT - ORGANIC	I A 3, II C 2	WETLAND	146	146							0.03			
2	E	4	297.21	297.22	PSS1C	RIVERINE	II B 2, II C 2	WETLAND	51	51							0.01			
2	E	WB-S	297.22	297.22	PSS1C	RIVERINE	II B 2, II C 2	WETLAND	11	11										0.00
2	E	WB-S	297.22	297.23	PSS1/FO4C	RIVERINE	II B 2, I A 3	WETLAND	40	40										0.01
2	E	WB-S	297.23	297.23	PSS1/EM1B	FLAT - ORGANIC	II D 2, III A 2	WETLAND	8	8										0.00
2	E	4	297.23	297.31	PSS1/EM1B	FLAT - ORGANIC	II D 2, III A 2	WETLAND	426	426							0.08			
2	E	4	297.31	297.33	U	N/A	II C 2, II D 2	UPLAND	94		94						0.02			
2	E	4	297.33	297.36	PSS1/EM1B	FLAT - ORGANIC	II D 2, III A 2	WETLAND	151	151							0.03			
2	E	4	297.36	297.38	U	N/A	II C 2, II D 2	UPLAND	132		132						0.03			
2	E	4	297.38	297.86	PSS1/EM1B	FLAT - ORGANIC	II D 2, III A 2	WETLAND	2556	2556							0.48			
2	E	5A	297.86	297.87	PSS1/EM1B	FLAT - ORGANIC	II D 2, III A 2	WETLAND	15	15								0.00		
2	E	5A	297.87	298.05	U	N/A	II C 2, II B 2	UPLAND	966		966							0.18		
2	E	5A	298.05	298.73	U	N/A	I C 2	UPLAND	3609		3609							0.68		
2	E	4	298.73	298.76	U	N/A	I C 2	UPLAND	147		147						0.03			
2	E	4	298.76	298.77	PSS1/4B	FLAT - ORGANIC	II C 2, II A 3	WETLAND	41	41							0.01			
2	E	4	298.77	298.81	U	N/A	I C 1	UPLAND	232		232						0.04			
2	E	WB-S	298.81	298.82	U	N/A	I C 1	UPLAND	32		32									0.01
2	E	WB-S	298.82	298.84	R3UBH	RIVERINE	NONE	WETLAND	83	83										0.02
2	E	WB-S	298.84	298.85	PSS1C	RIVERINE	II B 2	WETLAND	65	65										0.01
2	E	4	298.85	298.85	PSS1C	RIVERINE	II B 2	WETLAND	31	31							0.01			
2	E	4	298.85	298.87	U	N/A	I C 1	UPLAND	87		87						0.02			
2	E	4	298.87	298.88	PSS1/EM1E	RIVERINE	II C 2, III A 2	WETLAND	78	78							0.01			
2	E	4	298.88	298.91	U	N/A	I C 1	UPLAND	146		146						0.03			
2	E	4	298.91	298.96	PSS1/EM1E	RIVERINE	II C 2, III A 2	WETLAND	247	247							0.05			
2	E	4	298.96	298.97	PSS1B	RIVERINE	II C 2	WETLAND	72	72							0.01			
2	E	4	298.97	299.05	PSS1/4B	FLAT - ORGANIC	II C 2, II A 2	WETLAND	420	420							0.08			
2	E	4	299.05	299.08	PSS1B	FLAT - ORGANIC	II C 2	WETLAND	127	127							0.02			
2	E	4	299.08	299.15	PSS1/4B	FLAT - ORGANIC	II C 2, II A 2	WETLAND	386	386							0.07			
2	E	4	299.15	299.22	PSS3B	FLAT - ORGANIC	II C 2, III A 2	WETLAND	367	367							0.07			
2	E	4	299.22	299.57	PSS3/EM1B	FLAT - ORGANIC	II C 2, III A 2	WETLAND	1880	1880							0.36			
2	E	5A	299.57	299.71	PSS3/EM1B	FLAT - ORGANIC	II C 2, III A 2	WETLAND	706	706								0.13		
2	E	5A	299.71	300.27	U	N/A	II B 2, II C 2	UPLAND	2971		2971							0.56		
2	E	5A	300.27	300.32	U	N/A	I C 1	UPLAND	259		259							0.05		
2	E	5A	300.32	300.33	PSS3/EM1B	RIVERINE	II C 2, III A 2	WETLAND	54	54								0.01		
2	E	WB-S	300.33	300.33	PSS3/EM1B	RIVERINE	II C 2, III A 2	WETLAND	23	23										0.00
2	E	WB-S	300.33	300.34	PSS1A	RIVERINE	II B 2, II C 2	WETLAND	6	6										0.00
2	E	WB-S	300.34	300.35	PSS1E	RIVERINE	II C 2, III A 2	WETLAND	61	61										0.01
2	E	4	300.35	300.36	PSS1E	RIVERINE	II C 2, III A 2	WETLAND	39	39							0.01			
2	E	4	300.36	300.36	U	N/A	I C 2, II B 2	UPLAND	44		44						0.01			

SPREAD	SECTION	ROW MODE	FROM MP	TO MP	NWI CODE	HGM CLASS	VIERECK	DESCRIPTION	LINEAR FEET	WETLAND FEET	UPLAND FEET	DISTURBED FEET	Comments	Mode 1 - Ice Workpad (miles)	Mode 2 - Frost Pack (miles)	Mode 3 - Timber Mats	Mode 4 - Granular Workpad	Mode 5A - Grade	Mode 5B - Mountain Grade	Stream & Flood Plain Crossings
2	E	4	300.36	300.38	PSS1E	RIVERINE	II C 2, III A 2	WETLAND	98	98							0.02			
2	E	4	300.38	300.39	U	N/A	I C 2, II B 2	UPLAND	39		39						0.01			
2	E	4	300.39	300.41	PEM1/SS1B	FLAT - ORGANIC	III A 2, II C 2	WETLAND	95	95							0.02			
2	E	4	300.41	300.54	PEM1/SS3B	FLAT - ORGANIC	II A 2, II C 2	WETLAND	705	705							0.13			
2	E	5A	300.54	300.58	PEM1/SS3B	FLAT - ORGANIC	II A 2, II C 2	WETLAND	207	207								0.04		
2	E	5A	300.58	300.62	U	N/A	II B 2, II C 2	UPLAND	200		200							0.04		
2	E	5A	300.62	300.63	PEM1/SS3B	FLAT - ORGANIC	II A 2, II C 2	WETLAND	44	44								0.01		
2	E	5A	300.63	300.63	U	N/A	II B 2, II C 2	UPLAND	28		28							0.01		
2	E	5A	300.63	300.65	PEM1/SS3B	FLAT - ORGANIC	II A 2, II C 2	WETLAND	91	91								0.02		
2	E	5A	300.65	300.72	U	N/A	II B 2, II C 2	UPLAND	357		357							0.07		
2	E	5A	300.72	300.78	U	N/A	I C 2	UPLAND	318		318							0.06		
2	E	5A	300.78	300.81	U	N/A	II B 2, II C 2	UPLAND	163		163							0.03		
2	E	5A	300.81	300.86	U	N/A	I C 2	UPLAND	289		289							0.05		
2	E	5A	300.86	300.91	U	N/A	II B 2, II C 2	UPLAND	232		232							0.04		
2	E	5A	300.91	300.91	U	N/A	I C 2	UPLAND	36		36							0.01		
2	E	5A	300.91	300.92	PSS1B	FLAT - ORGANIC	II C 2	WETLAND	59	59								0.01		
2	E	5A	300.92	301.05	U	N/A	I B 2	UPLAND	675		675							0.13		
2	E	5B	301.05	301.28	U	N/A	I B 2	UPLAND	1206		1206								0.23	
2	E	5B	301.28	301.46	U	N/A	I B 1	UPLAND	924		924								0.18	
2	E	5A	301.46	301.46	U	N/A	I B 1	UPLAND	46		46							0.01		
2	E	5A	301.46	301.48	U	N/A	I C 3, II C 2	UPLAND	62		62							0.01		
2	E	5A	301.48	301.48	PSS1/EM1B	SLOPE	II C 2, III A 2	WETLAND	42	42								0.01		
2	E	5A	301.48	301.51	PSS1/EM1E	SLOPE	II C 2, III A 3	WETLAND	130	130								0.02		
2	E	5A	301.51	301.54	PSS1/FO1B	SLOPE	II B 2, I B 3	WETLAND	140	140								0.03		
2	E	WB-S	301.54	301.54	PSS1/FO1B	SLOPE	II B 2, I B 3	WETLAND	3	3										0.00
2	E	WB-S	301.54	301.54	U	N/A	I C 2	UPLAND	23		23									0.00
2	E	WB-S	301.54	301.54	R3UBH	RIVERINE	NONE	WETLAND	8	8										0.00
2	E	WB-S	301.54	301.54	U	N/A	I C 3, II C 2	UPLAND	4		4									0.00
2	E	WB-S	301.54	301.55	PSS1/4B	SLOPE	II A 3, II C 2	WETLAND	35	35										0.01
2	E	WB-S	301.55	301.55	PSS3/4B	FLAT - ORGANIC	II A 2, II C 2	WETLAND	17	17										0.00
2	E	4	301.55	301.59	PSS3/4B	FLAT - ORGANIC	II A 2, II C 2	WETLAND	202	202							0.04			
2	E	4	301.59	301.60	U	N/A	II B 1	UPLAND	72		72						0.01			
2	E	4	301.60	301.68	PSS4/3B	FLAT - ORGANIC	II A 2, II C 2	WETLAND	382	382							0.07			
2	E	4	301.68	301.70	PFO4B	FLAT - ORGANIC	I A 1	WETLAND	105	105							0.02			
2	E	4	301.70	301.88	PSS1/4B	FLAT - ORGANIC	II C 2, II A 2	WETLAND	991	991							0.19			
2	E	4	301.88	301.90	U	N/A	I C 2	UPLAND	67		67						0.01			
2	E	4	301.90	301.93	PEM1/SS3B	FLAT - ORGANIC	III A 2, II C 2	WETLAND	173	173							0.03			
2	E	4	301.93	301.94	U	N/A	I A 3, II C 2	UPLAND	45		45						0.01			
2	E	4	301.94	301.97	U	N/A	I C 3, II B 2	UPLAND	168		168						0.03			
2	E	4	301.97	301.97	U	N/A	I A 3, II C 2	UPLAND	16		16						0.00			
2	E	4	301.97	301.99	PSS1/4B	FLAT - ORGANIC	II C 2, II A 2	WETLAND	102	102							0.02			
2	E	4	301.99	302.02	U	N/A	I C 3, II B 2	UPLAND	153		153						0.03			
2	E	4	302.02	302.02	PEM1/SS3B	FLAT - ORGANIC	III A 2, II C 2	WETLAND	13	13							0.00			
2	E	4	302.02	302.06	U	N/A	I C 3, II B 2	UPLAND	209		209						0.04			
2	E	4	302.06	302.07	U	N/A	I C 2	UPLAND	56		56						0.01			
2	E	4	302.07	302.10	U	N/A	I C 3, II B 2	UPLAND	113		113						0.02			
2	E	4	302.10	302.21	U	N/A	I C 3, II B 2	UPLAND	626		626						0.12			
2	E	4	302.21	302.27	U	N/A	I B 3, II B 2	UPLAND	293		293						0.06			
2	E	4	302.27	302.31	U	N/A	II B 1	UPLAND	219		219						0.04			
2	E	4	302.31	302.34	PSS1/EM1B	FLAT - ORGANIC	II D 2, III A 2	WETLAND	177	177							0.03			
2	E	4	302.34	302.42	PSS1B	SLOPE	II B 1	WETLAND	395	395							0.07			
2	E	4	302.42	302.43	U	N/A	II B 1	UPLAND	32		32						0.01			
2	E	4	302.43	302.49	PSS1B	SLOPE	II B 1	WETLAND	367	367							0.07			
2	E	4	302.49	302.65	PSS1/EM1B	FLAT - ORGANIC	II D 2, III A 2	WETLAND	813	813							0.15			
2	E	5A	302.65	302.97	PSS1/EM1B	FLAT - ORGANIC	II D 2, III A 2	WETLAND	1687	1687								0.32		
2	E	5A	302.97	303.03	U	N/A	II B 1	UPLAND	300		300							0.06		
2	E	5A	303.03	303.61	PSS1/EM1B	FLAT - ORGANIC	II D 2, III A 2	WETLAND	3072	3072								0.58		
2	E	5A	303.61	304.30	PSS1/EM1B	FLAT - ORGANIC	II D, III A 2	WETLAND	3656	3656								0.69		
2	E	5A	304.30	304.47	PSS4/1B	FLAT - ORGANIC	II A 2, II C 2	WETLAND	875	875								0.17		
2	E	5A	304.47	304.49	U	N/A	I C 1	UPLAND	143		143							0.03		
2	E	5A	304.49	304.53	PSS4/1B	FLAT - ORGANIC	II A 2, II C 2	WETLAND	185	185								0.04		
2	E	5A	304.53	304.59	U	N/A	I B 1	UPLAND	335		335							0.06		
2	E	5A	304.59	304.81	U	N/A	I B 2	UPLAND	1183		1183							0.22		
2	E	5A	304.81	304.82	U	N/A	II B 1, II B 2	UPLAND	22		22							0.00		
2	E	WB-S	304.82	304.82	U	N/A	II B 1, II B 2	UPLAND	9		9									0.00
2	E	WB-S	304.82	304.82	PSS1C	RIVERINE	II B 1	WETLAND	19	19										0.00
2	E	WB-S	304.82	304.83	U	N/A	II B 1, II B 2	UPLAND	15		15									0.00
2	E	WB-S	304.83	304.83	U	N/A	I A 3, II C 2	UPLAND	17		17									0.00
2	E	5A	304.83	304.83	U	N/A	I A 3, II C 2	UPLAND	23		23							0.00		
2	E	5A	304.83	304.93	U	N/A	II C 2, II B 2	UPLAND	500		500							0.09		
2	E	5A	304.93	305.01	PSS1/EM1B	FLAT - ORGANIC	II D 2, III A 2	WETLAND	413	413								0.08		
2	E	5A	305.01	305.16	U	N/A	II C 2, II B 2	UPLAND	790		790							0.15		

SPREAD	SECTION	ROW MODE	FROM MP	TO MP	NWI CODE	HGM CLASS	VIERECK	DESCRIPTION	LINEAR FEET	WETLAND FEET	UPLAND FEET	DISTURBED FEET	Comments	Mode 1 - Ice Workpad (miles)	Mode 2 - Frost Pack (miles)	Mode 3 - Timber Mats	Mode 4 - Granular Workpad	Mode 5A - Grade	Mode 5B - Mountain Grade	Stream & Flood Plain Crossings
2	E	5A	305.16	305.23	U	N/A	I B 2, II B 2	UPLAND	383		383							0.07		
2	E	5A	305.23	305.23	U	N/A	I A3, II B 2	UPLAND	23		23							0.00		
2	E	5A	305.23	305.26	PSS1C	SLOPE	II B 1	WETLAND	117	117								0.02		
2	E	WB-S	305.26	305.27	PSS1C	SLOPE	II B 1	WETLAND	52	52										0.01
2	E	WB-S	305.27	305.27	U	N/A	II C 2, II D 2	UPLAND	8		8									0.00
2	E	4	305.27	305.32	U	N/A	II C 2, II D 2	UPLAND	263		263						0.05			
2	E	4	305.32	305.43	PSS1/EM1B	FLAT - ORGANIC	II D 2, III A 2	WETLAND	590	590							0.11			
2	E	4	305.43	305.43	U	N/A	II C 2, II D 2	UPLAND	28		28						0.01			
2	E	4	305.43	305.46	PSS1/EM1B	FLAT - ORGANIC	II D 2, III A 2	WETLAND	139	139							0.03			
2	E	5A	305.46	305.48	PSS1/EM1B	FLAT - ORGANIC	II D 2, III A 2	WETLAND	82	82								0.02		
2	E	5A	305.48	305.50	U	N/A	II C 2, II D 2	UPLAND	146		146							0.03		
2	E	5A	305.50	305.51	U	N/A	II B 2, II C 2	UPLAND	45		45							0.01		
2	E	5A	305.51	305.52	U	N/A	II C 2, II D 2	UPLAND	37		37							0.01		
2	E	5A	305.52	305.66	U	N/A	II B 2, II C 2	UPLAND	754		754							0.14		
2	E	5A	305.66	305.67	PSS1/EM1C	SLOPE	II B 2, III A 3	WETLAND	60	60								0.01		
2	E	5A	305.67	305.69	PSS1C	SLOPE	II B 2	WETLAND	62	62								0.01		
2	E	5A	305.69	305.69	PSS1/EM1C	SLOPE	II B 2, III A 3	WETLAND	16	16								0.00		
2	E	5A	305.69	305.70	PSS1C	SLOPE	II B 2	WETLAND	55	55								0.01		
2	E	5A	305.70	305.75	PSS1/EM1B	FLAT - ORGANIC	II D 2, III A 2	WETLAND	244	244								0.05		
2	E	5A	305.75	305.77	U	N/A	I C 3, II C 2	UPLAND	140		140							0.03		
2	E	5A	305.77	305.79	D	N/A	II B 1, II B 2	DISTURBED	113			113						0.02		
2	E	5A	305.79	305.82	PSS1/EM1B	FLAT - ORGANIC	II D 2, III A 2	WETLAND	135	135								0.03		
2	E	5A	305.82	305.84	U	N/A	II D 2, II B 2	UPLAND	115		115							0.02		
2	E	5A	305.84	305.86	PSS1/EM1B	FLAT - ORGANIC	II D 2, III A 2	WETLAND	102	102								0.02		
2	E	5A	305.86	305.90	U	N/A	II D 2, II C 2	UPLAND	190		190							0.04		
2	E	5A	305.90	305.92	PSS1/EM1B	FLAT - ORGANIC	II D 2, III A 2	WETLAND	118	118								0.02		
2	E	5A	305.92	305.96	U	N/A	II D 2, II B 2	UPLAND	247		247							0.05		
2	E	5A	305.96	306.09	PSS1/EM1B	FLAT - ORGANIC	II D 2, III A 2	WETLAND	685	685								0.13		
2	E	5A	306.09	306.11	PSS1/EM1C	SLOPE	II C 2, III A 3	WETLAND	66	66								0.01		
2	E	5A	306.11	306.17	PSS1/EM1B	FLAT - ORGANIC	II D 2, III A 2	WETLAND	312	312								0.06		
2	E	5A	306.17	306.18	U	N/A	II C 2, II B 2	UPLAND	47		47							0.01		
2	E	5A	306.18	306.22	PSS1/EM1B	FLAT - ORGANIC	II D 2, III A 2	WETLAND	238	238								0.05		
2	E	5A	306.22	306.23	U	N/A	II C 2, II B 2	UPLAND	75		75							0.01		
2	E	5A	306.23	306.29	PSS1/EM1B	FLAT - ORGANIC	II D 2, III A 2	WETLAND	306	306								0.06		
2	E	5A	306.29	306.33	U	N/A	II C 2, II B 2	UPLAND	218		218							0.04		
2	E	5A	306.33	306.40	PSS1/EM1B	FLAT - ORGANIC	II D 2, III A 2	WETLAND	342	342								0.06		
2	E	4	306.40	306.87	PSS1/EM1B	FLAT - ORGANIC	II D 2, III A 2	WETLAND	2486	2486							0.47			
2	E	4	306.87	306.88	D	N/A	NONE	DISTURBED	55			55					0.01			
2	E	4	306.88	307.11	PSS1/EM1B	FLAT - ORGANIC	II C 2, III A 2	WETLAND	1211	1211							0.23			
2	E	4	307.11	307.11	PSS1/4B	FLAT - ORGANIC	II B 2, II A 2	WETLAND	24	24							0.00			
2	E	4	307.11	307.12	PSS1C	RIVERINE	II B 1	WETLAND	33	33							0.01			
2	E	WB-S	307.12	307.12	PSS1C	RIVERINE	II B 1	WETLAND	10	10										0.00
2	E	WB-S	307.12	307.14	R3UBH	RIVERINE	NONE	WETLAND	85	85										0.02
2	E	WB-S	307.14	307.14	PSS1C	RIVERINE	II B 1	WETLAND	25	25										0.00
2	E	4	307.14	307.15	PSS1C	RIVERINE	II B 1	WETLAND	15	15							0.00			
2	E	4	307.15	307.59	PSS1/EM1B	FLAT - ORGANIC	II C 2, III A 2	WETLAND	2333	2333							0.44			
2	E	4	307.59	307.66	U	N/A	II D 2, III A 2	UPLAND	402		402						0.08			
2	E	4	307.66	307.72	U	N/A	I A 3, II B 2	UPLAND	271		271						0.05			
2	E	4	307.72	307.82	U	N/A	II D 2, III A 2	UPLAND	567		567						0.11			
2	E	4	307.82	307.83	U	N/A	I A 3, II B 2	UPLAND	36		36						0.01			
2	E	4	307.83	307.90	U	N/A	II D 2, III A 2	UPLAND	388		388						0.07			
2	E	4	307.90	307.96	U	N/A	I A 3, II B 2	UPLAND	283		283						0.05			
2	E	4	307.96	308.04	U	N/A	II D 2, III A 2	UPLAND	432		432						0.08			
2	E	4	308.04	308.28	PSS1/EM1B	FLAT - ORGANIC	II D 2, III A 2	WETLAND	1254	1254							0.24			
2	E	4	308.28	308.31	U	N/A	II D 2, II B 2	UPLAND	172		172						0.03			
2	E	4	308.31	308.34	PSS1/EM1B	FLAT - ORGANIC	II D 2, III A 2	WETLAND	166	166							0.03			
2	E	4	308.34	308.42	U	N/A	II D 2, II B 2	UPLAND	401		401						0.08			
2	E	4	308.42	308.68	PSS1/EM1B	FLAT - ORGANIC	II D 2, III A 2	WETLAND	1417	1417							0.27			
2	E	4	308.68	308.72	U	N/A	II D 2, III A 2	UPLAND	170		170						0.03			
2	E	4	308.72	308.73	PSS1/EM1B	FLAT - ORGANIC	II D 2, III A 2	WETLAND	93	93							0.02			
2	E	4	308.73	308.75	U	N/A	II D 2, III A 2	UPLAND	89		89						0.02			
2	E	4	308.75	309.00	U	N/A	I A 3, II C 2	UPLAND	1328		1328						0.25			
2	E	4	309.00	309.01	PSS1/EM1B	FLAT - ORGANIC	II D 2, III A 2	WETLAND	53	53							0.01			
2	E	4	309.01	309.50	U	N/A	III A 2, II C 2	UPLAND	2555		2555						0.48			
2	E	4	309.50	309.62	PSS1/EM1B	FLAT - ORGANIC	II D 2, III A 2	WETLAND	631	631							0.12			
2	E	4	309.62	309.64	PSS1/EM1C	SLOPE	II C 2, III A 2	WETLAND	125	125							0.02			
2	E	4	309.64	309.92	PSS1/EM1B	FLAT - ORGANIC	II D 2, III A 2	WETLAND	1494	1494							0.28			
2	E	4	309.92	309.96	PEM1/SS1B	SLOPE	III A 2, II C 2	WETLAND	215	215							0.04			
2	E	4	309.96	309.99	PSS1/EM1B	FLAT - ORGANIC	II D 2, III A 2	WETLAND	137	137							0.03			
2	E	4	309.99	310.00	PEM1/SS1B	SLOPE	III A 2, II C 2	WETLAND	52	52							0.01			
2	E	4	310.00	310.05	PSS1/EM1B	FLAT - ORGANIC	II D 2, III A 2	WETLAND	280	280							0.05			
2	E	4	310.05	310.07	PEM1/SS1B	SLOPE	III A 2, II C 2	WETLAND	110	110							0.02			

SPREAD	SECTION	ROW MODE	FROM MP	TO MP	NWI CODE	HGM CLASS	VIERECK	DESCRIPTION	LINEAR FEET	WETLAND FEET	UPLAND FEET	DISTURBED FEET	Comments	Mode 1 - Ice Workpad (miles)	Mode 2 - Frost Pack (miles)	Mode 3 - Timber Mats	Mode 4 - Granular Workpad	Mode 5A - Grade	Mode 5B - Mountain Grade	Stream & Flood Plain Crossings
2	E	4	310.07	310.13	PSS1/EM1B	FLAT - ORGANIC	II D 2, III A 2	WETLAND	326	326							0.06			
2	E	4	310.13	310.15	PSS1B	SLOPE	II C 2	WETLAND	72	72							0.01			
2	E	4	310.15	310.17	PEM1/SS1B	FLAT - ORGANIC	III A 2, II C 2	WETLAND	142	142							0.03			
2	E	4	310.17	310.20	PSS1/EM1C	RIVERINE	II C 2, III A 2	WETLAND	126	126							0.02			
2	E	4	310.20	310.20	PSS1A	RIVERINE	II B 2	WETLAND	5	5							0.00			
2	E	WB-S	310.20	310.22	PSS1A	RIVERINE	II B 2	WETLAND	90	90										0.02
2	E	4	310.22	310.22	PSS1A	RIVERINE	II B 2	WETLAND	3	3							0.00			
2	E	4	310.22	310.29	PSS1/EM1B	FLAT - ORGANIC	II C 2, III A 2	WETLAND	364	364							0.07			
2	E	4	310.29	310.39	PEM1/SS1B	FLAT - ORGANIC	III A 2, II D 2	WETLAND	527	527							0.10			
2	E	4	310.39	310.42	PEM1/SS1C	SLOPE	III A 2, II D 2	WETLAND	188	188							0.04			
2	E	4	310.42	310.57	PEM1/SS1B	FLAT - ORGANIC	III A 2, II D 2	WETLAND	765	765							0.14			
2	E	4	310.57	310.67	PSS1/EM1B	SLOPE	II D 2, III A 2	WETLAND	525	525							0.10			
2	E	4	310.67	310.68	D	N/A	NONE	DISTURBED	74			74					0.01			
2	E	4	310.68	310.73	PSS1/EM1B	SLOPE	II D 2, III A 2	WETLAND	278	278							0.05			
2	E	4	310.73	310.76	PSS1/EM1B	FLAT - ORGANIC	II D 2, III A 2	WETLAND	153	153							0.03			
2	E	4	310.76	310.76	U	N/A	I C 1	UPLAND	16		16						0.00			
2	E	4	310.76	310.78	D	N/A	NONE	DISTURBED	88			88					0.02			
2	E	4	310.78	311.06	PSS1/EM1B	FLAT - ORGANIC	II D 2, III A 2	WETLAND	1481	1481							0.28			
2	E	4	311.06	311.10	U	N/A	II C 2, III A 1	UPLAND	180		180						0.03			
2	E	4	311.10	311.10	PSS1/EM1B	FLAT - ORGANIC	II D 2, III A 2	WETLAND	8	8							0.00			
2	E	4	311.10	311.14	U	N/A	II C 2, III A 1	UPLAND	209		209						0.04			
2	E	5A	311.14	312.38	U	N/A	II C 2, III A 1	UPLAND	6540		6540							1.24		
2	E	4	312.38	312.38	U	N/A	II C 2, III A 1	UPLAND	38		38						0.01			
2	E	4	312.38	312.42	PSS1/EM1B	FLAT - ORGANIC	II D 2, III A 2	WETLAND	172	172							0.03			
2	E	4	312.42	312.45	U	N/A	II C 2, III A 1	UPLAND	193		193						0.04			
2	E	4	312.45	312.46	PSS1/EM1B	SLOPE	II C 2, III A 2	WETLAND	64	64							0.01			
2	E	4	312.46	312.61	U	N/A	II D 2, III A 1	UPLAND	750		750						0.14			
2	E	4	312.61	312.61	D	N/A	NONE	DISTURBED	46			46					0.01			
2	E	4	312.61	312.69	U	N/A	II C 2, III A 2	UPLAND	416		416						0.08			
2	E	WB-S	312.69	312.69	U	N/A	II C 2, III A 2	UPLAND	6		6									0.00
2	E	WB-S	312.69	312.71	PSS1C	RIVERINE	II C 2, II D	WETLAND	84	84										0.02
2	E	4	312.71	312.75	PSS1C	RIVERINE	II C 2, II D	WETLAND	216	216							0.04			
2	E	4	312.75	312.77	PSS1/EM1B	SLOPE	II C 2, III A 2	WETLAND	93	93							0.02			
2	E	4	312.77	312.86	PSS1/EM1B	FLAT - ORGANIC	II C 2, III A 2	WETLAND	470	470							0.09			
2	E	4	312.86	312.87	U	N/A	II C 2, III A 2	UPLAND	40		40						0.01			
2	E	4	312.87	312.88	PSS1/EM1B	FLAT - ORGANIC	II C 2, III A 2	WETLAND	69	69							0.01			
2	E	4	312.88	312.90	U	N/A	II C 2, III A 2	UPLAND	86		86						0.02			
2	E	4	312.90	312.90	PSS1/EM1B	FLAT - ORGANIC	II C 2, III A 2	WETLAND	29	29							0.01			
2	E	4	312.90	312.92	U	N/A	II C 2, III A 2	UPLAND	121		121						0.02			
2	E	4	312.92	312.93	PSS1/EM1B	FLAT - ORGANIC	II C 2, III A 2	WETLAND	52	52							0.01			
2	E	4	312.93	313.12	U	N/A	II C 2, III A 2	UPLAND	969		969						0.18			
2	E	4	313.12	313.12	PSS1C	RIVERINE	II C 2, II D	WETLAND	16	16							0.00			
2	E	WB-S	313.12	313.13	PSS1C	RIVERINE	II C 2, II D	WETLAND	60	60										0.01
2	E	5A	313.13	313.14	PSS1C	RIVERINE	II C 2, II D	WETLAND	64	64								0.01		
2	E	5A	313.14	313.15	U	N/A	III A 1, II A 2	UPLAND	47		47							0.01		
2	E	5A	313.15	313.16	PSS1C	RIVERINE	II C 2, II D	WETLAND	22	22								0.00		
2	E	5A	313.16	313.31	U	N/A	III A 1, II A 2	UPLAND	819		819							0.16		
2	E	5A	313.31	313.53	U	N/A	II C, II B 2	UPLAND	1140		1140							0.22		
2	E	5A	313.53	313.60	PSS1/EM1B	FLAT - ORGANIC	II B 2, II A 2	WETLAND	383	383								0.07		
2	E	5A	313.60	313.68	U	N/A	II C, II B 2	UPLAND	401		401							0.08		
2	E	5A	313.68	313.69	PSS1C	SLOPE	II B 2, II C 2	WETLAND	65	65								0.01		
2	E	5A	313.69	313.90	U	N/A	II C 2, III A 2	UPLAND	1111		1111							0.21		
2	E	5A	313.90	313.91	U	N/A	II B 2, II C 2	UPLAND	68		68							0.01		
2	E	5A	313.91	314.04	PSS1/EM1B	FLAT - ORGANIC	II D 2, III A 2	WETLAND	679	679								0.13		
2	E	5A	314.04	314.06	U	N/A	II B 2, III A 1	UPLAND	105		105							0.02		
2	E	5A	314.06	314.08	PSS1/EM1B	FLAT - ORGANIC	II D 2, III A 2	WETLAND	121	121								0.02		
2	E	5A	314.08	314.11	U	N/A	II B 2, III A 1	UPLAND	124		124							0.02		
2	E	5A	314.11	314.26	PSS1/EM1B	FLAT - ORGANIC	II D 2, III A 2	WETLAND	810	810								0.15		
2	E	5A	314.26	314.28	U	N/A	II C 2, III A 1	UPLAND	105		105							0.02		
2	E	5A	314.28	314.29	PSS1/EM1B	FLAT - ORGANIC	II D 2, III A 2	WETLAND	41	41								0.01		
2	E	5A	314.29	314.31	U	N/A	II D 2, II C 2	UPLAND	138		138							0.03		
2	E	5A	314.31	314.36	PSS1/EM1B	FLAT - ORGANIC	II D 2, III A 2	WETLAND	267	267								0.05		
2	E	5A	314.36	314.38	U	N/A	III A 1, II C 2	UPLAND	109		109							0.02		
2	E	5A	314.38	314.68	PSS1/EM1B	FLAT - ORGANIC	II D 2, III A 2	WETLAND	1564	1564								0.30		
2	E	5A	314.68	314.69	U	N/A	III A 1, II C 2	UPLAND	43		43							0.01		
2	E	5A	314.69	314.92	PSS1/EM1B	FLAT - ORGANIC	II D 2, III A 2	WETLAND	1233	1233								0.23		
2	E	5A	314.92	314.93	U	N/A	III A 1, II C 2	UPLAND	48		48							0.01		
2	F	5A	314.93	314.94	PSS1/EM1B	FLAT - ORGANIC	II D 2, III A 2	WETLAND	43	43								0.01		
2	F	5A	314.94	315.10	PSS1B	FLAT - ORGANIC	II C 2, III A 2	WETLAND	864	864								0.16		
2	F	5A	315.10	315.12	U	N/A	II C 2, III A 1	UPLAND	75		75							0.01		
2	F	5A	315.12	315.31	PSS1B	FLAT - ORGANIC	II C 2, III A 2	WETLAND	1016	1016								0.19		
2	F	5A	315.31	315.49	PSS1/EM1B	FLAT - ORGANIC	II C 2, III A 2	WETLAND	960	960								0.18		

SPREAD	SECTION	ROW MODE	FROM MP	TO MP	NWI CODE	HGM CLASS	VIERECK	DESCRIPTION	LINEAR FEET	WETLAND FEET	UPLAND FEET	DISTURBED FEET	Comments	Mode 1 - Ice Workpad (miles)	Mode 2 - Frost Pack (miles)	Mode 3 - Timber Mats	Mode 4 - Granular Workpad	Mode 5A - Grade	Mode 5B - Mountain Grade	Stream & Flood Plain Crossings
2	F	5A	315.49	316.01	U	N/A	III A 1, II C 2	UPLAND	2711		2711							0.51		
2	F	5A	316.01	316.05	PSS1B	FLAT - ORGANIC	II C 2	WETLAND	212	212								0.04		
2	F	5A	316.05	316.06	PSS1/EM1C	SLOPE	II C 2, III A 2	WETLAND	73	73								0.01		
2	F	5A	316.06	316.10	PSS1B	FLAT - ORGANIC	II C 2	WETLAND	229	229								0.04		
2	F	5A	316.10	316.11	PSS1C	RIVERINE	II B 1, II C 1	WETLAND	60	60								0.01		
2	F	WB-S	316.11	316.12	PSS1C	RIVERINE	II B 1, II C 1	WETLAND	23	23										0.00
2	F	WB-S	316.12	316.13	PSS1/EM1B	FLAT - ORGANIC	II C 2, III A 2	WETLAND	37	37										0.01
2	F	5A	316.13	316.13	PSS1/EM1B	FLAT - ORGANIC	II C 2, III A 2	WETLAND	34	34								0.01		
2	F	5A	316.13	316.20	U	N/A	II C 2, III A 1	UPLAND	374		374							0.07		
2	F	5A	316.20	316.36	PSS1/EM1B	FLAT - ORGANIC	II C 2, III A 2	WETLAND	821	821								0.16		
2	F	5A	316.36	316.43	U	N/A	III A 1, II C 2	UPLAND	400		400							0.08		
2	F	5A	316.43	316.46	PSS1/EM1B	FLAT - ORGANIC	II C 2, III A 2	WETLAND	133	133								0.03		
2	F	5A	316.46	316.47	U	N/A	III A 1, II C 2	UPLAND	45		45							0.01		
2	F	5A	316.47	316.48	PSS1/EM1B	FLAT - ORGANIC	II C 2, III A 2	WETLAND	83	83								0.02		
2	F	4	316.48	316.49	PSS1/EM1B	FLAT - ORGANIC	II C 2, III A 2	WETLAND	43	43							0.01			
2	F	4	316.49	316.50	U	N/A	III A 1, II C 2	UPLAND	28		28						0.01			
2	F	4	316.50	316.53	PSS1/EM1B	FLAT - ORGANIC	II C 2, III A 2	WETLAND	191	191							0.04			
2	F	4	316.53	316.56	PSS1/EM1B	FLAT - ORGANIC	II C 2, III A 2	WETLAND	158	158							0.03			
2	F	WB-S	316.56	316.57	PSS1/EM1B	FLAT - ORGANIC	II C 2, III A 2	WETLAND	13	13										0.00
2	F	WB-S	316.57	316.57	PSS1C	RIVERINE	II B 1, II C 1	WETLAND	40	40										0.01
2	F	WB-S	316.57	316.57	PSS1/EM1C	SLOPE	I B 2, III A 2	WETLAND	6	6										0.00
2	F	5A	316.57	316.63	PSS1/EM1C	SLOPE	I B 2, III A 2	WETLAND	304	304								0.06		
2	F	5A	316.63	316.69	U	N/A	III A 1, II C 2	UPLAND	293		293							0.06		
2	F	5A	316.69	316.73	PSS1/EM1B	FLAT - ORGANIC	II C 2, III A 2	WETLAND	233	233								0.04		
2	F	5A	316.73	316.83	U	N/A	III A 1, II C 2	UPLAND	515		515							0.10		
2	F	5A	316.83	316.92	U	N/A	II C 2, III A 1	UPLAND	481		481							0.09		
2	F	5A	316.92	316.96	PSS1B	FLAT - ORGANIC	II C 2	WETLAND	216	216								0.04		
2	F	5A	316.96	316.98	U	N/A	II C 2, III A 1	UPLAND	102		102							0.02		
2	F	5A	316.98	317.41	U	N/A	III A 1, II C 2	UPLAND	2269		2269							0.43		
2	F	5A	317.41	317.42	PSS1C	SLOPE	II C 1, II B 2	WETLAND	51	51								0.01		
2	F	5A	317.42	317.42	PEM1B	SLOPE	III A 2	WETLAND	6	6								0.00		
2	F	WB-S	317.42	317.42	PEM1B	SLOPE	III A 2	WETLAND	13	13										0.00
2	F	WB-S	317.42	317.43	PSS1C	SLOPE	II C 1, II B 2	WETLAND	47	47										0.01
2	F	5A	317.43	317.43	PSS1C	SLOPE	II C 1, II B 2	WETLAND	2	2								0.00		
2	F	5A	317.43	317.50	PSS1B	FLAT - ORGANIC	II D 2, II C 2	WETLAND	333	333								0.06		
2	F	5A	317.50	317.52	PSS1B	SLOPE	II B 2	WETLAND	131	131								0.02		
2	F	5A	317.52	318.06	PSS1B	FLAT - ORGANIC	II D 2, II C 2	WETLAND	2874	2874								0.54		
2	F	5A	318.06	318.12	U	N/A	II D 2, II C 2	UPLAND	312		312							0.06		
2	F	5A	318.12	318.17	PSS1B	FLAT - ORGANIC	II D 2, II C 2	WETLAND	219	219								0.04		
2	F	5A	318.17	318.20	U	N/A	II D 2, II C 2	UPLAND	168		168							0.03		
2	F	5A	318.20	318.24	PSS1B	FLAT - ORGANIC	II D 2, II C 2	WETLAND	203	203								0.04		
2	F	5A	318.24	318.27	U	N/A	II D 2, II C 2	UPLAND	175		175							0.03		
2	F	5A	318.27	318.29	PSS1B	FLAT - ORGANIC	II D 2, II C 2	WETLAND	113	113								0.02		
2	F	4	318.29	318.49	PSS1B	FLAT - ORGANIC	II D 2, II C 2	WETLAND	1039	1039							0.20			
2	F	4	318.49	318.51	PFO4/SS1B	FLAT - ORGANIC	I A 2, II C 2	WETLAND	131	131							0.02			
2	F	5A	318.51	318.56	PFO4/SS1B	FLAT - ORGANIC	I A 2, II C 2	WETLAND	247	247								0.05		
2	F	5A	318.56	318.61	PSS1B	FLAT - ORGANIC	II D 2, II C 2	WETLAND	251	251								0.05		
2	F	5A	318.61	318.61	PFO4/SS1B	FLAT - ORGANIC	I A 2, II C 2	WETLAND	46	46								0.01		
2	F	5A	318.61	318.63	PSS1B	FLAT - ORGANIC	II D 2, II C 2	WETLAND	68	68								0.01		
2	F	5A	318.63	318.67	PFO4/SS1B	FLAT - ORGANIC	I A 2, II C 2	WETLAND	245	245								0.05		
2	F	5A	318.67	318.81	PSS1B	FLAT - ORGANIC	II D 2, II C 2	WETLAND	743	743								0.14		
2	F	5A	318.81	318.91	PFO4/SS1B	FLAT - ORGANIC	I A 2, II C 2	WETLAND	527	527								0.10		
2	F	5A	318.91	318.92	PSS1/EM1E	SLOPE	II C 2, III A 2	WETLAND	27	27								0.01		
2	F	5A	318.92	318.92	PSS1C	SLOPE	II B 1	WETLAND	20	20								0.00		
2	F	5A	318.92	318.94	PSS1/EM1E	SLOPE	II C 2, III A 2	WETLAND	99	99								0.02		
2	F	5A	318.94	318.94	PSS1C	RIVERINE	II B 1	WETLAND	5	5								0.00		
2	F	WB-S	318.94	318.95	PSS1C	RIVERINE	II B 1	WETLAND	21	21										0.00
2	F	WB-S	318.95	318.95	PSS1/EM1C	SLOPE	II C 2, III A 2	WETLAND	37	37										0.01
2	F	WB-S	318.95	318.95	PSS1B	FLAT - ORGANIC	II C 2	WETLAND	2	2										0.00
2	F	5A	318.95	319.06	PSS1B	FLAT - ORGANIC	II C 2	WETLAND	555	555								0.11		
2	F	5A	319.06	319.07	D	N/A	NONE	DISTURBED	45			45						0.01		
2	F	5A	319.07	319.22	PSS1/4B	FLAT - ORGANIC	II C 2, II A 3	WETLAND	791	791								0.15		
2	F	5A	319.22	319.24	PFO4/SS1B	FLAT - ORGANIC	I A 2, II C 2	WETLAND	140	140								0.03		
2	F	WB-S	319.24	319.24	PFO4/SS1B	FLAT - ORGANIC	I A 2, II C 2	WETLAND	1	1										0.00
2	F	WB-S	319.24	319.26	PSS1C	RIVERINE	II B 1	WETLAND	59	59										0.01
2	F	4	319.26	319.27	PSS1C	RIVERINE	II B 1	WETLAND	85	85							0.02			
2	F	4	319.27	319.37	U	N/A	II C 2, II A 3	UPLAND	537		537						0.10			
2	F	4	319.37	319.43	PFO4/SS1B	FLAT - ORGANIC	I A 2, II C 2	WETLAND	318	318							0.06			
2	F	4	319.43	319.46	U	N/A	II C 2, II A 3	UPLAND	150		150						0.03			
2	F	4	319.46	319.53	PFO4/SS1B	FLAT - ORGANIC	I A 2, II C 2	WETLAND	363	363							0.07			
2	F	4	319.53	319.54	PSS1B	FLAT - ORGANIC	II C 2	WETLAND	37	37							0.01			
2	F	4	319.54	319.74	PFO4/SS1B	FLAT - ORGANIC	I A 2, II C 2	WETLAND	1090	1090							0.21			

SPREAD	SECTION	ROW MODE	FROM MP	TO MP	NWI CODE	HGM CLASS	VIERECK	DESCRIPTION	LINEAR FEET	WETLAND FEET	UPLAND FEET	DISTURBED FEET	Comments	Mode 1 - Ice Workpad (miles)	Mode 2 - Frost Pack (miles)	Mode 3 - Timber Mats	Mode 4 - Granular Workpad	Mode 5A - Grade	Mode 5B - Mountain Grade	Stream & Flood Plain Crossings
2	F	WB-S	319.74	319.75	PFO4/SS1B	FLAT - ORGANIC	I A 2, II C 2	WETLAND	24	24										0.00
2	F	WB-S	319.75	319.76	PSS1C	RIVERINE	II B 2, II C 1	WETLAND	41	41										0.01
2	F	WB-S	319.76	319.76	PFO4/SS1B	FLAT - ORGANIC	I A 2	WETLAND	25	25										0.00
2	F	5A	319.76	319.80	PFO4/SS1B	FLAT - ORGANIC	I A 2	WETLAND	220	220								0.04		
2	F	5A	319.80	319.81	PSS1/4B	FLAT - ORGANIC	II A 3, II C 2	WETLAND	58	58								0.01		
2	F	5A	319.81	319.98	U	N/A	II C 2, II A 3	UPLAND	899		899							0.17		
2	F	5A	319.98	320.09	PSS1/4B	FLAT - ORGANIC	II A 3, II C 2	WETLAND	539	539								0.10		
2	F	5A	320.09	320.09	U	N/A	II C 2, II A 3	UPLAND	39		39							0.01		
2	F	5A	320.09	320.11	PSS1/4B	FLAT - ORGANIC	II A 3, II C 2	WETLAND	105	105								0.02		
2	F	4	320.11	320.30	PSS1/4B	FLAT - ORGANIC	II A 3, II C 2	WETLAND	988	988							0.19			
2	F	4	320.30	320.31	PSS1/4C	SLOPE	II B 2, II A 3	WETLAND	45	45							0.01			
2	F	4	320.31	320.43	PSS4/3B	FLAT - ORGANIC	II A 2, II C 2	WETLAND	643	643							0.12			
2	F	4	320.43	320.45	PSS1/4C	SLOPE	II B 2, II A 3	WETLAND	88	88							0.02			
2	F	4	320.45	320.46	PSS1/4B	FLAT - ORGANIC	II C 2, II A 3	WETLAND	51	51							0.01			
2	F	4	320.46	320.48	PSS4/3B	FLAT - ORGANIC	II A 2, II C 2	WETLAND	92	92							0.02			
2	F	4	320.48	320.49	PSS1/4C	SLOPE	II B 2, II A 3	WETLAND	59	59							0.01			
2	F	4	320.49	320.62	PSS4/3B	FLAT - ORGANIC	II A 2, II C 2	WETLAND	726	726							0.14			
2	F	4	320.62	320.64	PSS1/4C	SLOPE	II B 2, II A 3	WETLAND	73	73							0.01			
2	F	4	320.64	320.71	PSS4/3B	FLAT - ORGANIC	II A 2, II C 2	WETLAND	360	360							0.07			
2	F	4	320.71	320.72	PSS1/4C	SLOPE	II B 2, II A 3	WETLAND	75	75							0.01			
2	F	4	320.72	320.73	PSS4/3B	FLAT - ORGANIC	II A 2, II C 2	WETLAND	60	60							0.01			
2	F	4	320.73	320.74	PSS1/4C	SLOPE	II B 2, II A 3	WETLAND	31	31							0.01			
2	F	4	320.74	320.75	PSS4/3B	FLAT - ORGANIC	II A 2, II C 2	WETLAND	68	68							0.01			
2	F	4	320.75	320.75	PSS1/4C	SLOPE	II B 2, II A 3	WETLAND	1	1							0.00			
2	F	5A	320.75	320.76	PSS1/4C	SLOPE	II B 2, II A 3	WETLAND	54	54								0.01		
2	F	5A	320.76	320.82	PSS4/3B	FLAT - ORGANIC	II A 2, II C 2	WETLAND	328	328								0.06		
2	F	5A	320.82	320.84	PSS1/4C	SLOPE	II B 2, II A 3	WETLAND	89	89								0.02		
2	F	5A	320.84	321.32	PSS1/4B	FLAT - ORGANIC	II C 2, II A 2	WETLAND	2520	2520								0.48		
2	F	5A	321.32	321.36	PSS1/EM1B	FLAT - ORGANIC	II C 2, III A 2	WETLAND	225	225								0.04		
2	F	5A	321.36	321.56	PFO4/SS1B	FLAT - ORGANIC	I A 3, II B 2	WETLAND	1043	1043								0.20		
2	F	4	321.56	321.73	PFO4/SS1B	FLAT - ORGANIC	I A 3, II B 2	WETLAND	915	915							0.17			
2	F	4	321.73	321.75	PEM1/SS4B	SLOPE	I A 3, III A 2	WETLAND	97	97							0.02			
2	F	4	321.75	321.77	PFO4/SS1B	SLOPE	I A 2, II C 2	WETLAND	89	89							0.02			
2	F	4	321.77	321.78	PFO4/SS1B	FLAT - ORGANIC	I A 3, II B 2	WETLAND	71	71							0.01			
2	F	4	321.78	321.79	PSS1/4B	SLOPE	I A 3, II C 2	WETLAND	50	50							0.01			
2	F	4	321.79	321.84	PFO4/SS1B	FLAT - ORGANIC	I A 3, II B 2	WETLAND	278	278							0.05			
2	F	4	321.84	321.87	PSS1/EM1C	SLOPE	II C 2, III A 2	WETLAND	158	158							0.03			
2	F	4	321.87	321.87	PSS1/4B	SLOPE	I A 3, II C 2	WETLAND	14	14							0.00			
2	F	4	321.87	321.89	PEM1/SS1C	SLOPE	II A 2, II C 2	WETLAND	65	65							0.01			
2	F	4	321.89	321.96	PFO4/SS1B	FLAT - ORGANIC	I A 3, II B 2	WETLAND	409	409							0.08			
2	F	4	321.96	321.98	PEM1/SS4C	SLOPE	III A 2, II A 3	WETLAND	66	66							0.01			
2	F	4	321.98	322.03	PFO4/SS1B	FLAT - ORGANIC	I A 3, II B 2	WETLAND	268	268							0.05			
2	F	4	322.03	322.04	PEM1/SS4C	SLOPE	III A 2, II A 3	WETLAND	89	89							0.02			
2	F	4	322.04	322.08	PFO4/SS1B	FLAT - ORGANIC	I A 3, II B 2	WETLAND	214	214							0.04			
2	F	4	322.08	322.09	PSS1/EM1C	SLOPE	II C 2, III A 2	WETLAND	56	56							0.01			
2	F	4	322.09	322.10	PEM1/SS1E	RIVERINE	III A 2, II C 2	WETLAND	10	10							0.00			
2	F	WB-S	322.10	322.11	PEM1/SS1E	RIVERINE	III A 2, II C 2	WETLAND	60	60										0.01
2	F	4	322.11	322.11	PEM1/SS1E	RIVERINE	III A 2, II C 2	WETLAND	8	8							0.00			
2	F	4	322.11	322.17	PSS4/1B	FLAT - ORGANIC	II A 1, II C 2	WETLAND	337	337							0.06			
2	F	4	322.17	322.18	PEM1/SS1C	SLOPE	III A 2, II C 2	WETLAND	24	24							0.00			
2	F	4	322.18	322.20	PSS4/1B	FLAT - ORGANIC	II A 1, II C 2	WETLAND	111	111							0.02			
2	F	5A	322.20	322.29	PSS4/1B	FLAT - ORGANIC	II A 1, II C 2	WETLAND	464	464								0.09		
2	F	5A	322.29	322.51	PFO4/SS1B	FLAT - ORGANIC	I A 2, II C 2	WETLAND	1183	1183								0.22		
2	F	5A	322.51	322.63	PSS1B	FLAT - ORGANIC	II C 2	WETLAND	629	629								0.12		
2	F	5A	322.63	323.27	U	N/A	II C 2, III B 1	UPLAND	3364		3364							0.64		
2	F	4	323.27	323.30	U	N/A	II C 2, III B 1	UPLAND	165		165						0.03			
2	F	4	323.30	323.32	PFO4/SS1B	FLAT - ORGANIC	I A 2, II C 2	WETLAND	100	100							0.02			
2	F	4	323.32	323.33	PSS1/4B	SLOPE	II C 2, II A 3	WETLAND	48	48							0.01			
2	F	4	323.33	323.34	PFO4/SS1B	FLAT - ORGANIC	I A 2, II C 2	WETLAND	97	97							0.02			
2	F	4	323.34	323.37	PSS1/4B	SLOPE	II C 2, II A 3	WETLAND	132	132							0.02			
2	F	4	323.37	323.39	PFO4/SS1B	FLAT - ORGANIC	I A 2, II C 2	WETLAND	131	131							0.02			
2	F	4	323.39	323.40	PSS1/4B	SLOPE	II C 2, II A 3	WETLAND	30	30							0.01			
2	F	4	323.40	323.45	PFO4/SS1B	FLAT - ORGANIC	I A 2, II C 2	WETLAND	287	287							0.05			
2	F	WB-S	323.45	323.46	PFO4/SS1B	FLAT - ORGANIC	I A 2, II C 2	WETLAND	4	4										0.00
2	F	WB-S	323.46	323.47	PEM1/SS1C	RIVERINE	III A 2, II C 2	WETLAND	56	56										0.01
2	F	4	323.47	323.47	PEM1/SS1C	RIVERINE	III A 2, II C 2	WETLAND	16	16							0.00			
2	F	4	323.47	323.48	PFO4/SS1B	FLAT - ORGANIC	I A 2, II C 2	WETLAND	39	39							0.01			
2	F	4	323.48	323.48	PSS1/4B	SLOPE	II C 2, II A 3	WETLAND	37	37							0.01			
2	F	4	323.48	323.51	PFO4/SS1B	FLAT - ORGANIC	I A 2, II C 2	WETLAND	153	153							0.03			
2	F	4	323.51	323.53	PSS1/4B	SLOPE	II C 2, II A 3	WETLAND	65	65							0.01			
2	F	4	323.53	323.59	PFO4/SS1B	FLAT - ORGANIC	I A 2, II C 2	WETLAND	349	349							0.07			
2	F	4	323.59	323.60	PSS1/4B	SLOPE	II C 2, II A 3	WETLAND	40	40							0.01			

SPREAD	SECTION	ROW MODE	FROM MP	TO MP	NWI CODE	HGM CLASS	VIERECK	DESCRIPTION	LINEAR FEET	WETLAND FEET	UPLAND FEET	DISTURBED FEET	Comments	Mode 1 - Ice Workpad (miles)	Mode 2 - Frost Pack (miles)	Mode 3 - Timber Mats	Mode 4 - Granular Workpad	Mode 5A - Grade	Mode 5B - Mountain Grade	Stream & Flood Plain Crossings
2	F	4	323.60	323.82	PFO4/SS1B	FLAT - ORGANIC	I A 2, II C 2	WETLAND	1189	1189							0.23			
2	F	4	323.82	323.83	PSS1/4B	SLOPE	II C 2, II A 3	WETLAND	34	34							0.01			
2	F	4	323.83	323.85	PFO4/SS1B	FLAT - ORGANIC	I A 2, II C 2	WETLAND	81	81							0.02			
2	F	4	323.85	323.85	PSS1/4B	SLOPE	II C 2, II A 3	WETLAND	40	40							0.01			
2	F	4	323.85	323.90	PFO4/SS1B	FLAT - ORGANIC	I A 2, II C 2	WETLAND	230	230							0.04			
2	F	4	323.90	323.92	PFO4B	FLAT - ORGANIC	I C 1	WETLAND	99	99							0.02			
2	F	4	323.92	323.93	PSS1E	RIVERINE	II C 1	WETLAND	56	56							0.01			
2	F	WB-S	323.93	323.94	PSS1E	RIVERINE	II C 1	WETLAND	60	60										0.01
2	F	4	323.94	323.94	PSS1E	RIVERINE	II C 1	WETLAND	12	12							0.00			
2	F	4	323.94	324.06	PFO4/SS1B	FLAT - ORGANIC	I A 2, II C 2	WETLAND	657	657							0.12			
2	F	4	324.06	324.07	PSS1E	RIVERINE	II C 1	WETLAND	50	50							0.01			
2	F	WB-S	324.07	324.09	PSS1E	RIVERINE	II C 1	WETLAND	60	60										0.01
2	F	4	324.09	324.09	PSS1E	RIVERINE	II C 1	WETLAND	2	2							0.00			
2	F	4	324.09	324.36	PFO4/SS1B	FLAT - ORGANIC	I A 2, II C 2	WETLAND	1429	1429							0.27			
2	F	4	324.36	324.43	U	N/A	I A 3, II C 2	UPLAND	405		405						0.08			
2	F	4	324.43	324.44	PFO4/SS1B	FLAT - ORGANIC	I A 2, II C 2	WETLAND	23	23							0.00			
2	F	4	324.44	324.68	U	N/A	I A 3, II C 2	UPLAND	1274		1274						0.24			
2	F	4	324.68	324.73	U	N/A	III B 1, III A 1	UPLAND	270		270						0.05			
2	F	4	324.73	325.27	U	N/A	III B 1, III A 1	UPLAND	2873		2873						0.54			
2	F	4	325.27	325.79	U	N/A	I A 2, II C 2	UPLAND	2719		2719						0.51			
2	F	4	325.79	325.81	PSS4/1B	FLAT - ORGANIC	I A 2, II C 2	WETLAND	102	102							0.02			
2	F	4	325.81	325.84	PSS1C	RIVERINE	II B 2	WETLAND	180	180							0.03			
2	F	4	325.84	325.84	U	N/A	I C 2, II C 2	UPLAND	10		10						0.00			
2	F	4	325.84	325.86	PSS1C	RIVERINE	II B 2	WETLAND	59	59							0.01			
2	F	4	325.86	325.86	U	N/A	I C 2, II C 2	UPLAND	22		22						0.00			
2	F	4	325.86	325.87	PSS1C	RIVERINE	II B 2	WETLAND	36	36							0.01			
2	F	4	325.87	325.87	PSS4/1B	FLAT - ORGANIC	II A 2, II C 2	WETLAND	16	16							0.00			
2	F	WB-S	325.87	325.88	PSS4/1B	FLAT - ORGANIC	II A 2, II C 2	WETLAND	60	60										0.01
2	F	4	325.88	325.91	PSS4/1B	FLAT - ORGANIC	II A 2, II C 2	WETLAND	156	156							0.03			
2	F	4	325.91	325.92	PSS1/4B	FLAT - ORGANIC	II C 2, II A 2	WETLAND	57	57							0.01			
2	F	4	325.92	325.94	PSS4/1B	FLAT - ORGANIC	II A 2, II C 2	WETLAND	118	118							0.02			
2	F	4	325.94	325.96	PSS1/4B	FLAT - ORGANIC	II C 2, II A 2	WETLAND	81	81							0.02			
2	F	4	325.96	326.00	PSS4/1B	FLAT - ORGANIC	II A 2, II C 2	WETLAND	241	241							0.05			
2	F	4	326.00	326.04	PFO4B	FLAT - ORGANIC	I A 2, II C 2	WETLAND	166	166							0.03			
2	F	4	326.04	326.11	PSS4/1B	FLAT - ORGANIC	II A 2, II C 2	WETLAND	417	417							0.08			
2	F	4	326.11	326.12	PSS1/4B	FLAT - ORGANIC	II C 2, II A 2	WETLAND	35	35							0.01			
2	F	4	326.12	326.17	PSS4/1B	FLAT - ORGANIC	II A 2, II C 2	WETLAND	268	268							0.05			
2	F	4	326.17	326.19	PFO4B	FLAT - ORGANIC	I A 2, II C 2	WETLAND	105	105							0.02			
2	F	4	326.19	326.24	PSS4/1B	FLAT - ORGANIC	II A 2, II C 2	WETLAND	239	239							0.05			
2	F	4	326.24	326.25	PFO4B	FLAT - ORGANIC	I A 2, II C 2	WETLAND	49	49							0.01			
2	F	4	326.25	326.27	PSS4/1B	FLAT - ORGANIC	II A 2, II C 2	WETLAND	100	100							0.02			
2	F	4	326.27	326.30	PSS1/4B	FLAT - ORGANIC	II C 2, II A 2	WETLAND	162	162							0.03			
2	F	4	326.30	326.37	PSS4/1B	FLAT - ORGANIC	II A 2, II C 2	WETLAND	407	407							0.08			
2	F	4	326.37	326.38	PSS1/4B	FLAT - ORGANIC	II C 2, II A 2	WETLAND	46	46							0.01			
2	F	4	326.38	326.40	PSS4/1B	FLAT - ORGANIC	II A 2, II C 2	WETLAND	81	81							0.02			
2	F	4	326.40	326.40	PSS1/4B	FLAT - ORGANIC	II C 2, II A 2	WETLAND	27	27							0.01			
2	F	4	326.40	326.41	PSS4/1B	FLAT - ORGANIC	II A 2, II C 2	WETLAND	46	46							0.01			
2	F	4	326.41	326.43	PSS1/4B	FLAT - ORGANIC	II C 2, II A 2	WETLAND	75	75							0.01			
2	F	4	326.43	326.43	PSS4/1B	FLAT - ORGANIC	II A 2, II C 2	WETLAND	40	40							0.01			
2	F	4	326.43	326.44	PSS1/4B	FLAT - ORGANIC	II C 2, II A 2	WETLAND	45	45							0.01			
2	F	4	326.44	326.45	PSS4/1B	FLAT - ORGANIC	II A 2, II C 2	WETLAND	63	63							0.01			
2	F	4	326.45	326.46	PSS1/4B	FLAT - ORGANIC	II C 2, II A 2	WETLAND	32	32							0.01			
2	F	4	326.46	326.50	PSS4/1B	FLAT - ORGANIC	II A 2, II C 2	WETLAND	215	215							0.04			
2	F	4	326.50	326.51	PSS1/4B	FLAT - ORGANIC	II C 2, II A 2	WETLAND	66	66							0.01			
2	F	4	326.51	326.53	PSS4/1B	FLAT - ORGANIC	II A 2, II C 2	WETLAND	103	103							0.02			
2	F	4	326.53	326.54	PSS1/4B	FLAT - ORGANIC	II C 2, II A 2	WETLAND	28	28							0.01			
2	F	4	326.54	326.56	PSS4/1B	FLAT - ORGANIC	II A 2, II C 2	WETLAND	126	126							0.02			
2	F	4	326.56	326.58	U	N/A	I A 3	UPLAND	79		79						0.01			
2	F	4	326.58	326.60	PSS1B	FLAT - ORGANIC	II B 2, II C 2	WETLAND	110	110							0.02			
2	F	4	326.60	326.60	PSS4/1B	FLAT - ORGANIC	II A 2, II C 2	WETLAND	30	30							0.01			
2	F	4	326.60	326.66	PSS1B	FLAT - ORGANIC	II B 2, II C 2	WETLAND	287	287							0.05			
2	F	4	326.66	326.67	D	N/A	NONE	DISTURBED	50			50					0.01			
2	F	4	326.67	326.69	U	N/A	I A 3	UPLAND	116		116						0.02			
2	F	4	326.69	326.77	PSS1B	FLAT - ORGANIC	II B 2, II C 2	WETLAND	420	420							0.08			
2	G	4	326.77	326.78	PSS1B	SLOPE	II B 2, II C 2	WETLAND	41	41							0.01			
2	G	4	326.78	326.79	U	N/A	I A 3	UPLAND	63		63						0.01			
2	G	4	326.79	326.81	PSS1/4B	SLOPE	II C 2, II A 2	WETLAND	115	115							0.02			
2	G	4	326.81	326.83	PSS1/4B	FLAT - ORGANIC	II C 2, II A 2	WETLAND	86	86							0.02			
2	G	4	326.83	326.87	PSS1/EM1C	SLOPE	II C 2, III A 2	WETLAND	235	235							0.04			
2	G	4	326.87	326.89	PSS1B	SLOPE	II B 2, II C 2	WETLAND	87	87							0.02			
2	G	4	326.89	326.90	PSS1/EM1B	FLAT - ORGANIC	II C 2, III A 2	WETLAND	67	67							0.01			
2	G	4	326.90	326.91	PSS1/EM1B	FLAT - ORGANIC	II C 2, III A 2	WETLAND	71	71							0.01			

SPREAD	SECTION	ROW MODE	FROM MP	TO MP	NWI CODE	HGM CLASS	VIERECK	DESCRIPTION	LINEAR FEET	WETLAND FEET	UPLAND FEET	DISTURBED FEET	Comments	Mode 1 - Ice Workpad (miles)	Mode 2 - Frost Pack (miles)	Mode 3 - Timber Mats	Mode 4 - Granular Workpad	Mode 5A - Grade	Mode 5B - Mountain Grade	Stream & Flood Plain Crossings
2	G	4	326.91	326.93	PSS1/EM1B	FLAT - ORGANIC	II C 2, III A 2	WETLAND	105	105							0.02			
2	G	4	326.93	327.10	PSS1/EM1B	FLAT - ORGANIC	II C 2, III A 2	WETLAND	888	888							0.17			
2	G	4	327.10	327.12	PSS1/4B	FLAT - ORGANIC	II C 2, II A 2	WETLAND	97	97							0.02			
2	G	4	327.12	327.14	PSS4B	FLAT - ORGANIC	II A 2	WETLAND	125	125							0.02			
2	G	4	327.14	327.18	U	N/A	I C 2	UPLAND	189		189						0.04			
2	G	4	327.18	327.21	PSS1B	FLAT - ORGANIC	II C 2, II B 2	WETLAND	177	177							0.03			
2	G	4	327.21	327.26	PSS1/EM1B	FLAT - ORGANIC	II C 2, III A 2	WETLAND	265	265							0.05			
2	G	4	327.26	327.28	U	N/A	I C 2	UPLAND	83		83						0.02			
2	G	WB-W	327.28	327.29	U	N/A	I C 2	UPLAND	60		60									0.01
2	G	4	327.29	327.30	U	N/A	I C 2	UPLAND	38		38						0.01			
2	G	4	327.30	327.38	PSS1B	SLOPE	II C 2, II B 2	WETLAND	452	452							0.09			
2	G	4	327.38	327.42	U	N/A	II C 2, II B 2	UPLAND	192		192						0.04			
2	G	4	327.42	327.44	PSS1B	SLOPE	II C 2, II B 2	WETLAND	116	116							0.02			
2	G	4	327.44	327.49	U	N/A	II C 2, II B 1	UPLAND	286		286						0.05			
2	G	4	327.49	327.53	PSS1B	SLOPE	II C 2, II B 2	WETLAND	179	179							0.03			
2	G	4	327.53	327.56	U	N/A	II B 2, II C 2	UPLAND	144		144						0.03			
2	G	4	327.56	327.62	PSS1B	SLOPE	II C 2, II B 2	WETLAND	320	320							0.06			
2	G	4	327.62	327.65	U	N/A	II C 2, II B 2	UPLAND	175		175						0.03			
2	G	4	327.65	327.72	PSS1B	SLOPE	II C 2, II B 2	WETLAND	386	386							0.07			
2	G	4	327.72	327.77	PSS1B	SLOPE	II B 1	WETLAND	243	243							0.05			
2	G	4	327.77	327.78	U	N/A	II C 2, III B 1	UPLAND	34		34						0.01			
2	G	4	327.78	327.82	PSS1B	SLOPE	II C 2, II B 2	WETLAND	230	230							0.04			
2	G	4	327.82	327.83	U	N/A	II C 2, II B 2	UPLAND	38		38						0.01			
2	G	4	327.83	327.87	PSS1B	SLOPE	II C 2, II B 2	WETLAND	223	223							0.04			
2	G	4	327.87	327.96	U	N/A	II C 2, III B 1	UPLAND	464		464						0.09			
2	G	4	327.96	327.97	PSS1B	SLOPE	II C 2, II B 2	WETLAND	95	95							0.02			
2	G	4	327.97	328.03	U	N/A	II C 2, III B 1	UPLAND	301		301						0.06			
2	G	4	328.03	328.06	PSS1B	SLOPE	II C 2, II B 2	WETLAND	142	142							0.03			
2	G	4	328.06	328.09	U	N/A	II B 2, III B 1	UPLAND	153		153						0.03			
2	G	4	328.09	328.18	U	N/A	III B 1, II A 3	UPLAND	489		489						0.09			
2	G	4	328.18	328.19	U	N/A	II B 2, III B 1	UPLAND	30		30						0.01			
2	G	4	328.19	328.19	PSS1/EM1B	SLOPE	II C 2, III A 2	WETLAND	45	45							0.01			
2	G	4	328.19	328.24	U	N/A	II B 2, III B 1	UPLAND	220		220						0.04			
2	G	4	328.24	328.25	PSS1/EM1B	SLOPE	II C 2, III A 2	WETLAND	58	58							0.01			
2	G	4	328.25	328.26	U	N/A	II B 2, III B 1	UPLAND	67		67						0.01			
2	G	4	328.26	328.26	PSS1/EM1B	SLOPE	II C 2, III A 2	WETLAND	16	16							0.00			
2	G	4	328.26	328.34	U	N/A	II C 2, III B 1	UPLAND	420		420						0.08			
2	G	4	328.34	328.36	PSS1/EM1C	SLOPE	II B 2, III A 2	WETLAND	82	82							0.02			
2	G	4	328.36	328.38	U	N/A	II C 2, III B 1	UPLAND	104		104						0.02			
2	G	4	328.38	328.38	PSS1/EM1C	SLOPE	II B 2, III A 2	WETLAND	38	38							0.01			
2	G	4	328.38	328.44	U	N/A	II C 2, III B 1	UPLAND	285		285						0.05			
2	G	4	328.44	328.46	U	N/A	II B 2, III B 1	UPLAND	100		100						0.02			
2	G	4	328.46	328.46	PSS4/3B	FLAT - ORGANIC	II A 2, II C 2	WETLAND	8	8							0.00			
2	G	4	328.46	328.53	U	N/A	II B 2, III B 1	UPLAND	369		369						0.07			
2	G	4	328.53	328.58	U	N/A	II C 2, III B 1	UPLAND	296		296						0.06			
2	G	4	328.58	328.63	PSS4/3B	FLAT - ORGANIC	II A 2, II C 2	WETLAND	231	231							0.04			
2	G	4	328.63	328.64	PSS1/EM1C	SLOPE	II C 2, III A 2	WETLAND	71	71							0.01			
2	G	4	328.64	328.66	U	N/A	III B 1, II A 3	UPLAND	85		85						0.02			
2	G	4	328.66	328.67	PSS1/4B	SLOPE	II A 3, II C 2	WETLAND	62	62							0.01			
2	G	4	328.67	328.68	U	N/A	II A 2	UPLAND	49		49						0.01			
2	G	4	328.68	328.69	PSS1/FO4B	SLOPE	I A 3, II B 2	WETLAND	43	43							0.01			
2	G	4	328.69	328.70	U	N/A	I A 3, II C 2	UPLAND	94		94						0.02			
2	G	WB-W	328.70	328.72	U	N/A	I A 3, II C 2	UPLAND	60		60									0.01
2	G	4	328.72	328.72	U	N/A	I A 3, II C 2	UPLAND	2		2						0.00			
2	G	4	328.72	328.73	PSS1C	SLOPE	II B 1	WETLAND	54	54							0.01			
2	G	4	328.73	328.75	U	N/A	II B 2	UPLAND	125		125						0.02			
2	G	4	328.75	328.77	U	N/A	II A 2	UPLAND	84		84						0.02			
2	G	4	328.77	328.79	U	N/A	II C 2	UPLAND	126		126						0.02			
2	G	4	328.79	328.79	PSS1B	SLOPE	II B 2	WETLAND	19	19							0.00			
2	G	4	328.79	328.83	PSS1/FO4B	SLOPE	I A 3, II B 2	WETLAND	190	190							0.04			
2	G	4	328.83	328.83	U	N/A	III B 1, II A 3	UPLAND	8		8						0.00			
2	G	4	328.83	328.87	PSS1/FO4B	SLOPE	I A 3, II B 2	WETLAND	229	229							0.04			
2	G	4	328.87	328.91	PSS1/EM1C	SLOPE	II C 2, III A 2	WETLAND	209	209							0.04			
2	G	4	328.91	328.94	U	N/A	III B 1, II A 3	UPLAND	151		151						0.03			
2	G	4	328.94	329.02	PSS1/EM1C	SLOPE	II C 2, III A 2	WETLAND	431	431							0.08			
2	G	4	329.02	329.07	PSS1/EM1C	SLOPE	II C 2, III A 2	WETLAND	234	234							0.04			
2	G	4	329.07	329.08	U	N/A	III B 1, II A 3	UPLAND	37		37						0.01			
2	G	4	329.08	329.14	PSS1/EM1C	SLOPE	II C 2, III A 2	WETLAND	364	364							0.07			
2	G	4	329.14	329.19	PSS3/4B	SLOPE	II C 2, II A 2	WETLAND	231	231							0.04			
2	G	4	329.19	329.20	PSS3/4B	FLAT - ORGANIC	II C 2, II A 2	WETLAND	67	67							0.01			
2	G	4	329.20	329.26	U	N/A	II C 2, III B 1	UPLAND	298		298						0.06			
2	G	4	329.26	329.28	U	N/A	I A 2	UPLAND	112		112						0.02			

SPREAD	SECTION	ROW MODE	FROM MP	TO MP	NWI CODE	HGM CLASS	VIERECK	DESCRIPTION	LINEAR FEET	WETLAND FEET	UPLAND FEET	DISTURBED FEET	Comments	Mode 1 - Ice Workpad (miles)	Mode 2 - Frost Pack (miles)	Mode 3 - Timber Mats	Mode 4 - Granular Workpad	Mode 5A - Grade	Mode 5B - Mountain Grade	Stream & Flood Plain Crossings
2	G	4	329.28	329.29	PSS3/4B	FLAT - ORGANIC	II C 2, II A 2	WETLAND	73	73							0.01			
2	G	4	329.29	329.35	U	N/A	I A 2	UPLAND	281		281						0.05			
2	G	4	329.35	329.36	PSS3/4B	FLAT - ORGANIC	II C 2, II A 2	WETLAND	59	59							0.01			
2	G	4	329.36	329.39	U	N/A	I A 2	UPLAND	190		190						0.04			
2	G	4	329.39	329.41	PSS3/4B	SLOPE	II C 2, II A 2	WETLAND	107	107							0.02			
2	G	4	329.41	329.42	PSS1C	RIVERINE	II B 2, II C 2	WETLAND	41	41							0.01			
2	G	WB-W	329.42	329.43	PSS1C	RIVERINE	II B 2, II C 2	WETLAND	42	42										0.01
2	G	WB-W	329.43	329.44	U	N/A	I A 2	UPLAND	48		48									0.01
2	G	4	329.44	329.52	U	N/A	I A 2	UPLAND	446		446						0.08			
2	G	4	329.52	329.53	PFO4/SS1B	SLOPE	I A 2, II C 2	WETLAND	23	23							0.00			
2	G	4	329.53	329.58	U	N/A	I A 2	UPLAND	261		261						0.05			
2	G	4	329.58	329.59	PSS4/3B	FLAT - ORGANIC	II A 2, II C 2	WETLAND	72	72							0.01			
2	G	4	329.59	329.60	PSS1B	SLOPE	II C 2, III A 2	WETLAND	53	53							0.01			
2	G	4	329.60	329.71	U	N/A	II C 2, III B 1	UPLAND	596		596						0.11			
2	G	4	329.71	329.72	PSS1/EM1B	FLAT - ORGANIC	II C 2, III A 2	WETLAND	33	33							0.01			
2	G	4	329.72	329.81	U	N/A	II C 2, III B 1	UPLAND	476		476						0.09			
2	G	4	329.81	329.82	PSS1/EM1B	FLAT - ORGANIC	II C 2, III A 2	WETLAND	61	61							0.01			
2	G	4	329.82	329.83	U	N/A	II C 2, III B 1	UPLAND	72		72						0.01			
2	G	4	329.83	329.95	PSS4/3B	FLAT - ORGANIC	II A 2, II C 2	WETLAND	620	620							0.12			
2	G	4	329.95	330.18	U	N/A	I A 2	UPLAND	1211		1211						0.23			
2	G	4	330.18	330.97	U	N/A	II C 2, III B 1	UPLAND	4186		4186						0.79			
2	G	4	330.97	330.98	D	N/A	II B 2	DISTURBED	60			60					0.01			
2	G	4	330.98	331.16	U	N/A	II C 2, III B 1	UPLAND	949		949						0.18			
2	G	4	331.16	331.18	PSS1/EM1B	FLAT - ORGANIC	II C 2, III A 2	WETLAND	76	76							0.01			
2	G	4	331.18	331.89	U	N/A	II C 2, III B 1	UPLAND	3770		3770						0.71			
2	G	4	331.89	331.90	PSS1B	FLAT - ORGANIC	II C 2	WETLAND	50	50							0.01			
2	G	4	331.90	331.96	PSS4/1B	FLAT - ORGANIC	II A 2, II C 2	WETLAND	298	298							0.06			
2	G	4	331.96	332.01	U	N/A	II C 2, III B 1	UPLAND	284		284						0.05			
2	G	4	332.01	332.07	PSS4/1B	FLAT - ORGANIC	II A 2, II C 2	WETLAND	301	301							0.06			
2	G	4	332.07	332.08	PSS1B	SLOPE	II B 2, II C 2	WETLAND	43	43							0.01			
2	G	4	332.08	332.12	PSS1/4B	FLAT - ORGANIC	II C 2, II A 3	WETLAND	237	237							0.04			
2	G	4	332.12	332.19	PSS1/4B	FLAT - ORGANIC	II C 2, II A 3	WETLAND	345	345							0.07			
2	G	4	332.19	332.28	U	N/A	II C 2	UPLAND	510		510						0.10			
2	G	4	332.28	332.40	U	N/A	II A 2, II C 2	UPLAND	599		599						0.11			
2	G	4	332.40	332.40	U	N/A	II C 2	UPLAND	33		33						0.01			
2	G	4	332.40	332.53	U	N/A	II A 2, II C 2	UPLAND	649		649						0.12			
2	G	4	332.53	332.54	U	N/A	II C 2	UPLAND	71		71						0.01			
2	G	4	332.54	332.62	U	N/A	II A 2, II C 2	UPLAND	413		413						0.08			
2	G	4	332.62	332.76	U	N/A	II C 2	UPLAND	729		729						0.14			
2	G	4	332.76	332.82	U	N/A	II C 2, III B 1	UPLAND	332		332						0.06			
2	G	4	332.82	332.88	U	N/A	I A 2	UPLAND	296		296						0.06			
2	G	4	332.88	332.96	U	N/A	II C 2, III B 1	UPLAND	442		442						0.08			
2	G	4	332.96	332.96	PSS1/EM1B	FLAT - ORGANIC	II C 2, III A 2	WETLAND	18	18							0.00			
2	G	4	332.96	332.97	U	N/A	II C 2, III B 1	UPLAND	63		63						0.01			
2	G	4	332.97	333.03	PSS1/EM1B	FLAT - ORGANIC	II C 2, III A 2	WETLAND	299	299							0.06			
2	G	4	333.03	333.09	U	N/A	II C 2, III B 1	UPLAND	301		301						0.06			
2	G	4	333.09	333.42	PSS1/EM1B	FLAT - ORGANIC	II C 2, III A 2	WETLAND	1751	1751							0.33			
2	G	4	333.42	333.62	U	N/A	III B 1, III A 1	UPLAND	1083		1083						0.21			
2	G	4	333.62	333.68	PSS1/EM1B	FLAT - ORGANIC	II C 2, III A 2	WETLAND	293	293							0.06			
2	G	4	333.68	333.69	PSS4B	SLOPE	II A 2	WETLAND	55	55							0.01			
2	G	4	333.69	333.77	PSS1/EM1B	FLAT - ORGANIC	II C 2, III A 2	WETLAND	427	427							0.08			
2	G	4	333.77	333.86	PSS1/EM1B	SLOPE	II C 2, III A 2	WETLAND	453	453							0.09			
2	G	4	333.86	333.95	PEM1/SS1B	SLOPE	III A 2, II C 2	WETLAND	468	468							0.09			
2	G	4	333.95	334.00	PEM1/SS1B	FLAT - ORGANIC	III A 2, II C 2	WETLAND	286	286							0.05			
2	G	4	334.00	334.04	PSS4/1B	FLAT - ORGANIC	II A 2, II C 2	WETLAND	223	223							0.04			
2	G	4	334.04	334.11	PEM1/SS1B	FLAT - ORGANIC	III A 2, II C 2	WETLAND	355	355							0.07			
2	G	4	334.11	334.11	PSS1/EM1B	FLAT - ORGANIC	II C 2, III A 2	WETLAND	24	24							0.00			
2	G	4	334.11	334.13	PEM1/SS1B	FLAT - ORGANIC	III A 2, II C 2	WETLAND	65	65							0.01			
2	G	4	334.13	334.13	U	N/A	II B 2	UPLAND	22		22						0.00			
2	G	WB-W	334.13	334.13	U	N/A	II B 2	UPLAND	2		2									0.00
2	G	WB-W	334.13	334.14	R3UBH	RIVERINE	NONE	WETLAND	24	24										0.00
2	G	WB-W	334.14	334.14	U	N/A	II B 2	UPLAND	22		22									0.00
2	G	WB-W	334.14	334.14	PSS1/EM1B	FLAT - ORGANIC	II C 2, III A 2	WETLAND	11	11										0.00
2	G	4	334.14	334.18	PSS1/EM1B	FLAT - ORGANIC	II C 2, III A 2	WETLAND	184	184							0.03			
2	G	4	334.18	334.24	PEM1/SS1B	SLOPE	III A 2, II C 2	WETLAND	318	318							0.06			
2	G	4	334.24	334.25	PSS4/3B	SLOPE	II A 2, II C 2	WETLAND	85	85							0.02			
2	G	4	334.25	334.27	PEM1/SS1B	SLOPE	III A 2, II C 2	WETLAND	69	69							0.01			
2	G	4	334.27	334.29	PSS1/EM1B	FLAT - ORGANIC	II C 2, III A 2	WETLAND	123	123							0.02			
2	G	4	334.29	334.34	U	N/A	III B 1, III A 1	UPLAND	241		241						0.05			
2	G	5A	334.34	334.36	U	N/A	III B 1, III A 1	UPLAND	153		153							0.03		
2	G	5A	334.36	334.41	U	N/A	I A 3, II C 2	UPLAND	236		236							0.04		
2	G	5A	334.41	334.55	U	N/A	III B 1, III A 1	UPLAND	724		724							0.14		

SPREAD	SECTION	ROW MODE	FROM MP	TO MP	NWI CODE	HGM CLASS	VIERECK	DESCRIPTION	LINEAR FEET	WETLAND FEET	UPLAND FEET	DISTURBED FEET	Comments	Mode 1 - Ice Workpad (miles)	Mode 2 - Frost Pack (miles)	Mode 3 - Timber Mats	Mode 4 - Granular Workpad	Mode 5A - Grade	Mode 5B - Mountain Grade	Stream & Flood Plain Crossings
2	G	5A	334.55	334.85	U	N/A	III B 1, III A 1	UPLAND	1587		1587							0.30		
2	G	4	334.85	334.88	U	N/A	III B 1, III A 1	UPLAND	194		194						0.04			
2	G	4	334.88	334.93	U	N/A	I A 2, II C 2	UPLAND	266		266						0.05			
2	G	4	334.93	334.95	PEM1/SS1B	FLAT - ORGANIC	III A 2, II C 2	WETLAND	103	103							0.02			
2	G	4	334.95	334.97	PSS1/EM1E	SLOPE	II C 2, III A 2	WETLAND	114	114							0.02			
2	G	4	334.97	335.05	PSS1/EM1C	SLOPE	II C 2, III A 2	WETLAND	422	422							0.08			
2	G	4	335.05	335.11	U	N/A	II C 2, III A 2	UPLAND	298		298						0.06			
2	G	4	335.11	335.12	PSS1/EM1C	SLOPE	II C 2, III A 2	WETLAND	61	61							0.01			
2	G	4	335.12	335.13	U	N/A	I A 2, II C 2	UPLAND	50		50						0.01			
2	G	4	335.13	335.14	U	N/A	III B 1, III A 1	UPLAND	57		57						0.01			
2	G	4	335.14	335.16	U	N/A	I A 2, II C 2	UPLAND	68		68						0.01			
2	G	4	335.16	335.21	U	N/A	III B 1, III A 1	UPLAND	275		275						0.05			
2	G	4	335.21	335.22	PSS1/EM1C	SLOPE	II C 2, III A 2	WETLAND	64	64							0.01			
2	G	4	335.22	335.47	U	N/A	II C 2, III A 2	UPLAND	1297		1297						0.25			
2	G	4	335.47	335.51	PSS1/EM1C	SLOPE	II C 2, III A 2	WETLAND	214	214							0.04			
2	G	4	335.51	335.62	PSS1/EM1B	FLAT - ORGANIC	II C 2, III A 2	WETLAND	577	577							0.11			
2	G	4	335.62	335.65	PSS1/EM1C	SLOPE	II C 2, III A 2	WETLAND	161	161							0.03			
2	G	4	335.65	335.67	PSS1/EM1B	FLAT - ORGANIC	II C 2, III A 2	WETLAND	125	125							0.02			
2	G	4	335.67	335.80	U	N/A	II C 2	UPLAND	693		693						0.13			
2	G	4	335.80	335.86	PSS1/EM1B	FLAT - ORGANIC	II C 2, III A 2	WETLAND	315	315							0.06			
2	G	4	335.86	336.00	U	N/A	II C 2	UPLAND	746		746						0.14			
2	G	4	336.00	336.02	U	N/A	II C 2, III B 1	UPLAND	104		104						0.02			
2	G	4	336.02	336.08	U	N/A	I A 2	UPLAND	317		317						0.06			
2	G	4	336.08	336.09	U	N/A	II C 2, III B 1	UPLAND	20		20						0.00			
2	G	4	336.09	336.12	U	N/A	I A 2	UPLAND	185		185						0.04			
2	G	4	336.12	336.16	PEM1/SS1B	SLOPE	III A 2, II D 2	WETLAND	227	227							0.04			
2	G	4	336.16	336.18	U	N/A	II A 2	UPLAND	65		65						0.01			
2	G	4	336.18	336.27	U	N/A	II C 2, III B 1	UPLAND	519		519						0.10			
2	G	4	336.27	336.38	U	N/A	II A 2	UPLAND	570		570						0.11			
2	G	4	336.38	336.40	PSS1/EM1B	FLAT - ORGANIC	II D 2, II A 2	WETLAND	84	84							0.02			
2	G	4	336.40	336.49	PEM1/SS1B	SLOPE	III A 2, II D 2	WETLAND	508	508							0.10			
2	G	4	336.49	336.57	PEM1/SS1B	FLAT - ORGANIC	III A 2, II D 2	WETLAND	422	422							0.08			
2	G	4	336.57	336.75	U	N/A	II C 2, III B 1	UPLAND	916		916						0.17			
2	G	4	336.75	336.77	PEM1/SS1B	FLAT - ORGANIC	III A 2, II D 2	WETLAND	146	146							0.03			
2	G	4	336.77	336.78	PEM1/SS1B	SLOPE	III A 2, II D 2	WETLAND	39	39							0.01			
2	G	4	336.78	336.80	PEM1/SS1B	FLAT - ORGANIC	III A 2, II D 2	WETLAND	69	69							0.01			
2	G	4	336.80	336.88	U	N/A	II C 2, II A 1	UPLAND	438		438						0.08			
2	G	4	336.88	336.90	PEM1/SS1B	FLAT - ORGANIC	III A 2, II D 2	WETLAND	107	107							0.02			
2	G	4	336.90	337.05	U	N/A	II C 2, II A 1	UPLAND	776		776						0.15			
2	G	4	337.05	337.09	PSS1/EM1B	FLAT - ORGANIC	II C 2, III A 2	WETLAND	253	253							0.05			
2	G	4	337.09	337.19	U	N/A	II C 2	UPLAND	497		497						0.09			
2	G	4	337.19	337.21	PSS1B	FLAT - ORGANIC	II C 2	WETLAND	122	122							0.02			
2	G	4	337.21	337.49	U	N/A	II C 2	UPLAND	1483		1483						0.28			
2	G	4	337.49	337.57	U	N/A	I A 2	UPLAND	424		424						0.08			
2	G	4	337.57	337.59	PSS1/4B	FLAT - ORGANIC	II C 2, II A 3	WETLAND	90	90							0.02			
2	G	4	337.59	337.59	PSS1C	RIVERINE	II B 1	WETLAND	9	9							0.00			
2	G	WB-W	337.59	337.60	PSS1C	RIVERINE	II B 1	WETLAND	48	48										0.01
2	G	WB-W	337.60	337.60	PSS4/1B	SLOPE	II A 2, II C 2	WETLAND	11	11										0.00
2	G	WB-W	337.60	337.60	PSS1/4B	FLAT - ORGANIC	II C 2, II A 3	WETLAND	0	0										0.00
2	G	4	337.60	337.63	PSS1/4B	FLAT - ORGANIC	II C 2, II A 3	WETLAND	170	170							0.03			
2	G	4	337.63	337.71	U	N/A	I A 2	UPLAND	389		389						0.07			
2	G	4	337.71	337.71	PSS4/1B	SLOPE	II A 2, II C 2	WETLAND	26	26							0.00			
2	G	4	337.71	337.79	U	N/A	I A 2	UPLAND	387		387						0.07			
2	G	4	337.79	337.79	PSS4/1B	SLOPE	II A 2, II C 2	WETLAND	40	40							0.01			
2	G	4	337.79	337.82	U	N/A	II A 2, II C 2	UPLAND	157		157						0.03			
2	G	4	337.82	337.87	U	N/A	I A 2, II C 2	UPLAND	241		241						0.05			
2	G	5A	337.87	337.94	U	N/A	I A 2, II C 2	UPLAND	391		391							0.07		
2	G	5A	337.94	338.02	U	N/A	I A 3, II C 2	UPLAND	400		400							0.08		
2	G	5A	338.02	338.09	U	N/A	I A 2, II C 2	UPLAND	368		368							0.07		
2	G	5A	338.09	338.11	U	N/A	I C 2, II C 2	UPLAND	104		104							0.02		
2	G	5A	338.11	338.15	U	N/A	I A 2, II C 2	UPLAND	226		226							0.04		
2	G	4	338.15	338.19	U	N/A	I A 2, II C 2	UPLAND	214		214						0.04			
2	G	4	338.19	338.20	PSS1/4B	SLOPE	II C 2, II A 3	WETLAND	18	18							0.00			
2	G	4	338.20	338.20	U	N/A	II A 2	UPLAND	22		22						0.00			
2	G	4	338.20	338.20	PSS1/4B	SLOPE	II C 2, II A 3	WETLAND	18	18							0.00			
2	G	4	338.20	338.22	U	N/A	II A 2	UPLAND	102		102						0.02			
2	G	4	338.22	338.36	U	N/A	I A 2, II A 2	UPLAND	730		730						0.14			
2	G	4	338.36	338.38	PSS1/4B	SLOPE	II C 2, II A 3	WETLAND	80	80							0.02			
2	G	4	338.38	338.51	U	N/A	I A 2, II A 2	UPLAND	705		705						0.13			
2	G	4	338.51	338.53	PSS1/4B	SLOPE	II A 3, II C 2	WETLAND	113	113							0.02			
2	G	4	338.53	338.65	U	N/A	II A 2	UPLAND	618		618						0.12			
2	G	4	338.65	338.67	PFO4B	SLOPE	I A 2	WETLAND	105	105							0.02			

SPREAD	SECTION	ROW MODE	FROM MP	TO MP	NWI CODE	HGM CLASS	VIERECK	DESCRIPTION	LINEAR FEET	WETLAND FEET	UPLAND FEET	DISTURBED FEET	Comments	Mode 1 - Ice Workpad (miles)	Mode 2 - Frost Pack (miles)	Mode 3 - Timber Mats	Mode 4 - Granular Workpad	Mode 5A - Grade	Mode 5B - Mountain Grade	Stream & Flood Plain Crossings
2	G	4	338.67	338.74	U	N/A	II A 2	UPLAND	397		397						0.08			
2	G	4	338.74	338.76	U	N/A	I A 2, II C 2	UPLAND	97		97						0.02			
2	G	5A	338.76	339.02	U	N/A	I A 2, II C 2	UPLAND	1393		1393							0.26		
2	G	5A	339.02	339.10	U	N/A	I C 2, II C 2	UPLAND	381		381							0.07		
2	G	5A	339.10	339.10	U	N/A	I A 2, II C 2	UPLAND	27		27							0.01		
2	G	4	339.10	339.31	U	N/A	I A 2, II C 2	UPLAND	1109		1109						0.21			
2	G	4	339.31	339.37	U	N/A	II A 2, II C 2	UPLAND	285		285						0.05			
2	G	4	339.37	339.41	U	N/A	I A 2, II C 2	UPLAND	244		244						0.05			
2	G	4	339.41	339.46	U	N/A	II A 2, II C 2	UPLAND	263		263						0.05			
2	G	4	339.46	339.48	U	N/A	I A 2, II C 2	UPLAND	72		72						0.01			
2	G	4	339.48	339.50	U	N/A	II A 2, II C 2	UPLAND	105		105						0.02			
2	G	4	339.50	339.59	U	N/A	I A 2, II C 2	UPLAND	494		494						0.09			
2	G	4	339.59	339.64	U	N/A	II A 2, II C 2	UPLAND	261		261						0.05			
2	G	4	339.64	339.65	PSS1/4B	FLAT - ORGANIC	II C 2, II A 3	WETLAND	87	87							0.02			
2	G	4	339.65	339.76	U	N/A	I A 2, II C 2	UPLAND	547		547						0.10			
2	G	4	339.76	339.84	PSS1/4B	FLAT - ORGANIC	II C 2, II A 3	WETLAND	455	455							0.09			
2	G	4	339.84	339.88	PSS4/1B	FLAT - ORGANIC	II A 2, II C 2	WETLAND	192	192							0.04			
2	G	4	339.88	339.94	U	N/A	I A 2, II C 2	UPLAND	285		285						0.05			
2	G	4	339.94	340.16	PSS4/1B	FLAT - ORGANIC	II A 2, II C 2	WETLAND	1203	1203							0.23			
2	G	4	340.16	340.18	PSS1/4B	FLAT - ORGANIC	II C 2, II A 3	WETLAND	70	70							0.01			
2	G	4	340.18	340.27	PSS4/1B	FLAT - ORGANIC	II A 2, II C 2	WETLAND	501	501							0.09			
2	G	4	340.27	340.34	PSS1/4B	FLAT - ORGANIC	II C 2, II A 3	WETLAND	357	357							0.07			
2	H	4	340.34	340.43	PFO4/SS1B	FLAT - ORGANIC	I A 2, II C 2	WETLAND	456	456							0.09			
2	H	4	340.43	340.44	PSS1/4B	FLAT - ORGANIC	II C 2, II A 3	WETLAND	93	93							0.02			
2	H	5A	340.44	340.44	PSS1/4B	FLAT - ORGANIC	II C 2, II A 3	WETLAND	0	0								0.00		
2	H	5A	340.44	340.50	PSS1/EM1B	FLAT - ORGANIC	II C 2, III A 2	WETLAND	277	277								0.05		
2	H	5A	340.50	340.59	PSS1/4B	FLAT - ORGANIC	II C 2, II A 3	WETLAND	495	495								0.09		
2	H	5A	340.59	340.61	U	N/A	I C 1	UPLAND	120		120							0.02		
2	H	5A	340.61	340.63	PSS1/4B	FLAT - ORGANIC	II C 2, II A 3	WETLAND	114	114								0.02		
2	H	5A	340.63	340.64	U	N/A	I C 1	UPLAND	42		42							0.01		
2	H	5A	340.64	340.65	U	N/A	II B 1	UPLAND	32		32							0.01		
2	H	WB-S	340.65	340.65	U	N/A	II B 1	UPLAND	39		39									0.01
2	H	WB-S	340.65	340.66	R3UBH	RIVERINE	NONE	WETLAND	14	14										0.00
2	H	WB-S	340.66	340.67	U	N/A	II B 1	UPLAND	67		67									0.01
2	H	5A	340.67	340.70	U	N/A	II B 1	UPLAND	146		146							0.03		
2	H	5A	340.70	340.76	PSS1/FO4B	FLAT - ORGANIC	I A 3, II C 2	WETLAND	351	351								0.07		
2	H	5A	340.76	340.99	U	N/A	I A 2, II C 2	UPLAND	1183		1183							0.22		
2	H	4	340.99	341.05	U	N/A	I A 2, II C 2	UPLAND	351		351						0.07			
2	H	4	341.05	341.17	PSS1/FO4B	FLAT - ORGANIC	I A 3, II C 2	WETLAND	623	623							0.12			
2	H	4	341.17	341.18	PSS1/FO4B	SLOPE	I A 3, II C 2	WETLAND	57	57							0.01			
2	H	4	341.18	341.25	U	N/A	I A 2, II C 2	UPLAND	339		339						0.06			
2	H	4	341.25	341.43	PSS1/FO4B	FLAT - ORGANIC	I A 3, II C 2	WETLAND	970	970							0.18			
2	H	4	341.43	341.45	PSS1/EM1B	SLOPE	II C 2, III A 2	WETLAND	95	95							0.02			
2	H	4	341.45	341.49	PSS1/FO4B	FLAT - ORGANIC	I A 3, II C 2	WETLAND	190	190							0.04			
2	H	4	341.49	341.52	PSS1/EM1B	SLOPE	II C 2, III A 2	WETLAND	175	175							0.03			
2	H	4	341.52	341.62	PSS1/FO4B	FLAT - ORGANIC	I A 3, II C 2	WETLAND	549	549							0.10			
2	H	4	341.62	341.64	D	N/A	NONE	DISTURBED	114			114					0.02			
2	H	4	341.64	341.65	PSS1/FO4B	FLAT - ORGANIC	I A 3, II C 2	WETLAND	46	46							0.01			
2	H	4	341.65	341.66	PSS4/1B	FLAT - ORGANIC	II A 3, II C 2	WETLAND	60	60							0.01			
2	H	4	341.66	341.77	PSS1/FO4B	FLAT - ORGANIC	I A 3, II C 2	WETLAND	584	584							0.11			
2	H	4	341.77	341.78	PSS1/4B	FLAT - ORGANIC	II A 3, II C 2	WETLAND	48	48							0.01			
2	H	WB-S	341.78	341.80	PSS1/4B	FLAT - ORGANIC	II A 3, II C 2	WETLAND	60	60										0.01
2	H	4	341.80	341.80	PSS1/4B	FLAT - ORGANIC	II A 3, II C 2	WETLAND	4	4							0.00			
2	H	4	341.80	341.81	U	N/A	I A 1	UPLAND	66		66						0.01			
2	H	4	341.81	341.85	PFO4/SS3B	FLAT - ORGANIC	I A 2, II C 2	WETLAND	201	201							0.04			
2	H	4	341.85	341.89	U	N/A	I A 2, II C 2	UPLAND	239		239						0.05			
2	H	5A	341.89	342.65	U	N/A	I A 2, II C 2	UPLAND	4020		4020							0.76		
2	H	5A	342.65	342.66	D	N/A	NONE	DISTURBED	45			45						0.01		
2	H	5A	342.66	343.14	U	N/A	I A 2, II C 2	UPLAND	2524		2524							0.48		
2	H	5A	343.14	343.24	U	N/A	I A 3, II B 2	UPLAND	551		551							0.10		
2	H	5B	343.24	343.31	U	N/A	I A 3, II B 2	UPLAND	360		360								0.07	
2	H	5A	343.31	343.44	U	N/A	I A 3, II B 2	UPLAND	663		663							0.13		
2	H	5A	343.44	343.44	PSS1C/U	RIVERINE	II B 1	WETLAND	27	27								0.01		
2	H	WB-S	343.44	343.45	PSS1C/U	RIVERINE	II B 1	WETLAND	60	60										0.01
2	H	4	343.45	343.46	PSS1C/U	RIVERINE	II B 1	WETLAND	22	22							0.00			
2	H	4	343.46	343.48	PSS1/4B	FLAT - ORGANIC	I A 3, II B 2	WETLAND	124	124							0.02			
2	H	4	343.48	343.51	U	N/A	I A 2, II B 2	UPLAND	124		124						0.02			
2	H	5A	343.51	344.38	U	N/A	I A 2, II B 2	UPLAND	4620		4620							0.87		
2	H	4	344.38	344.78	U	N/A	I A 2, II B 2	UPLAND	2108		2108						0.40			
2	H	4	344.78	344.83	PSS1/FO4B	FLAT - ORGANIC	I A 3, II C 2	WETLAND	266	266							0.05			
2	H	4	344.83	344.84	PSS1B	SLOPE	II C 2, II B 2	WETLAND	56	56							0.01			
2	H	WB-S	344.84	344.84	PSS1B	SLOPE	II C 2, II B 2	WETLAND	7	7										0.00

SPREAD	SECTION	ROW MODE	FROM MP	TO MP	NWI CODE	HGM CLASS	VIERECK	DESCRIPTION	LINEAR FEET	WETLAND FEET	UPLAND FEET	DISTURBED FEET	Comments	Mode 1 - Ice Workpad (miles)	Mode 2 - Frost Pack (miles)	Mode 3 - Timber Mats	Mode 4 - Granular Workpad	Mode 5A - Grade	Mode 5B - Mountain Grade	Stream & Flood Plain Crossings
2	H	WB-S	344.84	344.85	PSS1/EM1C	RIVERINE	II B 2, III A 2	WETLAND	28	28										0.01
2	H	WB-S	344.85	344.85	PSS4/1B	FLAT - ORGANIC	II A 2, II C 2	WETLAND	25	25										0.00
2	H	4	344.85	344.90	PSS4/1B	FLAT - ORGANIC	II A 2, II C 2	WETLAND	244	244							0.05			
2	H	4	344.90	344.99	U	N/A	I A 2, II B 2	UPLAND	490		490						0.09			
2	H	4	344.99	345.13	U	N/A	I C 2, II B 2	UPLAND	757		757						0.14			
2	H	4	345.13	345.19	U	N/A	I A 2, II B 2	UPLAND	301		301						0.06			
2	H	4	345.19	345.29	U	N/A	II B 2	UPLAND	514		514						0.10			
2	H	4	345.29	345.41	U	N/A	I A 2, II B 2	UPLAND	664		664						0.13			
2	H	4	345.41	345.42	U	N/A	I C 2, II B 2	UPLAND	39		39						0.01			
2	H	4	345.42	345.48	U	N/A	I A 2, II B 2	UPLAND	303		303						0.06			
2	H	4	345.48	345.49	U	N/A	II A 1	UPLAND	53		53						0.01			
2	H	4	345.49	345.55	U	N/A	I A 2, II B 2	UPLAND	298		298						0.06			
2	H	4	345.55	345.60	U	N/A	II A 1	UPLAND	310		310						0.06			
2	H	4	345.60	346.24	U	N/A	I A 2, II B 2	UPLAND	3368		3368						0.64			
2	H	4	346.24	346.24	PSS1B	SLOPE	II B 2, II C 2	WETLAND	8	8							0.00			
2	H	WB-S	346.24	346.25	PSS1B	SLOPE	II B 2, II C 2	WETLAND	21	21										0.00
2	H	WB-S	346.25	346.26	PSS1C	RIVERINE	II B 2	WETLAND	39	39										0.01
2	H	4	346.26	346.26	PSS1C	RIVERINE	II B 2	WETLAND	12	12							0.00			
2	H	4	346.26	346.28	PSS1B	SLOPE	II B 2, II C 2	WETLAND	119	119							0.02			
2	H	4	346.28	346.30	PSS1B	FLAT - ORGANIC	II C 2	WETLAND	103	103							0.02			
2	H	4	346.30	346.68	U	N/A	II C 2, II B 2	UPLAND	1998		1998						0.38			
2	H	4	346.68	346.70	U	N/A	I A 2	UPLAND	109		109						0.02			
2	H	4	346.70	346.72	U	N/A	II C 2, II B 2	UPLAND	135		135						0.03			
2	H	4	346.72	346.76	PSS1/4B	FLAT - ORGANIC	II C 2, II A 3	WETLAND	182	182							0.03			
2	H	4	346.76	346.77	U	N/A	II C 2, II B 2	UPLAND	49		49						0.01			
2	H	4	346.77	347.38	U	N/A	I A 2	UPLAND	3242		3242						0.61			
2	H	4	347.38	347.38	PSS4/3B	FLAT - ORGANIC	II A 2, II C 2	WETLAND	16	16							0.00			
2	H	4	347.38	347.41	PEM1/SS1B	SLOPE	III A 2, II C 2	WETLAND	156	156							0.03			
2	H	4	347.41	347.60	PSS4/3B	FLAT - ORGANIC	II A 2, II C 2	WETLAND	983	983							0.19			
2	H	4	347.60	347.62	U	N/A	I A 2	UPLAND	127		127						0.02			
2	H	WB-S	347.62	347.64	U	N/A	I A 2	UPLAND	90		90									0.02
2	H	4	347.64	347.65	U	N/A	I A 2	UPLAND	46		46						0.01			
2	H	4	347.65	347.78	U	N/A	I A 2, II C 2	UPLAND	685		685						0.13			
2	H	4	347.78	347.80	D	N/A	NONE	DISTURBED	80			80					0.02			
2	H	4	347.80	347.83	U	N/A	I A 2, II C 2	UPLAND	185		185						0.04			
2	H	4	347.83	347.85	PSS4/1B	FLAT - ORGANIC	II A 2, II C 2	WETLAND	95	95							0.02			
2	I	4	347.85	348.00	U	N/A	I A 2, II C 2	UPLAND	792		792						0.15			
2	I	4	348.00	348.03	PSS4/1B	FLAT - ORGANIC	II A 2, II C 2	WETLAND	159	159							0.03			
2	I	4	348.03	348.09	U	N/A	I A 2, II C 2	UPLAND	303		303						0.06			
2	I	4	348.09	348.12	PSS4/1B	FLAT - ORGANIC	II A 2, II C 2	WETLAND	171	171							0.03			
2	I	4	348.12	348.13	PSS4/3B	FLAT - ORGANIC	II A 2, II C 2	WETLAND	78	78							0.01			
2	I	4	348.13	348.15	PSS4/1B	FLAT - ORGANIC	II A 2, II C 2	WETLAND	92	92							0.02			
2	I	4	348.15	348.16	PSS1/EM1C	FLAT - ORGANIC	II C 2, III A 2	WETLAND	78	78							0.01			
2	I	4	348.16	348.21	PSS4/1B	FLAT - ORGANIC	II A 2, II C 2	WETLAND	230	230							0.04			
2	I	4	348.21	348.22	U	N/A	I A 3, II C 2	UPLAND	73		73						0.01			
2	I	4	348.22	348.23	PSS4/1B	FLAT - ORGANIC	II A 2, II C 2	WETLAND	57	57							0.01			
2	I	4	348.23	348.24	U	N/A	I A 3, II C 2	UPLAND	30		30						0.01			
2	I	4	348.24	348.25	PSS4/1B	FLAT - ORGANIC	II A 2, II C 2	WETLAND	44	44							0.01			
2	I	4	348.25	348.27	U	N/A	I A 3, II C 2	UPLAND	113		113						0.02			
2	I	4	348.27	348.38	PSS4/1B	FLAT - ORGANIC	II A 2, II C 2	WETLAND	582	582							0.11			
2	I	4	348.38	348.39	U	N/A	I A 2, II C 2	UPLAND	45		45						0.01			
2	I	4	348.39	348.40	PFO4/SS1B	SLOPE	I A 2, II B 2	WETLAND	47	47							0.01			
2	I	4	348.40	348.46	U	N/A	II A 1	UPLAND	324		324						0.06			
2	I	4	348.46	348.47	D	N/A	NONE	DISTURBED	53			53					0.01			
2	I	4	348.47	348.48	U	N/A	II A 1	UPLAND	47		47						0.01			
2	I	4	348.48	348.50	PSS1/4B	FLAT - ORGANIC	II C 2, II A 3	WETLAND	99	99							0.02			
2	I	4	348.50	348.66	U	N/A	I A 2	UPLAND	896		896						0.17			
2	I	4	348.66	348.67	PFO4/SS1B	SLOPE	I A 2	WETLAND	25	25							0.00			
2	I	4	348.67	348.68	U	N/A	I A 2	UPLAND	65		65						0.01			
2	I	4	348.68	348.69	PFO4/SS1B	SLOPE	I A 2	WETLAND	37	37							0.01			
2	I	4	348.69	348.72	U	N/A	I A 2	UPLAND	156		156						0.03			
2	I	4	348.72	348.72	PFO4/SS1B	SLOPE	I A 2	WETLAND	26	26							0.00			
2	I	4	348.72	348.74	U	N/A	I A 2	UPLAND	67		67						0.01			
2	I	4	348.74	348.77	U	N/A	II A 2	UPLAND	192		192						0.04			
2	I	4	348.77	348.79	U	N/A	I A 2	UPLAND	84		84						0.02			
2	I	4	348.79	348.80	PFO4/SS1B	SLOPE	I A 2	WETLAND	51	51							0.01			
2	I	4	348.80	348.81	PFO4/SS1B	FLAT - ORGANIC	I A 2, II C 2	WETLAND	48	48							0.01			
2	I	4	348.81	348.83	U	N/A	I A 2	UPLAND	146		146						0.03			
2	I	4	348.83	348.85	PFO4/SS1B	FLAT - ORGANIC	I A 2, II C 2	WETLAND	57	57							0.01			
2	I	4	348.85	348.86	U	N/A	I A 2	UPLAND	101		101						0.02			
2	I	4	348.86	348.87	PFO4/SS1B	FLAT - ORGANIC	I A 2, II C 2	WETLAND	37	37							0.01			
2	I	4	348.87	348.95	U	N/A	I A 2	UPLAND	413		413						0.08			

SPREAD	SECTION	ROW MODE	FROM MP	TO MP	NWI CODE	HGM CLASS	VIERECK	DESCRIPTION	LINEAR FEET	WETLAND FEET	UPLAND FEET	DISTURBED FEET	Comments	Mode 1 - Ice Workpad (miles)	Mode 2 - Frost Pack (miles)	Mode 3 - Timber Mats	Mode 4 - Granular Workpad	Mode 5A - Grade	Mode 5B - Mountain Grade	Stream & Flood Plain Crossings
2	I	4	348.95	349.05	U	N/A	II A 1	UPLAND	540		540						0.10			
2	I	4	349.05	349.05	U	N/A	I A 2	UPLAND	4		4						0.00			
2	I	4	349.05	349.08	U	N/A	II A 1	UPLAND	127		127						0.02			
2	I	4	349.08	349.13	U	N/A	I A 2	UPLAND	275		275						0.05			
2	I	4	349.13	349.13	PFO4/SS4B	FLAT - ORGANIC	I A 2, II A 2	WETLAND	17	17							0.00			
2	I	4	349.13	349.15	U	N/A	I A 2	UPLAND	71		71						0.01			
2	I	4	349.15	349.18	PFO4/SS4B	FLAT - ORGANIC	I A 2, II A 2	WETLAND	203	203							0.04			
2	I	4	349.18	349.19	U	N/A	I A 2	UPLAND	14		14						0.00			
2	I	WB-W	349.19	349.20	U	N/A	I A 2	UPLAND	60		60									0.01
2	I	4	349.20	349.20	U	N/A	I A 2	UPLAND	20		20						0.00			
2	I	4	349.20	349.21	PFO4/SS4B	FLAT - ORGANIC	I A 2, II A 2	WETLAND	27	27							0.01			
2	I	4	349.21	349.22	PSS1/4B	FLAT - ORGANIC	II A 3, II C 2	WETLAND	44	44							0.01			
2	I	4	349.22	349.23	PFO4/SS4B	FLAT - ORGANIC	I A 2, II A 2	WETLAND	74	74							0.01			
2	I	4	349.23	349.60	U	N/A	I A 2	UPLAND	1980		1980						0.37			
2	I	4	349.60	349.69	PSS4B	SLOPE	II A 2	WETLAND	426	426							0.08			
2	I	4	349.69	349.70	PSS4/1B	RIVERINE	II A 2, II B 2	WETLAND	64	64							0.01			
2	I	4	349.70	349.71	PSS4/1B	SLOPE	II A 2, II B 2	WETLAND	89	89							0.02			
2	I	4	349.71	349.73	PSS4B	SLOPE	II A 2	WETLAND	109	109							0.02			
2	I	4	349.73	349.74	PSS4/1B	RIVERINE	II A 2, II B 2	WETLAND	33	33							0.01			
2	I	4	349.74	349.78	PSS4B	SLOPE	II A 2	WETLAND	220	220							0.04			
2	I	4	349.78	349.81	PSS4/1B	RIVERINE	II A 2, II B 2	WETLAND	126	126							0.02			
2	I	4	349.81	349.85	PSS4B	SLOPE	II A 2	WETLAND	223	223							0.04			
2	I	4	349.85	350.18	U	N/A	I A 2	UPLAND	1730		1730						0.33			
2	I	4	350.18	350.25	PSS1/4B	SLOPE	II B 1, I A 3	WETLAND	403	403							0.08			
2	I	4	350.25	350.31	U	N/A	I A 2	UPLAND	276		276						0.05			
2	I	4	350.31	350.35	PFO4/SS1B	SLOPE	I A 2, II B 2	WETLAND	241	241							0.05			
2	I	4	350.35	350.43	U	N/A	I A 2	UPLAND	401		401						0.08			
2	I	4	350.43	350.44	U	N/A	I A 2	UPLAND	63		63						0.01			
2	I	4	350.44	350.49	U	N/A	I A 2	UPLAND	266		266						0.05			
2	I	4	350.49	350.50	PSS4B	FLAT - ORGANIC	II A 2	WETLAND	50	50							0.01			
2	I	4	350.50	350.52	U	N/A	I A 2	UPLAND	100		100						0.02			
2	I	4	350.52	350.56	PSS4B	FLAT - ORGANIC	II A 2	WETLAND	201	201							0.04			
2	I	4	350.56	350.73	U	N/A	I A 2	UPLAND	901		901						0.17			
2	I	4	350.73	350.76	PSS1C	SLOPE	II B 1	WETLAND	183	183							0.03			
2	I	4	350.76	350.77	PSS1C	RIVERINE	II B 1	WETLAND	62	62							0.01			
2	I	4	350.77	350.85	PSS1C	SLOPE	II B 1	WETLAND	405	405							0.08			
2	I	4	350.85	350.88	PSS4/1B	FLAT - ORGANIC	I A 2, II A 2	WETLAND	135	135							0.03			
2	I	4	350.88	350.89	U	N/A	I A 2	UPLAND	104		104						0.02			
2	I	4	350.89	350.94	PSS4/1B	FLAT - ORGANIC	I A 2, II A 2	WETLAND	240	240							0.05			
2	I	4	350.94	350.98	U	N/A	I A 2	UPLAND	197		197						0.04			
2	I	4	350.98	351.04	PSS4/1B	FLAT - ORGANIC	I A 2, II A 2	WETLAND	343	343							0.06			
2	I	4	351.04	351.05	D	N/A	NONE	DISTURBED	38			38					0.01			
2	I	4	351.05	351.05	U	N/A	I A 2	UPLAND	27		27						0.01			
2	I	4	351.05	351.11	PSS4/1B	FLAT - ORGANIC	I A 2, II A 2	WETLAND	305	305							0.06			
2	I	4	351.11	351.21	U	N/A	I A 2	UPLAND	526		526						0.10			
2	I	4	351.21	351.25	PSS4/1B	SLOPE	I A 2, II A 2	WETLAND	190	190							0.04			
2	I	4	351.25	351.27	U	N/A	I C 2	UPLAND	123		123						0.02			
2	I	4	351.27	351.31	U	N/A	I A 2	UPLAND	215		215						0.04			
2	I	4	351.31	351.34	PSS1/4B	SLOPE	II B 1, I A 3	WETLAND	128	128							0.02			
2	I	4	351.34	351.34	PFO1/4C	RIVERINE	I C 1	WETLAND	20	20							0.00			
2	I	WB-W	351.34	351.34	PFO1/4C	RIVERINE	I C 1	WETLAND	23	23										0.00
2	I	WB-W	351.34	351.36	U	N/A	I A 2	UPLAND	67		67									0.01
2	I	4	351.36	351.64	U	N/A	I A 2	UPLAND	1501		1501						0.28			
2	I	4	351.64	351.65	PSS1B	SLOPE	II B 2	WETLAND	59	59							0.01			
2	I	4	351.65	351.70	U	N/A	I C 2	UPLAND	253		253						0.05			
2	I	4	351.70	351.71	PSS1/EM1B	FLAT - ORGANIC	II C 2, III A 2	WETLAND	51	51							0.01			
2	I	4	351.71	351.76	U	N/A	I A 2	UPLAND	284		284						0.05			
2	I	4	351.76	351.77	PFO4/SS4B	FLAT - ORGANIC	I A 2, II A 2	WETLAND	37	37							0.01			
2	I	4	351.77	351.77	U	N/A	I A 2	UPLAND	9		9						0.00			
2	I	4	351.77	351.79	U	N/A	I C 2	UPLAND	111		111						0.02			
2	I	4	351.79	351.80	PFO4/SS4B	FLAT - ORGANIC	I A 2, II A 2	WETLAND	55	55							0.01			
2	I	4	351.80	351.86	U	N/A	I A 2	UPLAND	287		287						0.05			
2	I	4	351.86	351.88	D	N/A	III A 1	DISTURBED	103			103					0.02			
2	I	4	351.88	352.00	U	N/A	I A 2	UPLAND	661		661						0.13			
2	I	4	352.00	352.03	PFO4/SS4B	FLAT - ORGANIC	I A 2, II A 2	WETLAND	135	135							0.03			
2	I	4	352.03	352.04	PSS1/EM1B	SLOPE	II C 2, III A 2	WETLAND	34	34							0.01			
2	I	4	352.04	352.04	PUBH	DEPRESSIONAL	NONE	WETLAND	50	50							0.01			
2	I	4	352.04	352.05	PSS4/1B	FLAT - ORGANIC	I A 2, II C 2	WETLAND	22	22							0.00			
2	I	4	352.05	352.14	U	N/A	I A 2	UPLAND	473		473						0.09			
2	I	4	352.14	352.21	PSS4/1B	FLAT - ORGANIC	I A 2, II C 2	WETLAND	390	390							0.07			
2	I	4	352.21	352.28	U	N/A	I A 2	UPLAND	335		335						0.06			
2	I	4	352.28	352.31	U	N/A	I C 2	UPLAND	169		169						0.03			

SPREAD	SECTION	ROW MODE	FROM MP	TO MP	NWI CODE	HGM CLASS	VIERECK	DESCRIPTION	LINEAR FEET	WETLAND FEET	UPLAND FEET	DISTURBED FEET	Comments	Mode 1 - Ice Workpad (miles)	Mode 2 - Frost Pack (miles)	Mode 3 - Timber Mats	Mode 4 - Granular Workpad	Mode 5A - Grade	Mode 5B - Mountain Grade	Stream & Flood Plain Crossings
2	I	4	352.31	352.37	U	N/A	I A 2	UPLAND	332		332						0.06			
2	I	4	352.37	352.55	U	N/A	I C 2	UPLAND	931		931						0.18			
2	I	4	352.55	352.65	U	N/A	I A 2	UPLAND	557		557						0.11			
2	I	4	352.65	352.66	PSS1/4B	FLAT - ORGANIC	II C 2, II A 3	WETLAND	49	49							0.01			
2	I	4	352.66	352.67	PEM1/SS1B	SLOPE	III A 2, II C 2	WETLAND	68	68							0.01			
2	I	4	352.67	352.70	U	N/A	I A 2	UPLAND	131		131						0.02			
2	I	4	352.70	352.75	PSS1/4B	FLAT - ORGANIC	II C 2, II A 3	WETLAND	280	280							0.05			
2	I	4	352.75	352.82	U	N/A	I A 2	UPLAND	362		362						0.07			
2	I	4	352.82	352.83	PSS1/4B	FLAT - ORGANIC	II C 2, II A 3	WETLAND	52	52							0.01			
2	I	4	352.83	352.87	PEM1/SS1B	SLOPE	III A 2, II C 2	WETLAND	208	208							0.04			
2	I	4	352.87	352.93	U	N/A	I A 2	UPLAND	320		320						0.06			
2	I	WB-W	352.93	352.93	U	N/A	I A 2	UPLAND	3		3									0.00
2	I	WB-W	352.93	352.94	PSS1/EM1B	SLOPE	II C 2, III A 2	WETLAND	44	44										0.01
2	I	WB-W	352.94	352.95	U	N/A	I A 2	UPLAND	43		43									0.01
2	I	4	352.95	352.96	U	N/A	I A 2	UPLAND	36		36						0.01			
2	I	4	352.96	353.05	U	N/A	I C 2	UPLAND	485		485						0.09			
2	I	4	353.05	353.08	PFO4B	FLAT - ORGANIC	I A 2	WETLAND	177	177							0.03			
2	I	4	353.08	353.10	U	N/A	I C 2	UPLAND	108		108						0.02			
2	I	4	353.10	353.13	PFO4B	FLAT - ORGANIC	I A 2	WETLAND	137	137							0.03			
2	I	4	353.13	353.14	PSS1/EM1B	FLAT - ORGANIC	II C 2, III A 2	WETLAND	55	55							0.01			
2	I	4	353.14	353.16	PFO4B	FLAT - ORGANIC	I A 2	WETLAND	144	144							0.03			
2	I	4	353.16	353.28	PSS1/EM1B	FLAT - ORGANIC	II C 2, III A 2	WETLAND	623	623							0.12			
2	I	4	353.28	353.29	PSS1/EM1B	SLOPE	II C 2, III A 2	WETLAND	66	66							0.01			
2	I	4	353.29	353.45	U	N/A	I C 2	UPLAND	800		800						0.15			
2	I	4	353.45	353.58	U	N/A	II C 2, II B 2	UPLAND	708		708						0.13			
2	I	4	353.58	353.60	U	N/A	I C 2	UPLAND	120		120						0.02			
2	I	4	353.60	353.64	PFO4/SS3B	SLOPE	I A 2, II C 2	WETLAND	182	182							0.03			
2	I	4	353.64	353.64	PSS1B	FLAT - ORGANIC	II C 2, II B 2	WETLAND	30	30							0.01			
2	I	4	353.64	353.68	U	N/A	I C 2, I A 2	UPLAND	203		203						0.04			
2	I	4	353.68	353.69	PSS1B	FLAT - ORGANIC	II C 2, II B 2	WETLAND	20	20							0.00			
2	I	4	353.69	353.76	U	N/A	I C 2, I A 2	UPLAND	401		401						0.08			
2	I	4	353.76	353.89	PSS1B	FLAT - ORGANIC	II C 2, II B 2	WETLAND	655	655							0.12			
2	I	4	353.89	353.98	U	N/A	II C 2, II B 2	UPLAND	501		501						0.09			
2	I	4	353.98	353.99	PSS1/EM1B	FLAT - ORGANIC	II C 2, III A 2	WETLAND	42	42							0.01			
2	I	4	353.99	354.02	U	N/A	II C 2, II B 2	UPLAND	163		163						0.03			
2	I	4	354.02	354.25	PSS1/EM1B	FLAT - ORGANIC	II C 2, III A 2	WETLAND	1196	1196							0.23			
2	I	4	354.25	354.33	U	N/A	I C 2, II B 2	UPLAND	427		427						0.08			
2	I	4	354.33	354.76	U	N/A	I C 2, II B 2	UPLAND	2260		2260						0.43			
2	I	WB-W	354.76	354.77	U	N/A	I C 2, II B 2	UPLAND	90		90									0.02
2	I	4	354.77	354.84	U	N/A	I C 2, II B 2	UPLAND	368		368						0.07			
2	I	4	354.84	354.94	PSS1/EM1B	FLAT - ORGANIC	II C 2, II B 2	WETLAND	497	497							0.09			
2	I	4	354.94	355.07	U	N/A	II C 2, II B 2	UPLAND	731		731						0.14			
2	I	4	355.07	355.09	U	N/A	I C 2, II B 2	UPLAND	102		102						0.02			
2	I	4	355.09	355.55	U	N/A	II C 2, II B 2	UPLAND	2393		2393						0.45			
2	I	4	355.55	355.55	PSS1/EM1B	FLAT - ORGANIC	II C 2, III A 2	WETLAND	21	21							0.00			
2	I	4	355.55	355.61	PSS1/EM1B	FLAT - ORGANIC	II C 2, III A 2	WETLAND	314	314							0.06			
2	I	4	355.61	355.63	PSS1/FO4B	SLOPE	I A 3, II B 2	WETLAND	104	104							0.02			
2	I	WB-W	355.63	355.63	PSS1/FO4B	SLOPE	I A 3, II B 2	WETLAND	15	15										0.00
2	I	WB-W	355.63	355.64	U	N/A	I A 2, II B 2	UPLAND	33		33									0.01
2	I	WB-W	355.64	355.64	PSS1/4C	RIVERINE	I A 3, II B 2	WETLAND	12	12										0.00
2	I	4	355.64	355.64	PSS1/4C	RIVERINE	I A 3, II B 2	WETLAND	19	19							0.00			
2	I	4	355.64	355.70	PSS1B	FLAT - ORGANIC	II C 2	WETLAND	276	276							0.05			
2	I	4	355.70	355.75	U	N/A	II C 2, II B 2	UPLAND	293		293						0.06			
2	I	4	355.75	355.87	PSS1/EM1B	FLAT - ORGANIC	II C 2, III A 2	WETLAND	621	621							0.12			
2	J	4	355.87	355.88	PSS1B	FLAT - ORGANIC	II C 2	WETLAND	45	45							0.01			
2	J	4	355.88	356.07	PEM1E	DEPRESSIONAL	III A 2	WETLAND	1032	1032							0.20			
2	J	4	356.07	356.12	PSS1B	FLAT - ORGANIC	II C 2	WETLAND	219	219							0.04			
2	J	4	356.12	356.24	PSS1/EM1B	FLAT - ORGANIC	II C 2, III A 2	WETLAND	675	675							0.13			
2	J	WB-S	356.24	356.24	PSS1/EM1B	FLAT - ORGANIC	II C 2, III A 2	WETLAND	7	7										0.00
2	J	WB-S	356.24	356.27	U	N/A	II B 2, II C 2	UPLAND	112		112									0.02
2	J	WB-S	356.27	356.27	U	N/A	I B 2, II B 2	UPLAND	47		47									0.01
2	J	WB-S	356.27	356.69	R2UBH	RIVERINE	NONE	WETLAND	2167	2167										0.41
2	J	WB-S	356.69	356.71	U	N/A	II A 2, I A 2	UPLAND	108		108									0.02
2	J	WB-S	356.71	356.71	U	N/A	I C 2	UPLAND	20		20									0.00
2	J	4	356.71	356.73	U	N/A	I C 2	UPLAND	109		109						0.02			
2	J	4	356.73	356.82	U	N/A	II A 2, I A 2	UPLAND	454		454						0.09			
2	J	4	356.82	356.88	U	N/A	II A 2	UPLAND	332		332						0.06			
2	J	4	356.88	356.92	U	N/A	II A 2, I A 2	UPLAND	195		195						0.04			
2	J	4	356.92	356.97	U	N/A	II A 2	UPLAND	282		282						0.05			
2	J	4	356.97	357.04	U	N/A	II A 2, I A 2	UPLAND	362		362						0.07			
2	J	4	357.04	357.10	U	N/A	II A 2	UPLAND	347		347						0.07			
2	J	4	357.10	357.36	U	N/A	II A 2, I A 2	UPLAND	1340		1340						0.25			

SPREAD	SECTION	ROW MODE	FROM MP	TO MP	NWI CODE	HGM CLASS	VIERECK	DESCRIPTION	LINEAR FEET	WETLAND FEET	UPLAND FEET	DISTURBED FEET	Comments	Mode 1 - Ice Workpad (miles)	Mode 2 - Frost Pack (miles)	Mode 3 - Timber Mats	Mode 4 - Granular Workpad	Mode 5A - Grade	Mode 5B - Mountain Grade	Stream & Flood Plain Crossings
2	J	4	357.36	357.47	U	N/A	II A 2	UPLAND	582		582						0.11			
2	J	4	357.47	357.50	D	N/A	II C 2, III A 1	DISTURBED	170			170					0.03			
2	J	4	357.50	357.56	U	N/A	II A 2	UPLAND	294		294						0.06			
2	J	4	357.56	357.56	PSS1C	SLOPE	II B 1, II C 2	WETLAND	47	47							0.01			
2	J	4	357.56	357.60	U	N/A	II A 2	UPLAND	165		165						0.03			
2	J	4	357.60	357.61	D	N/A	II C 2, III A 1	DISTURBED	87			87					0.02			
2	J	4	357.61	357.94	U	N/A	II A 2	UPLAND	1716		1716						0.33			
2	J	4	357.94	357.95	D	N/A	NONE	DISTURBED	89			89					0.02			
2	J	4	357.95	357.98	U	N/A	II A 2	UPLAND	119		119						0.02			
2	J	4	357.98	358.27	U	N/A	II A 2	UPLAND	1544		1544						0.29			
2	J	4	358.27	358.28	D	N/A	NONE	DISTURBED	33			33					0.01			
2	J	4	358.28	358.60	U	N/A	II A 2	UPLAND	1721		1721						0.33			
2	J	WB-S	358.60	358.61	U	N/A	II A 2	UPLAND	20		20									0.00
2	J	WB-S	358.61	358.61	PSS1/FO4C	SLOPE	I A 3, II B 1	WETLAND	40	40										0.01
2	J	4	358.61	358.62	PSS1/FO4C	SLOPE	I A 3, II B 1	WETLAND	13	13							0.00			
2	J	4	358.62	358.67	U	N/A	II A 2	UPLAND	300		300						0.06			
2	J	4	358.67	358.70	PSS1/FO4C	SLOPE	I A 3, II B 1	WETLAND	169	169							0.03			
2	J	4	358.70	358.82	U	N/A	II A 2	UPLAND	597		597						0.11			
2	J	4	358.82	358.94	U	N/A	I C 3, II B 2	UPLAND	662		662						0.13			
2	J	4	358.94	358.95	D	N/A	NONE	DISTURBED	43			43					0.01			
2	J	4	358.95	359.09	U	N/A	I A 2	UPLAND	736		736						0.14			
2	J	4	359.09	359.12	U	N/A	II A 2	UPLAND	155		155						0.03			
2	J	4	359.12	359.12	PSS1/FO4B	SLOPE	I A 3, II B 2	WETLAND	13	13							0.00			
2	J	4	359.12	359.18	U	N/A	II A 2	UPLAND	287		287						0.05			
2	J	4	359.18	359.18	PSS1/FO4B	SLOPE	I A 3, II B 2	WETLAND	9	9							0.00			
2	J	4	359.18	359.24	U	N/A	II A 2	UPLAND	348		348						0.07			
2	J	4	359.24	359.25	PSS4/FO4B	SLOPE	I A 2, II B 2	WETLAND	17	17							0.00			
2	J	4	359.25	359.30	U	N/A	II A 2	UPLAND	301		301						0.06			
2	J	4	359.30	359.31	PSS4/FO4B	SLOPE	I A 2, II B 2	WETLAND	19	19							0.00			
2	J	4	359.31	359.37	U	N/A	II A 2	UPLAND	308		308						0.06			
2	J	4	359.37	359.39	PSS4B	FLAT - ORGANIC	II A 2	WETLAND	143	143							0.03			
2	J	4	359.39	359.40	PSS4/FO4B	SLOPE	I A 2, II B 2	WETLAND	30	30							0.01			
2	J	4	359.40	359.44	PSS4B	FLAT - ORGANIC	II A 2	WETLAND	211	211							0.04			
2	J	4	359.44	359.44	PSS4/FO4B	SLOPE	I A 2, II B 2	WETLAND	24	24							0.00			
2	J	4	359.44	359.56	PSS4B	FLAT - ORGANIC	II A 2	WETLAND	614	614							0.12			
2	J	4	359.56	359.60	U	N/A	I A 2	UPLAND	237		237						0.04			
2	J	4	359.60	359.62	PSS4B	FLAT - ORGANIC	II A 2	WETLAND	95	95							0.02			
2	J	4	359.62	359.65	PSS1/4B	SLOPE	II B 2, II A 3	WETLAND	138	138							0.03			
2	J	4	359.65	359.67	PSS4B	FLAT - ORGANIC	II A 2	WETLAND	107	107							0.02			
2	J	4	359.67	359.70	PSS1/EM1C	SLOPE	II C 2, III A 3	WETLAND	177	177							0.03			
2	J	4	359.70	359.85	PSS4B	FLAT - ORGANIC	II A 2	WETLAND	790	790							0.15			
2	J	4	359.85	359.90	U	N/A	II A 2	UPLAND	250		250						0.05			
2	J	4	359.90	359.94	PSS4B	FLAT - ORGANIC	II A 2	WETLAND	196	196							0.04			
2	J	4	359.94	359.97	U	N/A	II A 2	UPLAND	163		163						0.03			
2	J	4	359.97	360.04	U	N/A	I A 2	UPLAND	383		383						0.07			
2	J	4	360.04	360.06	PSS4B	FLAT - ORGANIC	II A 2	WETLAND	97	97							0.02			
2	J	4	360.06	360.27	U	N/A	I A 2	UPLAND	1101		1101						0.21			
2	J	4	360.27	360.29	U	N/A	II A 2	UPLAND	122		122						0.02			
2	J	4	360.29	360.37	PSS4B	FLAT - ORGANIC	II A 2	WETLAND	412	412							0.08			
2	J	4	360.37	360.47	U	N/A	II A 2	UPLAND	556		556						0.11			
2	J	4	360.47	360.49	PSS1B	FLAT - ORGANIC	II C 2	WETLAND	77	77							0.01			
2	J	4	360.49	360.50	PSS4B	SLOPE	II A 2	WETLAND	71	71							0.01			
2	J	4	360.50	360.51	PSS1B	FLAT - ORGANIC	II C 2	WETLAND	32	32							0.01			
2	J	4	360.51	360.59	U	N/A	II C 2	UPLAND	429		429						0.08			
2	J	4	360.59	360.61	PSS1B	SLOPE	II C 2	WETLAND	128	128							0.02			
2	J	4	360.61	360.61	PSS1/4B	SLOPE	II C 2, I A 3	WETLAND	11	11							0.00			
2	J	4	360.61	360.63	PSS4B	FLAT - ORGANIC	II A 2	WETLAND	64	64							0.01			
2	J	4	360.63	360.75	U	N/A	II A 2	UPLAND	674		674						0.13			
2	J	4	360.75	360.79	PSS4B	FLAT - ORGANIC	II A 2	WETLAND	181	181							0.03			
2	J	4	360.79	360.80	PSS1/4B	SLOPE	II C 1, I A 3	WETLAND	81	81							0.02			
2	J	4	360.80	360.83	PSS4B	FLAT - ORGANIC	II A 2	WETLAND	126	126							0.02			
2	J	4	360.83	360.87	U	N/A	II A 2	UPLAND	236		236						0.04			
2	J	4	360.87	360.96	PSS4B	FLAT - ORGANIC	II A 2	WETLAND	436	436							0.08			
2	J	4	360.96	361.05	U	N/A	II A 2	UPLAND	477		477						0.09			
2	J	4	361.05	361.09	PSS4B	FLAT - ORGANIC	II A 2	WETLAND	254	254							0.05			
2	J	4	361.09	361.11	PSS1/4B	SLOPE	II B 2, II A 2	WETLAND	108	108							0.02			
2	J	4	361.11	361.12	PSS4B	FLAT - ORGANIC	II A 2	WETLAND	29	29							0.01			
2	J	4	361.12	361.13	PSS1/4B	SLOPE	II B 2, II A 2	WETLAND	49	49							0.01			
2	J	4	361.13	361.18	U	N/A	I A 2, II C 2	UPLAND	250		250						0.05			
2	J	4	361.18	361.20	PSS1/4B	SLOPE	II B 2, II A 2	WETLAND	132	132							0.03			
2	J	4	361.20	361.28	PSS1/4B	FLAT - ORGANIC	II B 2, II A 2	WETLAND	424	424							0.08			
2	J	4	361.28	361.35	U	N/A	I A 2, II C 2	UPLAND	343		343						0.07			

SPREAD	SECTION	ROW MODE	FROM MP	TO MP	NWI CODE	HGM CLASS	VIERECK	DESCRIPTION	LINEAR FEET	WETLAND FEET	UPLAND FEET	DISTURBED FEET	Comments	Mode 1 - Ice Workpad (miles)	Mode 2 - Frost Pack (miles)	Mode 3 - Timber Mats	Mode 4 - Granular Workpad	Mode 5A - Grade	Mode 5B - Mountain Grade	Stream & Flood Plain Crossings
2	J	4	361.35	361.35	PSS1/4B	SLOPE	II B 2, II A 2	WETLAND	37	37							0.01			
2	J	4	361.35	361.51	U	N/A	I A 2, II C 2	UPLAND	829		829						0.16			
2	J	4	361.51	361.60	PSS1/4B	FLAT - ORGANIC	II B 2, II A 2	WETLAND	451	451							0.09			
2	J	4	361.60	361.90	U	N/A	I A 2, II C 2	UPLAND	1594		1594						0.30			
2	J	4	361.90	361.93	PSS4/1B	FLAT - ORGANIC	II A 2, II B 2	WETLAND	185	185							0.03			
2	J	4	361.93	362.03	U	N/A	I A 2, II C 2	UPLAND	506		506						0.10			
2	J	4	362.03	362.18	PSS4/1B	FLAT - ORGANIC	II A 2, II B 2	WETLAND	775	775							0.15			
2	J	4	362.18	362.24	U	N/A	I A 2, II C 2	UPLAND	322		322						0.06			
2	J	4	362.24	362.26	PSS4/1B	SLOPE	II A 2, II B 2	WETLAND	105	105							0.02			
2	J	4	362.26	362.35	PSS4/1B	FLAT - ORGANIC	II A 2, II B 2	WETLAND	488	488							0.09			
2	J	4	362.35	362.36	PSS4/1B	SLOPE	II A 2, II B 2	WETLAND	79	79							0.02			
2	J	4	362.36	362.40	PSS4/1B	FLAT - ORGANIC	II A 2, II B 2	WETLAND	208	208							0.04			
2	J	4	362.40	362.46	U	N/A	I A 2, II C 2	UPLAND	314		314						0.06			
2	J	4	362.46	362.48	PSS4/1B	SLOPE	I A 2, II B 2	WETLAND	95	95							0.02			
2	J	4	362.48	363.48	U	N/A	I A 2, II C 2	UPLAND	5285		5285						1.00			
2	J	4	363.48	363.49	D	N/A	NONE	DISTURBED	28			28					0.01			
2	J	4	363.49	363.49	PFO4/SS1B	SLOPE	I A 2, II B 2	WETLAND	30	30							0.01			
2	J	4	363.49	363.55	U	N/A	I A 2, II B 2	UPLAND	300		300						0.06			
2	J	4	363.55	363.56	PSS1A	RIVERINE	II B 2, II A 3	WETLAND	37	37							0.01			
2	J	4	363.56	363.60	U	N/A	I A 2, II B 2	UPLAND	230		230						0.04			
2	J	4	363.60	364.71	U	N/A	I A 2, II B 2	UPLAND	5887		5887						1.11			
2	J	WB-S	364.71	364.72	U	N/A	I A 2, II B 2	UPLAND	26		26									0.00
2	J	WB-S	364.72	364.73	PSS1/FO4C	RIVERINE	I A 3, II B 2	WETLAND	40	40										0.01
2	J	WB-S	364.73	364.73	U	N/A	I A 2, II B 2	UPLAND	24		24									0.00
2	J	4	364.73	365.49	U	N/A	I A 2, II B 2	UPLAND	3989		3989						0.76			
2	J	4	365.49	365.53	U	N/A	I C 2, II B 2	UPLAND	237		237						0.04			
2	J	4	365.53	365.60	U	N/A	I A 2, II B 2	UPLAND	358		358						0.07			
2	J	4	365.60	365.63	PSS4/1B	FLAT - ORGANIC	II A 2, II C 2	WETLAND	161	161							0.03			
2	J	4	365.63	365.64	PSS4/1B	FLAT - ORGANIC	II A 2, II C 2	WETLAND	46	46							0.01			
2	J	4	365.64	365.76	PSS4/1B	FLAT - ORGANIC	II A 2, II C 2	WETLAND	643	643							0.12			
2	J	4	365.76	365.78	PSS1/FO4B	SLOPE	I A 3, II B 2	WETLAND	83	83							0.02			
2	J	4	365.78	365.81	U	N/A	II A 2	UPLAND	185		185						0.04			
2	J	4	365.81	365.86	PSS1/4B	FLAT - ORGANIC	II A 3, II C 2	WETLAND	238	238							0.05			
2	J	4	365.86	365.86	U	N/A	II A 2	UPLAND	29		29						0.01			
2	J	WB-S	365.86	365.87	U	N/A	II A 2	UPLAND	14		14									0.00
2	J	WB-S	365.87	365.88	PSS1/FO4A	RIVERINE	I A 3, II B 2	WETLAND	63	63										0.01
2	J	WB-S	365.88	365.88	PSS1/4B	FLAT - ORGANIC	II A 3, II C 2	WETLAND	12	12										0.00
2	J	4	365.88	365.88	PSS1/4B	FLAT - ORGANIC	II A 3, II C 2	WETLAND	9	9							0.00			
2	J	4	365.88	365.90	PSS4/1B	FLAT - ORGANIC	II A 2, II C 2	WETLAND	100	100							0.02			
2	J	4	365.90	365.92	PSS1/4B	FLAT - ORGANIC	II A 3, II C 2	WETLAND	86	86							0.02			
2	J	4	365.92	365.94	PSS4/1B	FLAT - ORGANIC	II A 2, II C 2	WETLAND	144	144							0.03			
2	J	4	365.94	365.97	PSS1/4B	FLAT - ORGANIC	II A 3, II C 2	WETLAND	145	145							0.03			
2	J	4	365.97	365.98	PSS4/1B	FLAT - ORGANIC	II A 2, II C 2	WETLAND	24	24							0.00			
2	J	4	365.98	365.98	PSS1A	RIVERINE	II B 1	WETLAND	1	1							0.00			
2	J	WB-S	365.98	365.98	PSS1A	RIVERINE	II B 1	WETLAND	27	27										0.01
2	J	WB-S	365.98	365.99	U	N/A	II A 2	UPLAND	33		33									0.01
2	J	4	365.99	365.99	U	N/A	II A 2	UPLAND	5		5						0.00			
2	J	4	365.99	366.28	PSS4B	FLAT - ORGANIC	II A 2, II C 2	WETLAND	1559	1559							0.30			
2	J	4	366.28	366.29	PSS1/4B	FLAT - ORGANIC	II A 3, II C 2	WETLAND	26	26							0.00			
2	J	4	366.29	366.31	PSS4/EM1C	SLOPE	II A 2, III A 2	WETLAND	112	112							0.02			
2	J	4	366.31	366.43	PSS4/1B	FLAT - ORGANIC	II A 2, II C 2	WETLAND	653	653							0.12			
2	J	4	366.43	366.44	PSS1/4B	FLAT - ORGANIC	II A 3, II C 2	WETLAND	35	35							0.01			
2	J	4	366.44	366.47	PSS4/1B	FLAT - ORGANIC	II A 2, II C 2	WETLAND	164	164							0.03			
2	J	4	366.47	366.48	PSS4/1B	FLAT - ORGANIC	II A 2, II C 2	WETLAND	69	69							0.01			
2	J	4	366.48	366.78	PSS4/1B	FLAT - ORGANIC	II A 2, II C 2	WETLAND	1547	1547							0.29			
2	J	4	366.78	366.78	PSS1/4B	FLAT - ORGANIC	II A 3, II C 2	WETLAND	27	27							0.01			
2	J	4	366.78	366.82	PSS4/EM1C	SLOPE	II A 2, III A 2	WETLAND	193	193							0.04			
2	J	4	366.82	366.82	PSS1C	RIVERINE	II B 1	WETLAND	20	20							0.00			
2	J	WB-S	366.82	366.83	PSS1C	RIVERINE	II B 1	WETLAND	58	58										0.01
2	J	WB-S	366.83	366.83	PSS1/4B	FLAT - ORGANIC	II C 2, II A 3	WETLAND	2	2										0.00
2	J	5A	366.83	366.86	PSS1/4B	FLAT - ORGANIC	II C 2, II A 3	WETLAND	133	133								0.03		
2	J	5A	366.86	367.07	U	N/A	I C 2	UPLAND	1120		1120							0.21		
2	J	5A	367.07	367.13	U	N/A	I A 2	UPLAND	315		315							0.06		
2	J	5A	367.13	367.17	U	N/A	I C 2	UPLAND	231		231							0.04		
2	J	5A	367.17	367.25	U	N/A	I A 2	UPLAND	393		393							0.07		
2	J	5A	367.25	367.27	U	N/A	I C 2	UPLAND	85		85							0.02		
2	J	5A	367.27	367.31	U	N/A	I A 2	UPLAND	231		231							0.04		
2	J	5A	367.31	367.33	U	N/A	I C 2	UPLAND	92		92							0.02		
2	J	5A	367.33	367.35	U	N/A	I A 2	UPLAND	116		116							0.02		
2	J	5A	367.35	367.40	U	N/A	I C 2	UPLAND	288		288							0.05		
2	J	5A	367.40	367.52	U	N/A	I A 2	UPLAND	635		635							0.12		
2	J	5A	367.52	367.57	U	N/A	I C 2	UPLAND	223		223							0.04		

SPREAD	SECTION	ROW MODE	FROM MP	TO MP	NWI CODE	HGM CLASS	VIERECK	DESCRIPTION	LINEAR FEET	WETLAND FEET	UPLAND FEET	DISTURBED FEET	Comments	Mode 1 - Ice Workpad (miles)	Mode 2 - Frost Pack (miles)	Mode 3 - Timber Mats	Mode 4 - Granular Workpad	Mode 5A - Grade	Mode 5B - Mountain Grade	Stream & Flood Plain Crossings
2	J	5A	367.57	367.74	U	N/A	I A 2	UPLAND	923		923							0.17		
2	J	5A	367.74	368.09	U	N/A	I C 2	UPLAND	1829		1829							0.35		
2	J	5A	368.09	368.22	U	N/A	I A 2	UPLAND	719		719							0.14		
2	J	5A	368.22	368.23	D	N/A	NONE	DISTURBED	34			34						0.01		
2	J	5A	368.23	368.50	U	N/A	I C 1	UPLAND	1406		1406							0.27		
2	J	5A	368.50	368.56	U	N/A	I C 2, II C 2	UPLAND	339		339							0.06		
2	J	5A	368.56	368.75	U	N/A	I A 2, II C 2	UPLAND	985		985							0.19		
2	J	5A	368.75	368.87	U	N/A	I C 2, II C 2	UPLAND	669		669							0.13		
2	J	5A	368.87	368.92	U	N/A	I A 2, II C 2	UPLAND	234		234							0.04		
2	J	5A	368.92	368.98	U	N/A	I C 2	UPLAND	326		326							0.06		
2	J	5A	368.98	369.01	U	N/A	I A 2, II C 2	UPLAND	180		180							0.03		
2	J	5A	369.01	369.02	U	N/A	I C 2	UPLAND	51		51							0.01		
2	J	5A	369.02	369.46	U	N/A	I A 2, II C 2	UPLAND	2314		2314							0.44		
2	J	4	369.46	369.55	U	N/A	I A 2, II C 2	UPLAND	470		470						0.09			
2	J	4	369.55	369.66	PSS1/4B	FLAT - ORGANIC	II C 2, II A 2	WETLAND	562	562							0.11			
2	J	4	369.66	369.67	PSS1/4B	FLAT - ORGANIC	II C 2, II A 2	WETLAND	64	64							0.01			
2	J	4	369.67	369.69	U	N/A	I C 2, II B 2	UPLAND	91		91						0.02			
2	J	WB-S	369.69	369.70	U	N/A	I C 2, II B 2	UPLAND	60		60									0.01
2	J	4	369.70	369.70	U	N/A	I C 2, II B 2	UPLAND	17		17						0.00			
2	J	4	369.70	369.72	PSS1/4B	FLAT - ORGANIC	II A 3, II C 2	WETLAND	123	123							0.02			
2	J	4	369.72	369.75	U	N/A	I A 2, II B 2	UPLAND	136		136						0.03			
2	J	4	369.75	369.75	PSS1/4B	FLAT - ORGANIC	II A 3, II C 2	WETLAND	23	23							0.00			
2	J	4	369.75	369.80	U	N/A	I A 2, II B 2	UPLAND	224		224						0.04			
2	J	4	369.80	369.80	PFO4/SS1C	RIVERINE	I A 2, II B 2	WETLAND	18	18							0.00			
2	J	4	369.80	369.81	U	N/A	I A 2, II B 2	UPLAND	55		55						0.01			
2	J	4	369.81	369.82	PSS4B	FLAT - ORGANIC	II A 2	WETLAND	75	75							0.01			
2	J	4	369.82	369.89	U	N/A	I A 2, II B 2	UPLAND	328		328						0.06			
2	J	4	369.89	369.90	PFO4/SS1C	RIVERINE	I A 2, II B 2	WETLAND	52	52							0.01			
2	J	WB-S	369.90	369.90	PFO4/SS1C	RIVERINE	I A 2, II B 2	WETLAND	8	8										0.00
2	J	WB-S	369.90	369.90	U	N/A	I A 2, II B 2	UPLAND	35		35									0.01
2	J	WB-S	369.90	369.91	PFO4/SS1C	RIVERINE	I A 2, II B 2	WETLAND	15	15										0.00
2	J	WB-S	369.91	369.91	U	N/A	I A 2, II B 2	UPLAND	2		2									0.00
2	J	4	369.91	369.91	U	N/A	I A 2, II B 2	UPLAND	29		29						0.01			
2	J	4	369.91	369.94	PSS4B	FLAT - ORGANIC	I A 2, II C 2	WETLAND	131	131							0.02			
2	J	4	369.94	369.96	U	N/A	I A 2, II B 2	UPLAND	129		129						0.02			
2	J	4	369.96	369.97	PSS4/1B	SLOPE	II A 2, II C 2	WETLAND	35	35							0.01			
2	J	4	369.97	369.97	PFO4/SS4B	FLAT - ORGANIC	I A 2, II C 2	WETLAND	1	1							0.00			
2	J	4	369.97	370.00	PFO4/SS4B	FLAT - ORGANIC	I A 2, II C 2	WETLAND	162	162							0.03			
2	J	4	370.00	370.04	U	N/A	I A 2	UPLAND	204		204						0.04			
2	J	4	370.04	370.19	U	N/A	I C 1, I B 1	UPLAND	802		802						0.15			
2	J	4	370.19	370.22	D	N/A	NONE	DISTURBED	141			141					0.03			
2	J	4	370.22	370.22	U	N/A	I A 2	UPLAND	25		25						0.00			
2	J	4	370.22	370.23	PSS1/EM1C	SLOPE	II B 2, III A 2	WETLAND	57	57							0.01			
2	J	4	370.23	370.24	U	N/A	I A 2	UPLAND	39		39						0.01			
2	J	4	370.24	370.24	PFO4/SS1B	SLOPE	I A 2	WETLAND	23	23							0.00			
2	J	4	370.24	370.27	U	N/A	I A 2	UPLAND	122		122						0.02			
2	J	4	370.27	370.27	PFO4/SS1B	SLOPE	I A 2	WETLAND	18	18							0.00			
2	J	4	370.27	370.31	U	N/A	I A 2	UPLAND	208		208						0.04			
2	J	4	370.31	370.31	PFO4/SS1B	SLOPE	I A 2	WETLAND	18	18							0.00			
2	J	4	370.31	370.32	U	N/A	I A 2	UPLAND	54		54						0.01			
2	J	4	370.32	370.33	PFO4/SS1B	SLOPE	I A 2	WETLAND	13	13							0.00			
2	J	4	370.33	370.34	U	N/A	I A 2	UPLAND	59		59						0.01			
2	J	4	370.34	370.34	PFO4/SS1B	SLOPE	I A 2	WETLAND	37	37							0.01			
2	J	4	370.34	370.38	U	N/A	I A 2	UPLAND	170		170						0.03			
2	J	4	370.38	370.40	U	N/A	I C 2	UPLAND	118		118						0.02			
2	J	4	370.40	370.53	U	N/A	I A 2	UPLAND	690		690						0.13			
2	J	4	370.53	370.55	D	N/A	NONE	DISTURBED	107			107					0.02			
2	J	4	370.55	370.55	PSS4B	SLOPE	II A 2	WETLAND	21	21							0.00			
2	J	4	370.55	370.67	U	N/A	I A 2	UPLAND	589		589						0.11			
2	J	4	370.67	370.68	PSS4B	SLOPE	II A 2	WETLAND	60	60							0.01			
2	J	4	370.68	370.71	U	N/A	I a 2	UPLAND	165		165						0.03			
2	J	4	370.71	370.77	PSS4B	FLAT - ORGANIC	II A 2	WETLAND	329	329							0.06			
2	J	4	370.77	370.78	PSS1/4B	SLOPE	II C 2, II A 3	WETLAND	31	31							0.01			
2	J	4	370.78	370.90	PSS4B	FLAT - ORGANIC	II A 2	WETLAND	640	640							0.12			
2	J	4	370.90	370.91	PSS1/4B	SLOPE	II C 2, II A 3	WETLAND	51	51							0.01			
2	J	4	370.91	370.95	PSS4/FO4B	FLAT - ORGANIC	II A 2	WETLAND	212	212							0.04			
2	J	4	370.95	370.98	U	N/A	I A 2	UPLAND	193		193						0.04			
2	J	4	370.98	371.02	PSS4/FO4B	FLAT - ORGANIC	II A 2	WETLAND	179	179							0.03			
2	J	4	371.02	371.04	U	N/A	I A 2	UPLAND	103		103						0.02			
2	J	4	371.04	371.17	U	N/A	I C 2	UPLAND	709		709						0.13			
2	J	4	371.17	371.19	U	N/A	I A 2, II C 2	UPLAND	99		99						0.02			
2	J	4	371.19	371.21	PSS4/1B	FLAT - ORGANIC	II A 2, II C 2	WETLAND	101	101							0.02			

SPREAD	SECTION	ROW MODE	FROM MP	TO MP	NWI CODE	HGM CLASS	VIERECK	DESCRIPTION	LINEAR FEET	WETLAND FEET	UPLAND FEET	DISTURBED FEET	Comments	Mode 1 - Ice Workpad (miles)	Mode 2 - Frost Pack (miles)	Mode 3 - Timber Mats	Mode 4 - Granular Workpad	Mode 5A - Grade	Mode 5B - Mountain Grade	Stream & Flood Plain Crossings
2	J	4	371.21	371.23	U	N/A	I A 2, II C 2	UPLAND	104		104						0.02			
2	J	4	371.23	371.25	PSS4/1B	FLAT - ORGANIC	II A 2, II C 2	WETLAND	92	92							0.02			
2	J	4	371.25	371.27	PSS1/4B	SLOPE	II C 2, II A 3	WETLAND	100	100							0.02			
2	J	4	371.27	371.29	PSS4/1B	FLAT - ORGANIC	II A 2, II C 2	WETLAND	103	103							0.02			
2	J	4	371.29	371.35	PSS1/4B	SLOPE	II C 2, II A 3	WETLAND	347	347							0.07			
2	J	WB-S	371.35	371.35	PSS1/4B	SLOPE	II C 2, II A 3	WETLAND	3	3										0.00
2	J	WB-S	371.35	371.36	PSS1C	RIVERINE	II B 2	WETLAND	57	57										0.01
2	J	4	371.36	371.37	PSS1C	RIVERINE	II B 2	WETLAND	46	46							0.01			
2	J	4	371.37	371.39	PSS1/4B	SLOPE	II C 2, II A 3	WETLAND	106	106							0.02			
2	J	4	371.39	371.41	PSS4B	FLAT - ORGANIC	II A 2	WETLAND	108	108							0.02			
2	J	4	371.41	371.42	PSS1/4B	SLOPE	II C 2, II A 3	WETLAND	46	46							0.01			
2	J	4	371.42	371.51	PSS4B	FLAT - ORGANIC	II A 2	WETLAND	477	477							0.09			
2	J	4	371.51	371.55	U	N/A	I B 1, I C 1	UPLAND	213		213						0.04			
2	J	5A	371.55	371.85	U	N/A	I B 1, I C 1	UPLAND	1601		1601							0.30		
2	J	5A	371.85	371.86	D	N/A	NONE	DISTURBED	48			48						0.01		
2	J	5A	371.86	372.15	U	N/A	I B 1, I C 1	UPLAND	1492		1492							0.28		
2	J	5A	372.15	372.18	PSS1/4B	FLAT - ORGANIC	II C 2, II A 2	WETLAND	157	157								0.03		
2	J	5A	372.18	372.19	PFO4/SS1B	RIVERINE	I A 2, II B 2	WETLAND	56	56								0.01		
2	J	WB-S	372.19	372.20	PFO4/SS1B	RIVERINE	I A 2, II B 2	WETLAND	60	60										0.01
2	J	5A	372.20	372.22	PFO4/SS1B	RIVERINE	I A 2, II B 2	WETLAND	110	110								0.02		
2	J	5A	372.22	372.29	PSS1/4B	FLAT - ORGANIC	II C 2, II A 2	WETLAND	378	378								0.07		
2	J	4	372.29	372.30	PSS1/4B	FLAT - ORGANIC	II C 2, II A 2	WETLAND	57	57							0.01			
2	J	4	372.30	372.58	U	N/A	I C 2, II B 2	UPLAND	1495		1495						0.28			
2	J	5A	372.58	372.82	U	N/A	I C 2, II B 2	UPLAND	1271		1271							0.24		
2	J	5A	372.82	372.88	U	N/A	II C 2, II B 2	UPLAND	282		282							0.05		
2	J	5A	372.88	372.93	U	N/A	I C 2, II B 2	UPLAND	277		277							0.05		
2	J	4	372.93	372.94	U	N/A	I C 2, II B 2	UPLAND	45		45						0.01			
2	J	4	372.94	372.95	PSS1/4B	SLOPE	II B 2, II A 3	WETLAND	81	81							0.02			
2	J	4	372.95	373.02	U	N/A	I C 2, II B 2	UPLAND	322		322						0.06			
2	J	4	373.02	373.09	PSS1/EM1B	FLAT - ORGANIC	II C 2, III A 2	WETLAND	387	387							0.07			
2	J	4	373.09	373.10	PSS1/EM1C	SLOPE	II C 2, III A 2	WETLAND	67	67							0.01			
2	J	4	373.10	373.11	PSS1/EM1B	FLAT - ORGANIC	II C 2, III A 2	WETLAND	63	63							0.01			
2	J	4	373.11	373.13	PSS1/EM1C	SLOPE	II C 2, III A 2	WETLAND	98	98							0.02			
2	J	4	373.13	373.14	PSS1/EM1B	FLAT - ORGANIC	II C 2, III A 2	WETLAND	42	42							0.01			
2	J	4	373.14	373.38	U	N/A	II C 2, II B 2	UPLAND	1245		1245						0.24			
2	J	5A	373.38	373.51	U	N/A	II C 2, II B 2	UPLAND	710		710							0.13		
2	J	5A	373.51	373.61	U	N/A	I C 2, II C 2	UPLAND	548		548							0.10		
2	J	5A	373.61	373.69	U	N/A	II C 2, III A 2	UPLAND	392		392							0.07		
2	J	5A	373.69	373.71	PSS1/EM1B	FLAT - ORGANIC	II C 2, III A 2	WETLAND	131	131								0.02		
2	J	5A	373.71	373.72	D	N/A	NONE	DISTURBED	38			38						0.01		
2	J	5A	373.72	373.77	PSS4/1B	FLAT - ORGANIC	II A 2, II C 2	WETLAND	242	242								0.05		
2	J	WB-S	373.77	373.77	PSS4/1B	FLAT - ORGANIC	II A 2, II C 2	WETLAND	25	25										0.00
2	J	WB-S	373.77	373.78	U	N/A	II B 2, I C 3	UPLAND	35		35									0.01
2	J	5A	373.78	373.79	U	N/A	II B 2, I C 3	UPLAND	56		56							0.01		
2	J	5A	373.79	373.80	PSS1/EM1B	FLAT - ORGANIC	II C 2, III A 2	WETLAND	80	80								0.02		
2	J	5A	373.80	373.82	PSS1/4B	FLAT - ORGANIC	II B 2, II A 2	WETLAND	70	70								0.01		
2	J	5A	373.82	373.90	U	N/A	I A 2, II B 2	UPLAND	465		465							0.09		
2	J	5A	373.90	374.04	U	N/A	I C 2, II B 2	UPLAND	712		712							0.13		
2	J	5A	374.04	374.48	U	N/A	II C 2, II B 2	UPLAND	2348		2348							0.44		
2	J	5A	374.48	374.53	U	N/A	I C 3, II B 2	UPLAND	223		223							0.04		
2	J	5A	374.53	374.69	U	N/A	II C 2, II B 2	UPLAND	875		875							0.17		
2	J	5A	374.69	374.92	U	N/A	I C 2	UPLAND	1228		1228							0.23		
2	J	4	374.92	374.94	U	N/A	I C 2	UPLAND	63		63						0.01			
2	J	WB-S	374.94	374.95	U	N/A	I C 2	UPLAND	60		60									0.01
2	J	4	374.95	375.00	U	N/A	I C 2	UPLAND	276		276						0.05			
2	J	4	375.00	375.02	PSS1B	FLAT - ORGANIC	II B 2, II C 2	WETLAND	94	94							0.02			
2	J	5A	375.02	375.03	PSS1B	FLAT - ORGANIC	II B 2, II C 2	WETLAND	58	58								0.01		
2	J	5A	375.03	375.18	U	N/A	II B 2, II C 2	UPLAND	797		797							0.15		
2	J	5A	375.18	375.22	U	N/A	I C 2	UPLAND	228		228							0.04		
2	J	5A	375.22	375.23	U	N/A	II C 2, II B 2	UPLAND	44		44							0.01		
2	J	5A	375.23	375.50	U	N/A	I C 2	UPLAND	1405		1405							0.27		
2	J	4	375.50	375.53	U	N/A	I C 2	UPLAND	158		158						0.03			
2	J	WB-S	375.53	375.54	U	N/A	I C 2	UPLAND	90		90									0.02
2	J	4	375.54	375.91	U	N/A	I C 2	UPLAND	1939		1939						0.37			
2	J	4	375.91	375.93	U	N/A	I C 2, II B 2	UPLAND	90		90						0.02			
2	J	4	375.93	375.95	U	N/A	I C 2	UPLAND	120		120						0.02			
2	J	4	375.95	375.99	U	N/A	I C 2, II B 2	UPLAND	181		181						0.03			
2	J	4	375.99	376.43	U	N/A	I C 2	UPLAND	2333		2333						0.44			
2	J	4	376.43	376.43	U	N/A	I C 2	UPLAND	8		8						0.00			
2	J	4	376.43	376.45	PSS1/EM1B	FLAT - ORGANIC	II B 2, III A 2	WETLAND	108	108							0.02			
2	K	4	376.45	376.45	D	N/A	NONE	DISTURBED	31			31					0.01			
2	K	4	376.45	376.58	PSS1/EM1B	FLAT - ORGANIC	II B 2, III A 2	WETLAND	680	680							0.13			

SPREAD	SECTION	ROW MODE	FROM MP	TO MP	NWI CODE	HGM CLASS	VIERECK	DESCRIPTION	LINEAR FEET	WETLAND FEET	UPLAND FEET	DISTURBED FEET	Comments	Mode 1 - Ice Workpad (miles)	Mode 2 - Frost Pack (miles)	Mode 3 - Timber Mats	Mode 4 - Granular Workpad	Mode 5A - Grade	Mode 5B - Mountain Grade	Stream & Flood Plain Crossings
2	K	WB-W	376.58	376.58	PSS1/EM1B	FLAT - ORGANIC	II B 2, III A 2	WETLAND	2	2										0.00
2	K	WB-W	376.58	376.59	PSS1C	RIVERINE	II B 1	WETLAND	42	42										0.01
2	K	WB-W	376.59	376.59	PSS1/EM1B	FLAT - ORGANIC	II B 2, III A 2	WETLAND	15	15										0.00
2	K	4	376.59	376.61	PSS1/EM1B	FLAT - ORGANIC	II B 2, III A 2	WETLAND	74	74							0.01			
2	K	4	376.61	376.76	U	N/A	I A 2, II C 2	UPLAND	788		788						0.15			
2	K	4	376.76	376.77	U	N/A	I C 2, II C 2	UPLAND	68		68						0.01			
2	K	4	376.77	376.84	U	N/A	I A 2, II C 2	UPLAND	351		351						0.07			
2	K	4	376.84	376.85	U	N/A	I C 2, II C 2	UPLAND	70		70						0.01			
2	K	4	376.85	376.97	U	N/A	II C 2, III A 1	UPLAND	620		620						0.12			
2	K	4	376.97	376.99	U	N/A	II B 2, II C 2	UPLAND	131		131						0.02			
2	K	4	376.99	377.01	PSS1B	RIVERINE	II B 2	WETLAND	87	87							0.02			
2	K	WB-W	377.01	377.02	PSS1B	RIVERINE	II B 2	WETLAND	42	42										0.01
2	K	WB-W	377.02	377.03	PSS1/EM1B	FLAT - ORGANIC	II B 2, III A 2	WETLAND	48	48										0.01
2	K	4	377.03	377.11	PSS1/EM1B	FLAT - ORGANIC	II B 2, III A 2	WETLAND	417	417							0.08			
2	K	4	377.11	377.21	U	N/A	II C 2, II B 2	UPLAND	561		561						0.11			
2	K	4	377.21	377.25	U	N/A	I A 3, II B 2	UPLAND	206		206						0.04			
2	K	4	377.25	377.59	U	N/A	II C 2, II B 2	UPLAND	1815		1815						0.34			
2	K	WB-W	377.59	377.61	U	N/A	II C 2, II B 2	UPLAND	60		60									0.01
2	K	4	377.61	377.80	U	N/A	II C 2, II B 2	UPLAND	1002		1002						0.19			
2	K	4	377.80	377.80	D	N/A	NONE	DISTURBED	35			35					0.01			
2	K	4	377.80	377.88	U	N/A	II B 2	UPLAND	386		386						0.07			
2	K	4	377.88	377.91	U	N/A	II B 2, II C 2	UPLAND	159		159						0.03			
2	K	4	377.91	377.93	U	N/A	II B 2, III A 2	UPLAND	107		107						0.02			
2	K	4	377.93	378.00	U	N/A	II B 2, II C 2	UPLAND	378		378						0.07			
2	K	4	378.00	378.05	U	N/A	I A 3, II B 2	UPLAND	250		250						0.05			
2	K	4	378.05	378.12	U	N/A	II C 2, II B 2	UPLAND	407		407						0.08			
2	K	4	378.12	378.12	U	N/A	I A 3, II B 2	UPLAND	5		5						0.00			
2	K	WB-W	378.12	378.13	U	N/A	I A 3, II B 2	UPLAND	54		54									0.01
2	K	WB-W	378.13	378.13	U	N/A	II B 2, II C 2	UPLAND	6		6									0.00
2	K	4	378.13	378.90	U	N/A	II B 2, II C 2	UPLAND	4025		4025						0.76			
2	K	4	378.90	379.05	U	N/A	I A 3, II B 2	UPLAND	798		798						0.15			
2	K	4	379.05	379.08	U	N/A	II C 2, III A 1	UPLAND	151		151						0.03			
2	K	4	379.08	379.08	U	N/A	I A 3, II B 2	UPLAND	35		35						0.01			
2	K	4	379.08	379.12	U	N/A	II C 2, III A 1	UPLAND	172		172						0.03			
2	K	4	379.12	379.51	U	N/A	I A 3, II B 2	UPLAND	2105		2105						0.40			
2	K	4	379.51	379.52	D	N/A	NONE	DISTURBED	43			43					0.01			
2	K	4	379.52	379.52	U	N/A	I A 3, II B 2	UPLAND	12		12						0.00			
2	K	4	379.52	379.68	U	N/A	I A 3, II B 2	UPLAND	811		811						0.15			
2	K	4	379.68	379.71	U	N/A	II C 2, II B 2	UPLAND	183		183						0.03			
2	K	4	379.71	379.73	U	N/A	I A 3, II B 2	UPLAND	72		72						0.01			
2	K	4	379.73	379.75	U	N/A	II C 2, II B 2	UPLAND	142		142						0.03			
2	K	4	379.75	379.75	U	N/A	I A 3, II B 2	UPLAND	6		6						0.00			
2	K	4	379.75	379.79	U	N/A	II C 2, II B 2	UPLAND	186		186						0.04			
2	K	4	379.79	379.85	U	N/A	I A 3, II B 2	UPLAND	319		319						0.06			
2	K	4	379.85	379.85	U	N/A	II C 2, II B 2	UPLAND	17		17						0.00			
2	K	4	379.85	379.95	U	N/A	I A 3, II B 2	UPLAND	526		526						0.10			
2	K	4	379.95	379.98	U	N/A	II C 2, II B 2	UPLAND	142		142						0.03			
2	K	4	379.98	380.02	U	N/A	I A 3, II B 2	UPLAND	233		233						0.04			
2	K	4	380.02	380.04	U	N/A	II C 2, II B 2	UPLAND	104		104						0.02			
2	K	4	380.04	380.08	U	N/A	I A 3, II B 2	UPLAND	208		208						0.04			
2	K	WB-W	380.08	380.10	U	N/A	I A 3, II B 2	UPLAND	90		90									0.02
2	K	4	380.10	380.17	U	N/A	I A 3, II B 2	UPLAND	378		378						0.07			
2	K	4	380.17	380.19	U	N/A	II C 2, II B 2	UPLAND	84		84						0.02			
2	K	4	380.19	380.19	PSS1/EM1B	RIVERINE	II B 2, III A 2	WETLAND	18	18							0.00			
2	K	4	380.19	380.24	U	N/A	II C 2, II B 2	UPLAND	240		240						0.05			
2	K	4	380.24	380.24	PSS1/EM1B	RIVERINE	II B 2, III A 2	WETLAND	36	36							0.01			
2	K	4	380.24	380.36	U	N/A	II C 2, II B 2	UPLAND	622		622						0.12			
2	K	WB-W	380.36	380.36	U	N/A	II C 2, II B 2	UPLAND	14		14									0.00
2	K	WB-W	380.36	380.37	PSS1C	RIVERINE	II B 2, I A 3	WETLAND	37	37										0.01
2	K	WB-W	380.37	380.37	U	N/A	II C 2, II B 2	UPLAND	10		10									0.00
2	K	4	380.37	380.38	U	N/A	II C 2, II B 2	UPLAND	15		15						0.00			
2	K	4	380.38	380.38	U	N/A	II B 2, II C 2	UPLAND	1		1						0.00			
2	K	4	380.38	380.44	U	N/A	II C 2, II B 2	UPLAND	343		343						0.07			
2	K	WB-W	380.44	380.45	U	N/A	II C 2, II B 2	UPLAND	22		22									0.00
2	K	WB-W	380.45	380.45	PSS1C	RIVERINE	II B 2, I A 3	WETLAND	34	34										0.01
2	K	WB-W	380.45	380.46	U	N/A	II C 2, II B 2	UPLAND	34		34									0.01
2	K	4	380.46	380.46	U	N/A	II C 2, II B 2	UPLAND	3		3						0.00			
2	K	4	380.46	380.46	PSS1C	RIVERINE	II B 2, I A 3	WETLAND	28	28							0.01			
2	K	4	380.46	380.50	U	N/A	II C 2, II B 2	UPLAND	191		191						0.04			
2	K	4	380.50	380.51	D	N/A	NONE	DISTURBED	37			37					0.01			
2	K	4	380.51	380.56	U	N/A	II C 2, II B 2	UPLAND	254		254						0.05			
2	K	4	380.56	380.56	U	N/A	II B 2, III A 2	UPLAND	27		27						0.01			

SPREAD	SECTION	ROW MODE	FROM MP	TO MP	NWI CODE	HGM CLASS	VIERECK	DESCRIPTION	LINEAR FEET	WETLAND FEET	UPLAND FEET	DISTURBED FEET	Comments	Mode 1 - Ice Workpad (miles)	Mode 2 - Frost Pack (miles)	Mode 3 - Timber Mats	Mode 4 - Granular Workpad	Mode 5A - Grade	Mode 5B - Mountain Grade	Stream & Flood Plain Crossings
2	K	WB-W	380.56	380.57	U	N/A	II B 2, III A 2	UPLAND	46		46									0.01
2	K	WB-W	380.57	380.57	U	N/A	II B 2, II C 2	UPLAND	13		13									0.00
2	K	4	380.57	380.94	U	N/A	II B 2, II C 2	UPLAND	1962		1962						0.37			
2	K	4	380.94	381.01	PSS1/EM1B	FLAT - ORGANIC	II C 2, III A 2	WETLAND	334	334							0.06			
2	K	4	381.01	381.11	PSS1/EM1B	FLAT - ORGANIC	II C 2, III A 2	WETLAND	567	567							0.11			
2	K	4	381.11	381.14	PEM1/SS1B	FLAT - ORGANIC	III A 2, II C 2	WETLAND	153	153							0.03			
2	K	4	381.14	381.20	PSS1/EM1B	FLAT - ORGANIC	II C 2, III A 2	WETLAND	283	283							0.05			
2	K	4	381.20	381.21	PEM1/SS1B	FLAT - ORGANIC	III A 2, II C 2	WETLAND	92	92							0.02			
2	K	4	381.21	381.29	PSS1/EM1B	FLAT - ORGANIC	II C 2, III A 2	WETLAND	384	384							0.07			
2	K	4	381.29	381.30	PSS3/1B	FLAT - ORGANIC	II C 2, II B 2	WETLAND	46	46							0.01			
2	K	4	381.30	381.33	PSS1/EM1B	FLAT - ORGANIC	II C 2, III A 2	WETLAND	198	198							0.04			
2	K	4	381.33	381.37	PSS3/1B	FLAT - ORGANIC	II C 2, II B 2	WETLAND	198	198							0.04			
2	K	4	381.37	381.42	PSS1/EM1B	FLAT - ORGANIC	II C 2, III A 2	WETLAND	247	247							0.05			
2	K	4	381.42	381.43	PSS1/EM1E	DEPRESSIONAL	II C 2, III A 3	WETLAND	51	51							0.01			
2	K	4	381.43	381.47	PSS1/EM1B	FLAT - ORGANIC	II C 2, III A 2	WETLAND	224	224							0.04			
2	K	4	381.47	381.52	PSS1/4B	FLAT - ORGANIC	I A 3, II C 2	WETLAND	272	272							0.05			
2	K	4	381.52	381.53	PEM1E	DEPRESSIONAL	III A 3	WETLAND	48	48							0.01			
2	K	4	381.53	381.55	PSS1/4B	FLAT - ORGANIC	I A 3, II C 2	WETLAND	108	108							0.02			
2	K	4	381.55	381.57	U	N/A	I A 2, II B 2	UPLAND	90		90						0.02			
2	K	4	381.57	381.57	PSS1C	RIVERINE	II B 1	WETLAND	24	24							0.00			
2	K	4	381.57	381.57	PSS1/FO4C	RIVERINE	I A 3, II B 2	WETLAND	1	1							0.00			
2	K	WB-W	381.57	381.59	PSS1/FO4C	RIVERINE	I A 3, II B 2	WETLAND	83	83										0.02
2	K	WB-W	381.59	381.60	PSS1C	RIVERINE	II B 1	WETLAND	85	85										0.02
2	K	WB-W	381.60	381.74	U	N/A	I C 2, II B 2	UPLAND	704		704									0.13
2	K	WB-W	381.74	381.74	R3USC	RIVERINE	NONE	WETLAND	40	40										0.01
2	K	WB-W	381.74	381.76	R3UBH	RIVERINE	NONE	WETLAND	61	61										0.01
2	K	WB-W	381.76	381.76	R3USC	RIVERINE	NONE	WETLAND	38	38										0.01
2	K	WB-W	381.76	381.87	U	N/A	I C 2, II B 2	UPLAND	540		540									0.10
2	K	WB-W	381.87	381.87	PEM1F	RIVERINE	III A 3	WETLAND	18	18										0.00
2	K	WB-W	381.87	381.87	U	N/A	I C 2, II B 2	UPLAND	9		9									0.00
2	K	WB-W	381.87	381.89	PSS1/FO4B	FLAT - ORGANIC	I C 1, II B 2	WETLAND	126	126										0.02
2	K	WB-W	381.89	381.91	U	N/A	I C 2, II B 2	UPLAND	92		92									0.02
2	K	WB-W	381.91	381.93	PSS1/FO4B	FLAT - ORGANIC	I C 1, II B 2	WETLAND	105	105										0.02
2	K	WB-W	381.93	381.95	PSS3B	FLAT - ORGANIC	II C 2	WETLAND	80	80										0.02
2	K	4	381.95	381.95	PSS3B	FLAT - ORGANIC	II C 2	WETLAND	18	18							0.00			
2	K	4	381.95	381.96	PSS1/FO4B	FLAT - ORGANIC	I C 1, II B 2	WETLAND	35	35							0.01			
2	K	4	381.96	382.00	PEM1E	DEPRESSIONAL	III A 3	WETLAND	255	255							0.05			
2	K	4	382.00	382.02	PSS1B	FLAT - ORGANIC	II B 2, II C 2	WETLAND	106	106							0.02			
2	K	4	382.02	382.13	PEM1B	FLAT - ORGANIC	III A 2	WETLAND	530	530							0.10			
2	K	4	382.13	382.16	PSS1B	FLAT - ORGANIC	II B 2, II C 2	WETLAND	174	174							0.03			
2	K	4	382.16	382.17	PEM1B	FLAT - ORGANIC	III A 2	WETLAND	76	76							0.01			
2	K	4	382.17	382.20	PSS1B	FLAT - ORGANIC	II B 2, II C 2	WETLAND	125	125							0.02			
2	K	4	382.20	382.20	PEM1B	FLAT - ORGANIC	III A 2	WETLAND	27	27							0.01			
2	K	4	382.20	382.23	PSS1B	FLAT - ORGANIC	II B 2, II C 2	WETLAND	143	143							0.03			
2	K	4	382.23	382.29	PEM1B	FLAT - ORGANIC	III A 2	WETLAND	311	311							0.06			
2	K	4	382.29	382.30	PSS1B	FLAT - ORGANIC	II B 2, II C 2	WETLAND	61	61							0.01			
2	K	4	382.30	382.31	D	N/A	NONE	DISTURBED	41			41					0.01			
2	K	4	382.31	382.31	PSS1/EM1B	FLAT - ORGANIC	II C 2, III A 2	WETLAND	4	4							0.00			
2	K	4	382.31	382.33	U	N/A	II B 1	UPLAND	100		100						0.02			
2	L	4	382.33	382.39	U	N/A	II B 1	UPLAND	342		342						0.06			
2	L	4	382.39	382.39	U	N/A	II C 2, II B 2	UPLAND	18		18						0.00			
2	L	4	382.39	382.40	U	N/A	II B 2, I A 3	UPLAND	23		23						0.00			
2	L	4	382.40	382.40	U	N/A	II B 1	UPLAND	1		1						0.00			
2	L	4	382.40	382.43	U	N/A	II B 2, I A 3	UPLAND	149		149						0.03			
2	L	4	382.43	382.48	U	N/A	II C 2, I C 3	UPLAND	272		272						0.05			
2	L	4	382.48	382.49	U	N/A	II B 2, I A 3	UPLAND	50		50						0.01			
2	L	4	382.49	382.58	U	N/A	II C 2, II B 2	UPLAND	468		468						0.09			
2	L	4	382.58	382.62	U	N/A	II B 2, I A 3	UPLAND	205		205						0.04			
2	L	4	382.62	382.64	U	N/A	II C 2, II B 2	UPLAND	128		128						0.02			
2	L	4	382.64	382.68	U	N/A	II B 2, I A 3	UPLAND	199		199						0.04			
2	L	4	382.68	382.86	U	N/A	II C 2, II B 2	UPLAND	945		945						0.18			
2	L	4	382.86	382.94	U	N/A	II B 2, I A 3	UPLAND	450		450						0.09			
2	L	4	382.94	383.03	U	N/A	II C 2, II B 2	UPLAND	477		477						0.09			
2	L	4	383.03	383.19	U	N/A	II C 2, I A 3	UPLAND	850		850						0.16			
2	L	4	383.19	383.57	U	N/A	II C 2, II B 2	UPLAND	2013		2013						0.38			
2	L	4	383.57	383.62	U	N/A	II B 2, I A 3	UPLAND	228		228						0.04			
2	L	4	383.62	383.95	U	N/A	II C 2, II B 2	UPLAND	1768		1768						0.33			
2	L	5A	383.95	384.76	U	N/A	II C 2, II B 2	UPLAND	4277		4277							0.81		
2	L	5A	384.76	384.78	D	N/A	NONE	DISTURBED	102			102						0.02		
2	L	5A	384.78	385.29	U	N/A	I C 2, II B 2	UPLAND	2704		2704							0.51		
2	L	4	385.29	385.29	U	N/A	I C 2, II B 2	UPLAND	2		2						0.00			
2	L	4	385.29	385.44	U	N/A	I A 2, II C 2	UPLAND	767		767						0.15			

SPREAD	SECTION	ROW MODE	FROM MP	TO MP	NWI CODE	HGM CLASS	VIERECK	DESCRIPTION	LINEAR FEET	WETLAND FEET	UPLAND FEET	DISTURBED FEET	Comments	Mode 1 - Ice Workpad (miles)	Mode 2 - Frost Pack (miles)	Mode 3 - Timber Mats	Mode 4 - Granular Workpad	Mode 5A - Grade	Mode 5B - Mountain Grade	Stream & Flood Plain Crossings
2	L	4	385.44	385.50	U	N/A	I C 2, II B 2	UPLAND	328		328						0.06			
2	L	4	385.50	385.57	U	N/A	I A 2, II C 2	UPLAND	373		373						0.07			
2	L	4	385.57	385.75	PSS1B	FLAT - ORGANIC	II C 2, I C 3	WETLAND	923	923							0.17			
2	L	4	385.75	385.75	U	N/A	I A 2, II B 2	UPLAND	32		32						0.01			
2	L	WB-S	385.75	385.76	U	N/A	I A 2, II B 2	UPLAND	14		14									0.00
2	L	WB-S	385.76	385.76	R3UBH	RIVERINE	NONE	WETLAND	39	39										0.01
2	L	WB-S	385.76	385.78	U	N/A	I A 2, II B 2	UPLAND	67		67									0.01
2	L	4	385.78	385.78	U	N/A	I A 2, II B 2	UPLAND	39		39						0.01			
2	L	4	385.78	385.96	PSS1/EM1B	FLAT - ORGANIC	II C 2, III A 2	WETLAND	942	942							0.18			
2	L	4	385.96	386.01	PSS1/FO4B	FLAT - ORGANIC	II C 2, I A 3	WETLAND	258	258							0.05			
2	L	4	386.01	386.02	PSS1C	SLOPE	II C 2, I A 3	WETLAND	74	74							0.01			
2	L	4	386.02	386.05	PSS1/FO4B	FLAT - ORGANIC	II C 2, I A 3	WETLAND	112	112							0.02			
2	L	4	386.05	386.07	PSS1C	SLOPE	II C 2, I A 3	WETLAND	137	137							0.03			
2	L	4	386.07	386.18	PSS1/FO4B	FLAT - ORGANIC	II C 2, I A 3	WETLAND	578	578							0.11			
2	L	4	386.18	386.19	U	N/A	I A 3, II C 2	UPLAND	54		54						0.01			
2	L	4	386.19	386.21	PSS1/FO4B	SLOPE	II C 2, I A 3	WETLAND	106	106							0.02			
2	L	4	386.21	386.23	U	N/A	I A 3, II C 2	UPLAND	88		88						0.02			
2	L	4	386.23	386.25	PSS1/FO4B	FLAT - ORGANIC	II C 2, I A 3	WETLAND	104	104							0.02			
2	L	4	386.25	386.26	PSS1/FO4B	SLOPE	II C 2, I A 3	WETLAND	62	62							0.01			
2	L	4	386.26	386.31	PSS1/4B	FLAT - MINERAL	II C 2, II A 3	WETLAND	275	275							0.05			
2	L	4	386.31	386.33	U	N/A	I A 3, II C 2	UPLAND	118		118						0.02			
2	L	4	386.33	386.35	PSS1/4B	FLAT - MINERAL	II C 2, II A 3	WETLAND	107	107							0.02			
2	L	4	386.35	386.43	PSS1/EM1B	FLAT - MINERAL	II C 2, III A 2	WETLAND	405	405							0.08			
2	L	4	386.43	386.47	PSS1/4B	FLAT - MINERAL	II C 2, II A 3	WETLAND	189	189							0.04			
2	L	4	386.47	386.58	PSS1/EM1B	FLAT - MINERAL	II C 2, III A 2	WETLAND	610	610							0.12			
2	L	4	386.58	386.59	PSS1C	SLOPE	II C 2, I A 3	WETLAND	33	33							0.01			
2	L	WB-S	386.59	386.60	PSS1C	SLOPE	II C 2, I A 3	WETLAND	50	50										0.01
2	L	WB-S	386.60	386.61	PSS1/FO4B	FLAT - ORGANIC	II C 2, I A 3	WETLAND	40	40										0.01
2	L	4	386.61	386.64	PSS1/FO4B	FLAT - ORGANIC	II C 2, I A 3	WETLAND	178	178							0.03			
2	L	4	386.64	386.65	PSS1C	SLOPE	II C 2, I A 3	WETLAND	49	49							0.01			
2	L	4	386.65	386.67	PSS1/FO4B	FLAT - ORGANIC	II C 2, I A 3	WETLAND	135	135							0.03			
2	L	4	386.67	386.68	PSS1C	SLOPE	II C 2, I A 3	WETLAND	16	16							0.00			
2	L	4	386.68	386.69	PSS1/FO4B	FLAT - ORGANIC	II C 2, I A 3	WETLAND	43	43							0.01			
2	L	4	386.69	386.69	PSS1C	SLOPE	II C 2, I A 3	WETLAND	22	22							0.00			
2	L	4	386.69	386.71	PSS1B	FLAT - ORGANIC	II C 2, II B 2	WETLAND	128	128							0.02			
2	L	4	386.71	386.76	PSS1/EM1B	FLAT - ORGANIC	II C 2, III A 2	WETLAND	258	258							0.05			
2	L	4	386.76	386.88	PSS1B	FLAT - ORGANIC	II C 2, II B 2	WETLAND	607	607							0.11			
2	L	4	386.88	386.88	PSS1/EM1B	FLAT - ORGANIC	II C 2, III A 2	WETLAND	14	14							0.00			
2	L	4	386.88	386.88	PSS1B	FLAT - ORGANIC	II C 2, II B 2	WETLAND	20	20							0.00			
2	L	WB-S	386.88	386.90	PSS1B	FLAT - ORGANIC	II C 2, II B 2	WETLAND	90	90										0.02
2	L	4	386.90	387.71	PSS1B	FLAT - ORGANIC	II C 2, II B 2	WETLAND	4254	4254							0.81			
2	L	4	387.71	387.73	PSS1/FO4B	FLAT - ORGANIC	II C 2, I A 3	WETLAND	112	112							0.02			
2	L	4	387.73	387.75	PSS1B	FLAT - ORGANIC	II C 2, II B 2	WETLAND	122	122							0.02			
2	L	4	387.75	387.76	PSS1/FO4B	FLAT - ORGANIC	II C 2, I A 3	WETLAND	40	40							0.01			
2	L	4	387.76	387.80	U	N/A	I A 2, II C 2	UPLAND	219		219						0.04			
2	L	4	387.80	387.85	PSS1/FO4B	FLAT - ORGANIC	II C 2, I A 3	WETLAND	253	253							0.05			
2	L	4	387.85	387.89	PSS1/EM1B	FLAT - ORGANIC	II C 2, III A 2	WETLAND	233	233							0.04			
2	L	4	387.89	387.90	U	N/A	I A 3, I C 3	UPLAND	16		16						0.00			
2	L	WB-S	387.90	387.90	U	N/A	I A 3, I C 3	UPLAND	24		24									0.00
2	L	WB-S	387.90	387.90	R3UBH	RIVERINE	NONE	WETLAND	27	27										0.01
2	L	WB-S	387.90	387.91	U	N/A	I A 3, I C 3	UPLAND	37		37									0.01
2	L	WB-S	387.91	387.91	PSS1/EM1B	FLAT - ORGANIC	II C 2, III A 2	WETLAND	2	2										0.00
2	L	4	387.91	387.94	PSS1/EM1B	FLAT - ORGANIC	II C 2, III A 2	WETLAND	120	120							0.02			
2	L	4	387.94	387.96	U	N/A	II B 2, II C 2	UPLAND	138		138						0.03			
2	L	5A	387.96	388.86	U	N/A	II B 2, II C 2	UPLAND	4730		4730							0.90		
2	L	5A	388.86	388.87	D	N/A	NONE	DISTURBED	57			57						0.01		
2	L	5A	388.87	388.92	U	N/A	II B 2, I C 3	UPLAND	295		295							0.06		
2	L	4	388.92	389.18	U	N/A	II B 2, I C 3	UPLAND	1372		1372						0.26			
2	L	4	389.18	389.26	U	N/A	I C 2	UPLAND	421		421						0.08			
2	L	4	389.26	389.89	U	N/A	II B 2, I C 3	UPLAND	3297		3297						0.62			
2	L	4	389.89	389.91	PSS1/EM1B	FLAT - ORGANIC	II C 2, III A 2	WETLAND	122	122							0.02			
2	L	4	389.91	390.17	U	N/A	II B 2, II C 2	UPLAND	1372		1372						0.26			
2	L	4	390.17	390.19	PSS1B	SLOPE	II C 2	WETLAND	80	80							0.02			
2	L	4	390.19	390.24	U	N/A	II B 2, II C 2	UPLAND	275		275						0.05			
2	L	4	390.24	390.28	PSS1/EM1B	SLOPE	II C 2, III A 2	WETLAND	202	202							0.04			
2	L	4	390.28	390.38	U	N/A	II B 2, II C 2	UPLAND	524		524						0.10			
2	L	4	390.38	390.40	PSS1/EM1B	FLAT - ORGANIC	II C 2, III A 2	WETLAND	136	136							0.03			
2	L	4	390.40	390.61	U	N/A	II B 2, II C 2	UPLAND	1095		1095						0.21			
2	L	4	390.61	390.75	PSS1/EM1B	FLAT - ORGANIC	II C 2, III A 2	WETLAND	742	742							0.14			
2	L	4	390.75	390.85	U	N/A	II B 2, II C 2	UPLAND	513		513						0.10			
2	L	4	390.85	390.90	PSS1/EM1B	FLAT - ORGANIC	II C 2, III A 2	WETLAND	293	293							0.06			
2	L	4	390.90	390.96	U	N/A	II B 2, II C 2	UPLAND	298		298						0.06			

SPREAD	SECTION	ROW MODE	FROM MP	TO MP	NWI CODE	HGM CLASS	VIERECK	DESCRIPTION	LINEAR FEET	WETLAND FEET	UPLAND FEET	DISTURBED FEET	Comments	Mode 1 - Ice Workpad (miles)	Mode 2 - Frost Pack (miles)	Mode 3 - Timber Mats	Mode 4 - Granular Workpad	Mode 5A - Grade	Mode 5B - Mountain Grade	Stream & Flood Plain Crossings
2	L	4	390.96	390.99	PSS1/EM1B	FLAT - ORGANIC	II C 2, III A 2	WETLAND	162	162							0.03			
2	L	4	390.99	391.07	U	N/A	II B 2, II C 2	UPLAND	431		431						0.08			
2	L	4	391.07	391.08	PSS1/EM1B	FLAT - ORGANIC	II C 2, III A 2	WETLAND	67	67							0.01			
2	L	4	391.08	391.30	U	N/A	II B 2, II C 2	UPLAND	1131		1131						0.21			
2	L	4	391.30	391.31	PFO4/SS1C	RIVERINE	I A 3, II C 2	WETLAND	67	67							0.01			
2	L	WB-S	391.31	391.32	PFO4/SS1C	RIVERINE	I A 3, II C 2	WETLAND	60	60										0.01
2	L	4	391.32	391.33	PFO4/SS1C	RIVERINE	I A 3, II C 2	WETLAND	32	32							0.01			
2	L	4	391.33	391.46	U	N/A	II B 2, II C 2	UPLAND	685		685						0.13			
2	L	4	391.46	391.46	PSS1C	SLOPE	II B 2	WETLAND	21	21							0.00			
2	L	4	391.46	391.49	U	N/A	II B 2, II C 2	UPLAND	154		154						0.03			
2	L	4	391.49	391.50	PSS1C	SLOPE	II B 2	WETLAND	55	55							0.01			
2	L	4	391.50	391.54	U	N/A	II B 2, II C 2	UPLAND	223		223						0.04			
2	L	4	391.54	391.55	PSS1C	SLOPE	II B 2	WETLAND	14	14							0.00			
2	L	4	391.55	392.02	U	N/A	II B 2, II C 2	UPLAND	2482		2482						0.47			
2	L	4	392.02	392.06	U	N/A	I C 2	UPLAND	212		212						0.04			
2	L	4	392.06	392.25	U	N/A	II B 2, II C 2	UPLAND	1023		1023						0.19			
2	L	4	392.25	392.29	U	N/A	I C 2	UPLAND	200		200						0.04			
2	L	4	392.29	392.29	U	N/A	II B 2, II C 2	UPLAND	17		17						0.00			
2	L	4	392.29	392.29	U	N/A	I C 2	UPLAND	15		15						0.00			
2	L	4	392.29	392.36	U	N/A	I A 3, II B 2	UPLAND	374		374						0.07			
2	L	4	392.36	392.57	U	N/A	I C 2	UPLAND	1078		1078						0.20			
2	L	4	392.57	392.65	U	N/A	I A 2	UPLAND	447		447						0.08			
2	L	4	392.65	392.88	U	N/A	I C 2	UPLAND	1184		1184						0.22			
2	L	4	392.88	392.94	U	N/A	I A 2	UPLAND	306		306						0.06			
2	L	4	392.94	393.87	U	N/A	I C 2	UPLAND	4940		4940						0.94			
2	L	4	393.87	393.90	PSS4B	FLAT - ORGANIC	II A 2	WETLAND	162	162							0.03			
2	L	4	393.90	393.93	U	N/A	I C 2	UPLAND	127		127						0.02			
2	L	5A	393.93	393.93	U	N/A	I C 2	UPLAND	28		28							0.01		
2	L	5A	393.93	393.96	PSS4B	FLAT - ORGANIC	II A 2	WETLAND	147	147								0.03		
2	L	5A	393.96	393.97	U	N/A	I C 2	UPLAND	50		50							0.01		
2	L	5A	393.97	393.97	D	N/A	NONE	DISTURBED	29			29						0.01		
2	L	5A	393.97	394.03	U	N/A	I C 2, II C 2	UPLAND	290		290							0.05		
2	L	5A	394.03	394.12	U	N/A	I C 2, I B 2	UPLAND	505		505							0.10		
2	L	5A	394.12	394.19	U	N/A	I A 3	UPLAND	345		345							0.07		
2	L	5A	394.19	394.36	U	N/A	I C 2, I B 2	UPLAND	889		889							0.17		
2	L	5A	394.36	394.39	U	N/A	I A 2	UPLAND	191		191							0.04		
2	L	5A	394.39	394.40	U	N/A	I C 2, I B 2	UPLAND	55		55							0.01		
2	L	5A	394.40	394.45	U	N/A	I A 2	UPLAND	265		265							0.05		
2	L	5A	394.45	394.46	U	N/A	I C 2, I B 2	UPLAND	43		43							0.01		
2	L	5A	394.46	394.48	U	N/A	I A 2	UPLAND	101		101							0.02		
2	L	5A	394.48	394.49	U	N/A	I C 2, I B 2	UPLAND	50		50							0.01		
2	L	5A	394.49	394.50	U	N/A	I A 2	UPLAND	38		38							0.01		
2	L	5A	394.50	394.82	U	N/A	I C 2, I B 2	UPLAND	1716		1716							0.32		
2	L	5A	394.82	394.92	U	N/A	I A 2, II C 2	UPLAND	484		484							0.09		
2	L	5A	394.92	394.92	PSS1/FO4B	SLOPE	I A 3, II C 2	WETLAND	49	49								0.01		
2	L	5A	394.92	394.94	U	N/A	I A 2, II C 2	UPLAND	80		80							0.02		
2	L	4	394.94	394.95	U	N/A	I A 2, II C 2	UPLAND	36		36						0.01			
2	L	4	394.95	395.01	PSS1/FO4B	SLOPE	I A 3, II C 2	WETLAND	323	323							0.06			
2	L	4	395.01	395.14	U	N/A	I A 2, II C 2	UPLAND	722		722						0.14			
2	L	4	395.14	395.16	PSS1/FO4B	SLOPE	I A 3, II C 2	WETLAND	72	72							0.01			
2	L	4	395.16	395.20	U	N/A	I A 2, II C 2	UPLAND	207		207						0.04			
2	L	4	395.20	395.20	PSS1/FO4B	SLOPE	I A 3, II C 2	WETLAND	26	26							0.00			
2	L	4	395.20	395.33	U	N/A	I A 2, II C 2	UPLAND	682		682						0.13			
2	L	4	395.33	395.35	D	N/A	NONE	DISTURBED	74			74					0.01			
2	L	4	395.35	395.41	U	N/A	I A 2, II C 2	UPLAND	330		330						0.06			
2	L	4	395.41	395.41	PSS1/4C	SLOPE	II A 3, II C 2	WETLAND	35	35							0.01			
2	L	4	395.41	395.43	PSS4B	FLAT - ORGANIC	II A 2	WETLAND	67	67							0.01			
2	L	4	395.43	395.43	U	N/A	I A 2, II C 2	UPLAND	21		21						0.00			
2	L	4	395.43	395.45	PSS4B	FLAT - ORGANIC	II A 2	WETLAND	84	84							0.02			
2	L	4	395.45	395.47	U	N/A	I A 2, II C 2	UPLAND	113		113						0.02			
2	L	4	395.47	395.49	PSS4B	FLAT - ORGANIC	II A 2	WETLAND	108	108							0.02			
2	L	4	395.49	395.53	U	N/A	I A 2, II C 2	UPLAND	195		195						0.04			
2	L	4	395.53	395.53	PSS4B	FLAT - ORGANIC	II A 2	WETLAND	42	42							0.01			
2	L	4	395.53	395.54	U	N/A	I A 2, II C 2	UPLAND	39		39						0.01			
2	L	4	395.54	395.55	PSS4B	FLAT - ORGANIC	II A 2	WETLAND	45	45							0.01			
2	L	4	395.55	395.56	U	N/A	I A 2, II C 2	UPLAND	62		62						0.01			
2	L	4	395.56	395.57	PSS4B	FLAT - ORGANIC	II A 2	WETLAND	52	52							0.01			
2	L	4	395.57	395.60	U	N/A	I A 2, II C 2	UPLAND	131		131						0.02			
2	L	4	395.60	395.62	PSS4/EM1B	FLAT - ORGANIC	II A 3, III A 2	WETLAND	108	108							0.02			
2	L	4	395.62	395.63	PSS1/EM1B	FLAT - ORGANIC	II C 2, III A 2	WETLAND	84	84							0.02			
2	L	4	395.63	395.65	PSS4B	FLAT - ORGANIC	II A 2	WETLAND	66	66							0.01			
2	L	4	395.65	395.65	PSS1/EM1B	FLAT - ORGANIC	II C 2, III A 2	WETLAND	23	23							0.00			

SPREAD	SECTION	ROW MODE	FROM MP	TO MP	NWI CODE	HGM CLASS	VIERECK	DESCRIPTION	LINEAR FEET	WETLAND FEET	UPLAND FEET	DISTURBED FEET	Comments	Mode 1 - Ice Workpad (miles)	Mode 2 - Frost Pack (miles)	Mode 3 - Timber Mats	Mode 4 - Granular Workpad	Mode 5A - Grade	Mode 5B - Mountain Grade	Stream & Flood Plain Crossings
2	L	4	395.65	395.65	PSS4/EM1B	SLOPE	II A 3, III A 2	WETLAND	12	12							0.00			
2	L	4	395.65	395.68	PSS1/4B	FLAT - ORGANIC	II C 2, II A 3	WETLAND	167	167							0.03			
2	L	4	395.68	395.69	U	N/A	I B 2, II B 2	UPLAND	35		35						0.01			
2	L	WB-S	395.69	395.69	U	N/A	I B 2, II B 2	UPLAND	7		7									0.00
2	L	WB-S	395.69	395.70	R3UBH	RIVERINE	NONE	WETLAND	21	21										0.00
2	L	WB-S	395.70	395.71	U	N/A	I B 2, II B 2	UPLAND	62		62									0.01
2	L	4	395.71	395.71	U	N/A	I B 2, II B 2	UPLAND	18		18						0.00			
2	L	4	395.71	395.74	PSS1/4B	FLAT - ORGANIC	II C 2, II A 3	WETLAND	165	165							0.03			
2	L	4	395.74	395.76	U	N/A	I A 2, II B 2	UPLAND	95		95						0.02			
2	L	4	395.76	395.77	PSS1/4B	FLAT - ORGANIC	II C 2, II A 3	WETLAND	46	46							0.01			
2	L	4	395.77	395.77	U	N/A	I A 2, II B 2	UPLAND	11		11						0.00			
2	L	5A	395.77	395.89	U	N/A	I A 2, II B 2	UPLAND	634		634							0.12		
2	L	4	395.89	395.89	U	N/A	I A 2, II B 2	UPLAND	4		4						0.00			
2	L	4	395.89	396.20	PSS4/1B	FLAT - ORGANIC	II A 2, II C 2	WETLAND	1651	1651							0.31			
2	L	4	396.20	396.25	U	N/A	I A 2	UPLAND	225		225						0.04			
2	L	5A	396.25	396.83	U	N/A	I A 2	UPLAND	3091		3091							0.59		
2	L	5A	396.83	396.85	U	N/A	I C 2, II B 2	UPLAND	104		104							0.02		
2	L	4	396.85	397.14	U	N/A	I C 2, II B 2	UPLAND	1508		1508						0.29			
2	L	4	397.14	397.18	PSS1B	FLAT - ORGANIC	II C 2	WETLAND	219	219							0.04			
2	L	4	397.18	397.21	U	N/A	I C 2, II B 2	UPLAND	148		148						0.03			
2	L	4	397.21	397.29	PSS1B	FLAT - ORGANIC	II C 2	WETLAND	446	446							0.08			
2	L	4	397.29	397.32	PSS1/EM1B	FLAT - ORGANIC	II C 2, III A 2	WETLAND	140	140							0.03			
2	L	4	397.32	397.34	PSS1B	FLAT - ORGANIC	II C 2	WETLAND	103	103							0.02			
2	L	4	397.34	397.41	PSS1/EM1B	FLAT - ORGANIC	II C 2, III A 2	WETLAND	374	374							0.07			
2	L	4	397.41	397.45	PSS1B	FLAT - ORGANIC	II C 2	WETLAND	230	230							0.04			
2	L	4	397.45	397.48	U	N/A	II B 2, II C 2	UPLAND	122		122						0.02			
2	L	5A	397.48	397.54	U	N/A	II B 2, II C 2	UPLAND	345		345							0.07		
2	L	5A	397.54	397.63	U	N/A	I B 2	UPLAND	496		496							0.09		
2	L	5A	397.63	397.66	PSS1B	FLAT - ORGANIC	II C 2	WETLAND	138	138								0.03		
2	L	5A	397.66	397.72	U	N/A	I B 2	UPLAND	335		335							0.06		
2	L	5A	397.72	397.73	U	N/A	I C 3, II B 2	UPLAND	45		45							0.01		
2	L	5A	397.73	397.74	U	N/A	I B 2	UPLAND	39		39							0.01		
2	L	5A	397.74	397.77	U	N/A	I C 3, II B 2	UPLAND	169		169							0.03		
2	L	5A	397.77	397.85	U	N/A	I B 1	UPLAND	393		393							0.07		
2	L	5A	397.85	397.86	U	N/A	I C 3, II B 2	UPLAND	69		69							0.01		
2	L	5A	397.86	398.18	U	N/A	I B 1	UPLAND	1715		1715							0.32		
2	L	5A	398.18	398.19	D	N/A	NONE	DISTURBED	33			33						0.01		
2	L	5A	398.19	398.57	U	N/A	I B 1	UPLAND	1985		1985							0.38		
2	L	5A	398.57	398.69	U	N/A	I C 1	UPLAND	662		662							0.13		
2	L	5A	398.69	398.71	U	N/A	I A 2	UPLAND	119		119							0.02		
2	L	5A	398.71	398.73	U	N/A	I C 1	UPLAND	73		73							0.01		
2	L	5A	398.73	398.78	U	N/A	I A 2	UPLAND	269		269							0.05		
2	L	5A	398.78	398.93	U	N/A	I C 1	UPLAND	812		812							0.15		
2	L	5A	398.93	398.94	U	N/A	I A 2	UPLAND	42		42							0.01		
2	L	4	398.94	398.94	U	N/A	I A 2	UPLAND	17		17						0.00			
2	L	4	398.94	398.95	PSS1/4B	FLAT - ORGANIC	II A 3, II C 2	WETLAND	48	48							0.01			
2	L	4	398.95	398.96	U	N/A	I A 2	UPLAND	62		62						0.01			
2	L	4	398.96	398.97	PSS1/FO4C	SLOPE	II B 2, I C 3	WETLAND	19	19							0.00			
2	L	WB-S	398.97	398.97	PSS1/FO4C	SLOPE	II B 2, I C 3	WETLAND	10	10										0.00
2	L	WB-S	398.97	398.98	U	N/A	I A 2	UPLAND	50		50									0.01
2	L	4	398.98	398.99	U	N/A	I A 2	UPLAND	55		55						0.01			
2	L	4	398.99	398.99	PSS1/FO4C	SLOPE	II B 2, I C 3	WETLAND	22	22							0.00			
2	L	4	398.99	399.16	PSS4/1B	FLAT - ORGANIC	II A 2, II C 2	WETLAND	866	866							0.16			
2	L	4	399.16	399.46	U	N/A	II A 2	UPLAND	1606		1606						0.30			
2	L	5A	399.46	399.47	U	N/A	II A 2	UPLAND	49		49							0.01		
2	L	5A	399.47	399.64	U	N/A	I A 2	UPLAND	893		893							0.17		
2	L	5A	399.64	399.70	U	N/A	I C 1	UPLAND	305		305							0.06		
2	L	5A	399.70	399.79	U	N/A	I B 1	UPLAND	493		493							0.09		
2	L	5A	399.79	399.80	U	N/A	I C 2	UPLAND	33		33							0.01		
2	L	5A	399.80	399.84	U	N/A	I A 2, II C 2	UPLAND	230		230							0.04		
2	L	5A	399.84	399.85	U	N/A	I C 2	UPLAND	61		61							0.01		
2	L	5A	399.85	399.91	U	N/A	I A 2, II C 2	UPLAND	298		298							0.06		
2	L	5A	399.91	399.91	U	N/A	I A 2, II C 2	UPLAND	19		19							0.00		
2	L	5A	399.91	399.98	U	N/A	I C 1	UPLAND	331		331							0.06		
2	L	5A	399.98	400.02	U	N/A	I A 2, II C 2	UPLAND	211		211							0.04		
2	L	5A	400.02	400.03	U	N/A	II C 2, II B 2	UPLAND	100		100							0.02		
2	L	5A	400.03	400.08	U	N/A	I A 2, II C 2	UPLAND	213		213							0.04		
2	L	5A	400.08	400.10	U	N/A	II B 2, II B 2	UPLAND	122		122							0.02		
2	L	5A	400.10	400.13	U	N/A	I A 2, II C 2	UPLAND	175		175							0.03		
2	L	5A	400.13	400.48	U	N/A	I C 1	UPLAND	1858		1858							0.35		
2	L	5A	400.48	400.67	U	N/A	I B 1	UPLAND	961		961							0.18		
2	L	5A	400.67	400.68	U	N/A	I C 2, I A 2	UPLAND	68		68							0.01		

SPREAD	SECTION	ROW MODE	FROM MP	TO MP	NWI CODE	HGM CLASS	VIERECK	DESCRIPTION	LINEAR FEET	WETLAND FEET	UPLAND FEET	DISTURBED FEET	Comments	Mode 1 - Ice Workpad (miles)	Mode 2 - Frost Pack (miles)	Mode 3 - Timber Mats	Mode 4 - Granular Workpad	Mode 5A - Grade	Mode 5B - Mountain Grade	Stream & Flood Plain Crossings
2	L	4	400.68	400.71	U	N/A	I C 2, I A 2	UPLAND	146		146						0.03			
2	L	4	400.71	400.71	D	N/A	II C 2, III A 1	DISTURBED	42			42					0.01			
2	L	4	400.71	400.72	D	N/A	NONE	DISTURBED	47			47					0.01			
3	A	4	400.72	400.81	U	N/A	I C 2, II B 2	UPLAND	472		472						0.09			
3	A	4	400.81	400.86	U	N/A	I A 2, II B 2	UPLAND	276		276						0.05			
3	A	4	400.86	400.88	PSS4B	FLAT - ORGANIC	I A 2, II C 2	WETLAND	70	70							0.01			
3	A	4	400.88	401.12	PSS1/4B	FLAT - ORGANIC	II C 2, II A 3	WETLAND	1278	1278							0.24			
3	A	4	401.12	401.15	PSS4B	FLAT - ORGANIC	I A 2, II C 2	WETLAND	142	142							0.03			
3	A	4	401.15	401.16	PEM1C	SLOPE	III A 2	WETLAND	77	77							0.01			
3	A	4	401.16	401.23	PSS4/1B	FLAT - ORGANIC	II A 2, II C 2	WETLAND	360	360							0.07			
3	A	4	401.23	401.23	PSS1/EM1C	SLOPE	II B 2, III A 2	WETLAND	18	18							0.00			
3	A	4	401.23	401.24	PSS4/1B	FLAT - ORGANIC	II A 2, II C 2	WETLAND	27	27							0.01			
3	A	4	401.24	401.26	PEM1C	SLOPE	III A 2	WETLAND	101	101							0.02			
3	A	4	401.26	401.28	PSS1/EM1C	SLOPE	II B 2, III A 2	WETLAND	99	99							0.02			
3	A	4	401.28	401.51	PSS4/1B	FLAT - ORGANIC	II A 2, II C 2	WETLAND	1234	1234							0.23			
3	A	4	401.51	401.58	PSS1/4B	FLAT - ORGANIC	II C 2, II A 3	WETLAND	385	385							0.07			
3	A	4	401.58	401.66	PSS4/1B	FLAT - ORGANIC	II A 2, II C 2	WETLAND	427	427							0.08			
3	A	4	401.66	401.67	PEM1B	DEPRESSIONAL	III A 2	WETLAND	59	59							0.01			
3	A	4	401.67	401.69	PSS4/1B	FLAT - ORGANIC	II A 2, II C 2	WETLAND	104	104							0.02			
3	A	4	401.69	401.69	PEM1B	DEPRESSIONAL	III A 2	WETLAND	4	4							0.00			
3	A	4	401.69	401.78	PSS4/1B	FLAT - ORGANIC	II A 2, II C 2	WETLAND	454	454							0.09			
3	A	4	401.78	401.87	PSS1/EM1B	FLAT - ORGANIC	II C 2, III A 2	WETLAND	477	477							0.09			
3	A	4	401.87	401.92	PSS4/1B	FLAT - ORGANIC	II A 2, II C 2	WETLAND	252	252							0.05			
3	A	4	401.92	401.94	PSS1/EM1B	FLAT - ORGANIC	II C 2, III A 2	WETLAND	124	124							0.02			
3	A	4	401.94	402.01	PSS4/1B	FLAT - ORGANIC	II A 2, II C 2	WETLAND	347	347							0.07			
3	A	WB-W	402.01	402.01	PSS4/1B	FLAT - ORGANIC	II A 2, II C 2	WETLAND	25	25										0.00
3	A	WB-W	402.01	402.02	PEM1C	RIVERINE	III A 2	WETLAND	38	38										0.01
3	A	WB-W	402.02	402.04	U	N/A	I B 1	UPLAND	87		87									0.02
3	A	4	402.04	402.18	U	N/A	I B 1	UPLAND	740		740						0.14			
3	A	4	402.18	402.20	U	N/A	I B 1	UPLAND	99		99						0.02			
3	A	4	402.20	402.20	R3USC	RIVERINE	NONE	WETLAND	0	0							0.00			
3	A	WB-W	402.20	402.20	R3USC	RIVERINE	NONE	WETLAND	43	43										0.01
3	A	WB-W	402.20	402.21	R3UBH	RIVERINE	NONE	WETLAND	46	46										0.01
3	A	WB-W	402.21	402.21	U	N/A	I C 2, II B 2	UPLAND	7		7									0.00
3	A	WB-W	402.21	402.22	U	N/A	I B 1	UPLAND	54		54									0.01
3	A	4	402.22	402.29	U	N/A	I B 1	UPLAND	358		358						0.07			
3	A	4	402.29	402.29	PUBH	RIVERINE	NONE	WETLAND	2	2							0.00			
3	A	WB-W	402.29	402.30	PUBH	RIVERINE	NONE	WETLAND	58	58										0.01
3	A	WB-W	402.30	402.32	U	N/A	I C 2	UPLAND	92		92									0.02
3	A	4	402.32	402.35	U	N/A	I C 2	UPLAND	156		156						0.03			
3	A	4	402.35	402.35	PSS1/FO1C	DEPRESSIONAL	II B 2, I B 2	WETLAND	22	22							0.00			
3	A	4	402.35	402.36	U	N/A	I C 2	UPLAND	41		41						0.01			
3	A	4	402.36	402.66	PSS4/1B	FLAT - ORGANIC	I A 2, II C 2	WETLAND	1556	1556							0.29			
3	A	4	402.66	402.70	U	N/A	I C 2	UPLAND	216		216						0.04			
3	A	4	402.70	402.71	PSS4/1B	FLAT - ORGANIC	I A 2, II C 2	WETLAND	70	70							0.01			
3	A	4	402.71	402.72	U	N/A	I B 2	UPLAND	69		69						0.01			
3	A	WB-W	402.72	402.73	U	N/A	I B 2	UPLAND	37		37									0.01
3	A	WB-W	402.73	402.74	PEM1/SS1C	SLOPE	II C 2, III A 1	WETLAND	53	53										0.01
3	A	4	402.74	402.75	PEM1/SS1C	SLOPE	II C 2, III A 1	WETLAND	30	30							0.01			
3	A	4	402.75	402.77	U	N/A	I C 2	UPLAND	106		106						0.02			
3	A	4	402.77	402.78	PEM1/SS1C	SLOPE	II C 2, III A 1	WETLAND	81	81							0.02			
3	A	4	402.78	402.81	U	N/A	I B 2	UPLAND	156		156						0.03			
3	A	4	402.81	402.82	PEM1/SS1C	SLOPE	II C 2, III A 1	WETLAND	28	28							0.01			
3	A	4	402.82	402.82	U	N/A	I C 2	UPLAND	9		9						0.00			
3	A	4	402.82	402.82	PSS1/4B	FLAT - ORGANIC	I A 3, II C 2	WETLAND	21	21							0.00			
3	A	4	402.82	402.86	U	N/A	I C 2	UPLAND	203		203						0.04			
3	A	4	402.86	402.86	PFO4/SS3B	FLAT - ORGANIC	I A 2, II C 2	WETLAND	6	6							0.00			
3	A	4	402.86	402.87	U	N/A	I C 2	UPLAND	47		47						0.01			
3	A	4	402.87	402.91	PSS1B	FLAT - ORGANIC	II C 1, II A 3	WETLAND	213	213							0.04			
3	A	4	402.91	402.92	PFO4/SS3B	FLAT - ORGANIC	I A 2, II C 2	WETLAND	62	62							0.01			
3	A	4	402.92	402.96	PSS1B	FLAT - ORGANIC	II C 1, II A 3	WETLAND	208	208							0.04			
3	A	4	402.96	402.99	U	N/A	I A 2, II C 2	UPLAND	141		141						0.03			
3	A	4	402.99	403.09	PFO4B	FLAT - ORGANIC	I A 2, II B 2	WETLAND	546	546							0.10			
3	A	4	403.09	403.11	PSS1/FO4B	FLAT - ORGANIC	I A 2, II C 2	WETLAND	112	112							0.02			
3	A	4	403.11	403.16	U	N/A	I A 2, II C 2	UPLAND	245		245						0.05			
3	A	4	403.16	403.17	PSS1/FO4B	FLAT - ORGANIC	I A 2, II C 2	WETLAND	35	35							0.01			
3	A	4	403.17	403.18	PSS1/4B	FLAT - ORGANIC	II B 2, I A 3	WETLAND	45	45							0.01			
3	A	4	403.18	403.20	PFO4B	FLAT - ORGANIC	I A 2, II B 2	WETLAND	151	151							0.03			
3	A	4	403.20	403.21	PSS1/4C	SLOPE	II C 1, I A 3	WETLAND	45	45							0.01			
3	A	4	403.21	403.23	PSS1/EM1C	SLOPE	II C 1, III A 3	WETLAND	94	94							0.02			
3	A	4	403.23	403.25	PFO4B	FLAT - ORGANIC	I A 2, II B 2	WETLAND	127	127							0.02			
3	A	4	403.25	403.26	PSS1/EM1C	SLOPE	II C 1, III A 3	WETLAND	43	43							0.01			

SPREAD	SECTION	ROW MODE	FROM MP	TO MP	NWI CODE	HGM CLASS	VIERECK	DESCRIPTION	LINEAR FEET	WETLAND FEET	UPLAND FEET	DISTURBED FEET	Comments	Mode 1 - Ice Workpad (miles)	Mode 2 - Frost Pack (miles)	Mode 3 - Timber Mats	Mode 4 - Granular Workpad	Mode 5A - Grade	Mode 5B - Mountain Grade	Stream & Flood Plain Crossings
3	A	4	403.26	403.27	PFO4B	FLAT - ORGANIC	I A 2, II B 2	WETLAND	33	33							0.01			
3	A	4	403.27	403.27	PSS1/EM1C	SLOPE	II C 1, III A 3	WETLAND	29	29							0.01			
3	A	4	403.27	403.32	PFO4B	FLAT - ORGANIC	I A 2, II B 2	WETLAND	229	229							0.04			
3	A	4	403.32	403.33	PSS1/EM1C	SLOPE	II B 2, III A 3	WETLAND	70	70							0.01			
3	A	4	403.33	403.40	PFO4B	FLAT - ORGANIC	I A 2, II B 2	WETLAND	350	350							0.07			
3	A	4	403.40	403.41	PSS1/4C	SLOPE	II C 1, I A 3	WETLAND	89	89							0.02			
3	A	4	403.41	403.47	PSS4/FO4B	FLAT - ORGANIC	I A 2, II B 1	WETLAND	311	311							0.06			
3	A	4	403.47	403.48	PSS4/1B	FLAT - ORGANIC	I A 2, II C 2	WETLAND	20	20							0.00			
3	A	4	403.48	403.49	PSS4/FO4B	FLAT - ORGANIC	I A 2, II B 1	WETLAND	54	54							0.01			
3	A	4	403.49	403.50	U	N/A	I B 2, II B 2	UPLAND	51		51						0.01			
3	A	WB-W	403.50	403.51	U	N/A	I B 2, II B 2	UPLAND	60		60									0.01
3	A	4	403.51	403.51	U	N/A	I B 2, II B 2	UPLAND	33		33						0.01			
3	A	4	403.51	403.54	PFO4/SS4B	FLAT - ORGANIC	I A 2, II B 2	WETLAND	145	145							0.03			
3	A	4	403.54	403.58	U	N/A	I A 2, II B 2	UPLAND	202		202						0.04			
3	A	4	403.58	403.60	U	N/A	I B 2	UPLAND	119		119						0.02			
3	A	4	403.60	403.62	U	N/A	I A 2, II B 2	UPLAND	110		110						0.02			
3	A	4	403.62	403.63	PFO4/SS4B	SLOPE	I A 2, II B 2	WETLAND	10	10							0.00			
3	A	4	403.63	403.74	U	N/A	I A 2, II B 2	UPLAND	580		580						0.11			
3	A	4	403.74	403.76	U	N/A	I B 2	UPLAND	135		135						0.03			
3	A	4	403.76	403.77	U	N/A	I A 2, II B 2	UPLAND	30		30						0.01			
3	A	4	403.77	403.83	PFO4/SS4B	FLAT - ORGANIC	I A 2, II B 2	WETLAND	310	310							0.06			
3	A	4	403.83	403.83	U	N/A	I A 2, II B 2	UPLAND	22		22						0.00			
3	A	4	403.83	403.84	U	N/A	I C 2	UPLAND	57		57						0.01			
3	A	4	403.84	403.91	U	N/A	I A 2, II B 2	UPLAND	373		373						0.07			
3	A	4	403.91	403.94	PFO4/SS4B	FLAT - ORGANIC	I A 2, II B 2	WETLAND	175	175							0.03			
3	A	4	403.94	403.95	PSS1/4B	SLOPE	I A 3, II C 2	WETLAND	60	60							0.01			
3	A	4	403.95	404.00	PFO4/SS4B	FLAT - ORGANIC	I A 2, II B 2	WETLAND	217	217							0.04			
3	A	4	404.00	404.01	U	N/A	I A 2, II B 2	UPLAND	49		49						0.01			
3	A	4	404.01	404.06	PFO4/SS4B	FLAT - ORGANIC	I A 2, II B 2	WETLAND	270	270							0.05			
3	A	4	404.06	404.14	U	N/A	I A 2	UPLAND	442		442						0.08			
3	A	4	404.14	404.15	U	N/A	I C 2	UPLAND	69		69						0.01			
3	A	4	404.15	404.17	PFO4/SS4B	FLAT - ORGANIC	I A 2, II A 2	WETLAND	107	107							0.02			
3	A	4	404.17	404.21	PSS4/1B	FLAT - ORGANIC	II A 2, II C 2	WETLAND	217	217							0.04			
3	A	4	404.21	404.22	PSS1/4B	FLAT - ORGANIC	II A 3, II C 2	WETLAND	28	28							0.01			
3	A	4	404.22	404.23	U	N/A	I C 2	UPLAND	66		66						0.01			
3	A	4	404.23	404.25	PFO4/SS4B	FLAT - ORGANIC	I A 2, II A 2	WETLAND	77	77							0.01			
3	A	4	404.25	404.26	PSS4/FO4B	FLAT - ORGANIC	II A 2, I A 2	WETLAND	51	51							0.01			
3	A	4	404.26	404.32	PFO4/SS4B	FLAT - ORGANIC	I A 2, II A 2	WETLAND	308	308							0.06			
3	A	4	404.32	404.33	PSS4/FO4B	FLAT - ORGANIC	II A 2, I A 2	WETLAND	80	80							0.02			
3	A	4	404.33	404.41	PFO4/SS4B	FLAT - ORGANIC	I A 2, II A 2	WETLAND	399	399							0.08			
3	A	4	404.41	404.42	U	N/A	I C 2	UPLAND	60		60						0.01			
3	A	4	404.42	404.43	PSS1/4B	SLOPE	II A 3, II C 2	WETLAND	75	75							0.01			
3	A	4	404.43	404.44	PSS4B	FLAT - ORGANIC	II A 2	WETLAND	23	23							0.00			
3	A	4	404.44	404.47	U	N/A	I A 2	UPLAND	201		201						0.04			
3	A	4	404.47	404.50	PSS4B	FLAT - ORGANIC	II A 2	WETLAND	133	133							0.03			
3	A	4	404.50	404.53	U	N/A	I A 2	UPLAND	180		180						0.03			
3	A	4	404.53	404.54	PSS4B	FLAT - ORGANIC	II A 2	WETLAND	54	54							0.01			
3	A	4	404.54	404.56	U	N/A	I A 2	UPLAND	104		104						0.02			
3	A	4	404.56	404.61	PSS4B	FLAT - ORGANIC	II A 2	WETLAND	224	224							0.04			
3	A	4	404.61	404.61	PSS1/4B	SLOPE	II A 3, II C 2	WETLAND	21	21							0.00			
3	A	4	404.61	404.66	PSS4B	FLAT - ORGANIC	II A 2	WETLAND	273	273							0.05			
3	A	4	404.66	404.68	PFO4/SS4B	FLAT - ORGANIC	I A 2, II A 2	WETLAND	85	85							0.02			
3	A	4	404.68	404.69	U	N/A	I A 2	UPLAND	81		81						0.02			
3	A	4	404.69	404.71	PSS4B	FLAT - ORGANIC	II A 2	WETLAND	86	86							0.02			
3	A	4	404.71	404.72	PFO4/SS4B	SLOPE	I A 2, II A 2	WETLAND	68	68							0.01			
3	A	4	404.72	404.80	PFO4/SS4B	FLAT - ORGANIC	I A 2, II A 2	WETLAND	416	416							0.08			
3	A	4	404.80	404.84	U	N/A	I A 2	UPLAND	208		208						0.04			
3	A	4	404.84	404.85	PFO4B	FLAT - ORGANIC	I A 2	WETLAND	56	56							0.01			
3	A	4	404.85	404.90	U	N/A	I A 2	UPLAND	274		274						0.05			
3	A	4	404.90	404.96	PFO4B	FLAT - ORGANIC	I A 2	WETLAND	297	297							0.06			
3	A	4	404.96	405.01	U	N/A	I A 2	UPLAND	281		281						0.05			
3	A	4	405.01	405.04	PFO4B	FLAT - ORGANIC	I A 2	WETLAND	164	164							0.03			
3	A	4	405.04	405.11	U	N/A	I A 2	UPLAND	352		352						0.07			
3	A	4	405.11	405.14	PFO4/SS4B	FLAT - ORGANIC	I A 2, II A 2	WETLAND	137	137							0.03			
3	A	4	405.14	405.15	U	N/A	II C 2	UPLAND	95		95						0.02			
3	A	4	405.15	405.17	U	N/A	I A 2	UPLAND	106		106						0.02			
3	A	4	405.17	405.19	PSS1B	SLOPE	II C 1	WETLAND	70	70							0.01			
3	A	4	405.19	405.19	U	N/A	I A 2	UPLAND	30		30						0.01			
3	A	4	405.19	405.21	PFO4/SS1B	FLAT - ORGANIC	I A 2, II C 2	WETLAND	96	96							0.02			
3	A	4	405.21	405.24	U	N/A	I A 2	UPLAND	150		150						0.03			
3	A	4	405.24	405.29	U	N/A	I C 2	UPLAND	266		266						0.05			
3	A	4	405.29	405.29	PSS1B	SLOPE	II B 2	WETLAND	13	13							0.00			

SPREAD	SECTION	ROW MODE	FROM MP	TO MP	NWI CODE	HGM CLASS	VIERECK	DESCRIPTION	LINEAR FEET	WETLAND FEET	UPLAND FEET	DISTURBED FEET	Comments	Mode 1 - Ice Workpad (miles)	Mode 2 - Frost Pack (miles)	Mode 3 - Timber Mats	Mode 4 - Granular Workpad	Mode 5A - Grade	Mode 5B - Mountain Grade	Stream & Flood Plain Crossings
3	A	WB-W	405.29	405.30	PSS1B	SLOPE	II B 2	WETLAND	45	45										0.01
3	A	WB-W	405.30	405.31	U	N/A	I A 2	UPLAND	44		44									0.01
3	A	WB-W	405.31	405.31	U	N/A	I C 2	UPLAND	1		1									0.00
3	A	4	405.31	405.33	U	N/A	I C 2	UPLAND	128		128						0.02			
3	A	4	405.33	405.40	U	N/A	I A 2	UPLAND	338		338						0.06			
3	A	4	405.40	405.42	PFO4/SS1B	FLAT - ORGANIC	I A 2	WETLAND	99	99							0.02			
3	A	4	405.42	405.43	U	N/A	I A 2	UPLAND	97		97						0.02			
3	A	4	405.43	405.48	U	N/A	I C 2	UPLAND	257		257						0.05			
3	A	4	405.48	405.51	U	N/A	I A 2	UPLAND	141		141						0.03			
3	A	4	405.51	405.52	U	N/A	I C 2	UPLAND	80		80						0.02			
3	A	4	405.52	405.55	U	N/A	I A 2	UPLAND	108		108						0.02			
3	A	4	405.55	405.63	U	N/A	I C 2	UPLAND	439		439						0.08			
3	A	4	405.63	405.65	U	N/A	I A 2	UPLAND	105		105						0.02			
3	A	4	405.65	405.67	U	N/A	I C 2	UPLAND	129		129						0.02			
3	A	4	405.67	405.71	U	N/A	I A 2	UPLAND	200		200						0.04			
3	A	4	405.71	405.90	U	N/A	I C 2	UPLAND	998		998						0.19			
3	A	WB-W	405.90	405.91	U	N/A	I C 2	UPLAND	60		60									0.01
3	A	4	405.91	406.00	U	N/A	I C 2	UPLAND	463		463						0.09			
3	A	4	406.00	406.00	PSS1/FO4B	SLOPE	I A 3, II B 2	WETLAND	24	24							0.00			
3	A	4	406.00	406.01	U	N/A	I C 2	UPLAND	38		38						0.01			
3	A	4	406.01	406.04	PSS4/FO4B	FLAT - ORGANIC	II A 2, I A 2	WETLAND	161	161							0.03			
3	A	4	406.04	406.06	U	N/A	I A 2	UPLAND	113		113						0.02			
3	A	4	406.06	406.08	PSS4/FO4B	FLAT - ORGANIC	II A 2, I A 2	WETLAND	91	91							0.02			
3	A	4	406.08	406.09	U	N/A	I A 2	UPLAND	28		28						0.01			
3	A	4	406.09	406.09	PSS1/FO4B	SLOPE	I A 3, II B 2	WETLAND	26	26							0.00			
3	A	4	406.09	406.10	U	N/A	I A 2	UPLAND	61		61						0.01			
3	A	4	406.10	406.10	PSS4/FO4B	FLAT - ORGANIC	II A 2, I A 2	WETLAND	11	11							0.00			
3	A	4	406.10	406.12	PSS1B	SLOPE	II B 2, II C 2	WETLAND	90	90							0.02			
3	A	4	406.12	406.14	PFO4B	FLAT - ORGANIC	I A 2	WETLAND	120	120							0.02			
3	A	4	406.14	406.15	PSS1B	SLOPE	II B 2, II C 2	WETLAND	45	45							0.01			
3	A	4	406.15	406.16	U	N/A	I A 2	UPLAND	48		48						0.01			
3	A	4	406.16	406.18	PFO4/SS1B	FLAT - ORGANIC	I A 2, II B 2	WETLAND	105	105							0.02			
3	A	4	406.18	406.20	PSS1B	SLOPE	II B 2, II C 2	WETLAND	84	84							0.02			
3	A	4	406.20	406.20	PSS1/FO4B	SLOPE	I A 3, II C 2	WETLAND	4	4							0.00			
3	A	4	406.20	406.20	U	N/A	I A 2	UPLAND	35		35						0.01			
3	A	4	406.20	406.21	PSS1/FO4B	SLOPE	I A 3, II C 2	WETLAND	24	24							0.00			
3	A	4	406.21	406.26	U	N/A	I A 2	UPLAND	264		264						0.05			
3	A	4	406.26	406.27	PSS1/FO4B	SLOPE	I A 3, II C 2	WETLAND	34	34							0.01			
3	A	4	406.27	406.34	U	N/A	I A 2	UPLAND	385		385						0.07			
3	A	4	406.34	406.35	PFO4B	FLAT - ORGANIC	I A 2	WETLAND	70	70							0.01			
3	A	4	406.35	406.44	U	N/A	I A 2, II C 2	UPLAND	468		468						0.09			
3	A	4	406.44	406.45	PFO4B	FLAT - ORGANIC	I A 2	WETLAND	69	69							0.01			
3	A	4	406.45	406.49	U	N/A	I A 2, II C 2	UPLAND	174		174						0.03			
3	A	4	406.49	406.49	U	N/A	I C 2	UPLAND	19		19						0.00			
3	A	4	406.49	406.49	PFO1/4B	SLOPE	I C 2, II C 2	WETLAND	26	26							0.00			
3	A	4	406.49	406.50	U	N/A	I C 2	UPLAND	28		28						0.01			
3	A	4	406.50	406.51	U	N/A	I A 2	UPLAND	61		61						0.01			
3	A	4	406.51	406.52	U	N/A	I C 2	UPLAND	32		32						0.01			
3	A	4	406.52	406.64	U	N/A	I A 2, II C 2	UPLAND	650		650						0.12			
3	A	4	406.64	406.65	PSS4/1B	FLAT - ORGANIC	II A 2, II C 2	WETLAND	45	45							0.01			
3	A	4	406.65	406.66	U	N/A	I A 2, II C 2	UPLAND	50		50						0.01			
3	A	4	406.66	406.67	U	N/A	I C 2	UPLAND	73		73						0.01			
3	A	4	406.67	406.68	U	N/A	I A 2, II C 2	UPLAND	43		43						0.01			
3	A	4	406.68	406.76	PSS4/1B	FLAT - ORGANIC	II A 2, II C 2	WETLAND	398	398							0.08			
3	A	4	406.76	406.90	U	N/A	II A 2	UPLAND	761		761						0.14			
3	A	4	406.90	406.91	PSS1/4B	SLOPE	II A 3, II C 2	WETLAND	56	56							0.01			
3	A	4	406.91	406.98	U	N/A	II A 2	UPLAND	344		344						0.07			
3	A	4	406.98	406.99	U	N/A	I C 2, I B 2	UPLAND	101		101						0.02			
3	A	4	406.99	407.03	U	N/A	II A 2	UPLAND	176		176						0.03			
3	A	4	407.03	407.04	U	N/A	I C 2, I B 2	UPLAND	44		44						0.01			
3	A	4	407.04	407.06	U	N/A	I A 2	UPLAND	135		135						0.03			
3	A	4	407.06	407.07	PSS1C	SLOPE	II C 2, II B 2	WETLAND	18	18							0.00			
3	A	4	407.07	407.13	U	N/A	II A 2	UPLAND	319		319						0.06			
3	A	4	407.13	407.14	U	N/A	I C 2, I B 2	UPLAND	68		68						0.01			
3	A	4	407.14	407.30	U	N/A	I A 2	UPLAND	875		875						0.17			
3	A	4	407.30	407.32	PFO4/SS1B	FLAT - ORGANIC	I A 2, II C 2	WETLAND	76	76							0.01			
3	A	4	407.32	407.33	U	N/A	I A 2	UPLAND	76		76						0.01			
3	A	4	407.33	407.34	PFO4B	FLAT - ORGANIC	I A 2	WETLAND	61	61							0.01			
3	A	4	407.34	407.47	U	N/A	I A 2	UPLAND	642		642						0.12			
3	A	4	407.47	407.50	U	N/A	II A 1	UPLAND	173		173						0.03			
3	A	4	407.50	407.53	U	N/A	I A 2	UPLAND	150		150						0.03			
3	A	4	407.53	407.54	U	N/A	I C 2, II B 2	UPLAND	48		48						0.01			

SPREAD	SECTION	ROW MODE	FROM MP	TO MP	NWI CODE	HGM CLASS	VIERECK	DESCRIPTION	LINEAR FEET	WETLAND FEET	UPLAND FEET	DISTURBED FEET	Comments	Mode 1 - Ice Workpad (miles)	Mode 2 - Frost Pack (miles)	Mode 3 - Timber Mats	Mode 4 - Granular Workpad	Mode 5A - Grade	Mode 5B - Mountain Grade	Stream & Flood Plain Crossings
3	A	WB-W	407.54	407.55	U	N/A	I C 2, II B 2	UPLAND	60		60									0.01
3	A	4	407.55	407.56	U	N/A	I C 2, II B 2	UPLAND	76		76						0.01			
3	A	4	407.56	407.57	U	N/A	I A 2	UPLAND	21		21						0.00			
3	A	4	407.57	407.60	U	N/A	II A 1	UPLAND	201		201						0.04			
3	A	4	407.60	407.61	PFO4/SS1B	SLOPE	I A 2, II C 2	WETLAND	31	31							0.01			
3	A	4	407.61	407.65	U	N/A	I A 2, II C 2	UPLAND	225		225						0.04			
3	A	4	407.65	407.66	PSS4/1B	FLAT - ORGANIC	II A 2, II C 2	WETLAND	66	66							0.01			
3	A	4	407.66	407.68	PSS1/EM1B	FLAT - ORGANIC	II C 2	WETLAND	99	99							0.02			
3	A	4	407.68	407.70	PSS4/1B	FLAT - ORGANIC	II A 2, II C 2	WETLAND	110	110							0.02			
3	A	4	407.70	407.76	U	N/A	I A 2, II C 2	UPLAND	296		296						0.06			
3	A	4	407.76	407.82	U	N/A	I C 2, II C 2	UPLAND	304		304						0.06			
3	A	4	407.82	407.84	U	N/A	I C 1, I B 1	UPLAND	134		134						0.03			
3	A	4	407.84	407.96	U	N/A	I C 2, II C 2	UPLAND	601		601						0.11			
3	A	4	407.96	408.36	U	N/A	I C 2, II C 2	UPLAND	2125		2125						0.40			
3	A	4	408.36	408.38	PFO4/SS1B	FLAT - ORGANIC	I A 2	WETLAND	98	98							0.02			
3	A	4	408.38	408.40	PSS1/FO4B	SLOPE	I A 3	WETLAND	139	139							0.03			
3	A	4	408.40	408.43	PSS1/FO4B	FLAT - ORGANIC	I A 3, I A 2	WETLAND	115	115							0.02			
3	A	4	408.43	408.44	PSS1C	SLOPE	II C 2, II B 2	WETLAND	77	77							0.01			
3	A	4	408.44	408.46	U	N/A	I B 3	UPLAND	110		110						0.02			
3	A	4	408.46	408.49	PSS4/1B	SLOPE	II A 2, I A 3	WETLAND	159	159							0.03			
3	A	4	408.49	408.63	PFO4/SS1B	FLAT - ORGANIC	I A 2, I A 3	WETLAND	740	740							0.14			
3	A	4	408.63	408.65	PSS1/EM1C	SLOPE	II C 2, II A 3	WETLAND	105	105							0.02			
3	A	4	408.65	408.68	PFO4/SS1B	FLAT - ORGANIC	I A 2, I A 3	WETLAND	145	145							0.03			
3	A	4	408.68	408.68	U	N/A	I C 2	UPLAND	23		23						0.00			
3	A	WB-W	408.68	408.69	U	N/A	I C 2	UPLAND	47		47									0.01
3	A	WB-W	408.69	408.70	PSS1A	RIVERINE	II B 2, I C 3	WETLAND	13	13										0.00
3	A	WB-W	408.70	408.70	U	N/A	I C 2	UPLAND	30		30									0.01
3	A	4	408.70	408.70	U	N/A	I C 2	UPLAND	4		4						0.00			
3	A	4	408.70	408.78	U	N/A	I A 2	UPLAND	405		405						0.08			
3	A	4	408.78	408.80	PFO4/SS1B	FLAT - ORGANIC	I A 2, II C 2	WETLAND	133	133							0.03			
3	A	4	408.80	408.82	PSS4/FO4B	FLAT - ORGANIC	II A 2, I A 3	WETLAND	73	73							0.01			
3	A	4	408.82	408.83	PSS4/FO4B	FLAT - ORGANIC	II A 2, I A 3	WETLAND	93	93							0.02			
3	B	4	408.83	408.95	PSS4/FO4B	FLAT - ORGANIC	II A 2, I A 3	WETLAND	592	592							0.11			
3	B	4	408.95	408.98	U	N/A	I A 2	UPLAND	192		192						0.04			
3	B	4	408.98	409.02	U	N/A	I C 2	UPLAND	194		194						0.04			
3	B	4	409.02	409.57	U	N/A	I A 2	UPLAND	2916		2916						0.55			
3	B	4	409.57	409.62	U	N/A	I C 2	UPLAND	243		243						0.05			
3	B	4	409.62	409.66	U	N/A	I A 2, I A 1	UPLAND	197		197						0.04			
3	B	4	409.66	409.68	U	N/A	I C 2	UPLAND	153		153						0.03			
3	B	4	409.68	409.70	U	N/A	I A 2, I A 1	UPLAND	55		55						0.01			
3	B	5A	409.70	409.81	U	N/A	I A 2, I A 1	UPLAND	632		632							0.12		
3	B	5A	409.81	409.82	U	N/A	I C 2	UPLAND	46		46							0.01		
3	B	5A	409.82	410.05	U	N/A	I A 2, I A 1	UPLAND	1185		1185							0.22		
3	B	5A	410.05	410.06	U	N/A	I C 1, I B 1	UPLAND	57		57							0.01		
3	B	5A	410.06	410.27	U	N/A	I A 2, I A 1	UPLAND	1098		1098							0.21		
3	B	5A	410.27	410.28	U	N/A	I C 1, I B 1	UPLAND	67		67							0.01		
3	B	5A	410.28	410.54	U	N/A	I A 2, I A 1	UPLAND	1356		1356							0.26		
3	B	5A	410.54	410.56	U	N/A	I C 1, I B 1	UPLAND	121		121							0.02		
3	B	5A	410.56	411.05	U	N/A	I A 2, I A 1	UPLAND	2614		2614							0.50		
3	B	5A	411.05	411.09	U	N/A	I C 2	UPLAND	202		202							0.04		
3	B	5A	411.09	411.56	U	N/A	I A 2, I A 1	UPLAND	2477		2477							0.47		
3	B	5A	411.56	411.59	U	N/A	I C 2	UPLAND	170		170							0.03		
3	B	5A	411.59	411.68	U	N/A	I A 2, I A 1	UPLAND	436		436							0.08		
3	B	5A	411.68	411.73	U	N/A	I A 2, I A 1	UPLAND	280		280							0.05		
3	B	5A	411.73	412.21	U	N/A	I A 2, I A 1	UPLAND	2538		2538							0.48		
3	B	5A	412.21	412.21	U	N/A	II D 2, II B 2	UPLAND	9		9							0.00		
3	B	4	412.21	412.38	U	N/A	II D 2, II B 2	UPLAND	864		864						0.16			
3	B	4	412.38	412.38	U	N/A	I A 2	UPLAND	6		6						0.00			
3	B	5A	412.38	412.71	U	N/A	I A 2	UPLAND	1758		1758							0.33		
3	B	5A	412.71	412.86	U	N/A	I A 2	UPLAND	770		770							0.15		
3	B	5A	412.86	412.86	U	N/A	I C 2	UPLAND	14		14							0.00		
3	B	5A	412.86	413.03	U	N/A	I A 2	UPLAND	896		896							0.17		
3	B	5A	413.03	413.04	U	N/A	I C 2	UPLAND	51		51							0.01		
3	B	5A	413.04	413.24	U	N/A	I A 2	UPLAND	1093		1093							0.21		
3	B	5A	413.24	413.27	PFO4/SS1B	FLAT - ORGANIC	I A 2	WETLAND	116	116								0.02		
3	B	5A	413.27	413.44	U	N/A	I A 2	UPLAND	932		932							0.18		
3	B	5A	413.44	413.45	U	N/A	I A 2	UPLAND	15		15							0.00		
3	B	5A	413.45	413.47	U	N/A	I C 1	UPLAND	106		106							0.02		
3	B	5A	413.47	413.60	U	N/A	I A 2	UPLAND	683		683							0.13		
3	B	5A	413.60	413.66	U	N/A	I C 1	UPLAND	336		336							0.06		
3	B	5A	413.66	413.72	U	N/A	I A 2	UPLAND	325		325							0.06		
3	B	5A	413.72	413.93	U	N/A	I A 2	UPLAND	1120		1120							0.21		

SPREAD	SECTION	ROW MODE	FROM MP	TO MP	NWI CODE	HGM CLASS	VIERECK	DESCRIPTION	LINEAR FEET	WETLAND FEET	UPLAND FEET	DISTURBED FEET	Comments	Mode 1 - Ice Workpad (miles)	Mode 2 - Frost Pack (miles)	Mode 3 - Timber Mats	Mode 4 - Granular Workpad	Mode 5A - Grade	Mode 5B - Mountain Grade	Stream & Flood Plain Crossings
3	B	5A	413.93	413.95	U	N/A	I C 1	UPLAND	80		80							0.02		
3	B	5A	413.95	413.97	U	N/A	I A 2	UPLAND	126		126							0.02		
3	B	5A	413.97	413.98	U	N/A	I C 1	UPLAND	68		68							0.01		
3	B	5A	413.98	414.04	U	N/A	I B 1	UPLAND	317		317							0.06		
3	B	5A	414.04	414.05	U	N/A	I C 1	UPLAND	30		30							0.01		
3	B	5A	414.05	414.10	U	N/A	I A 2	UPLAND	242		242							0.05		
3	B	5A	414.10	414.11	U	N/A	I C 1	UPLAND	68		68							0.01		
3	B	5A	414.11	414.22	U	N/A	I A 2	UPLAND	604		604							0.11		
3	B	5A	414.22	414.33	U	N/A	I A 2	UPLAND	585		585							0.11		
3	B	5A	414.33	414.37	U	N/A	I B 1	UPLAND	192		192							0.04		
3	B	5A	414.37	414.46	U	N/A	I A 2	UPLAND	495		495							0.09		
3	B	5A	414.46	414.50	U	N/A	I A 2	UPLAND	169		169							0.03		
3	B	5A	414.50	414.51	U	N/A	I C 2	UPLAND	48		48							0.01		
3	B	5A	414.51	414.51	U	N/A	II D 2	UPLAND	48		48							0.01		
3	B	5A	414.51	414.55	U	N/A	I C 2	UPLAND	199		199							0.04		
3	B	5A	414.55	414.58	U	N/A	I C 2	UPLAND	130		130							0.02		
3	B	5A	414.58	414.63	U	N/A	I A 2	UPLAND	303		303							0.06		
3	B	5A	414.63	414.65	U	N/A	I C 2	UPLAND	79		79							0.02		
3	B	5A	414.65	414.69	U	N/A	I C 2	UPLAND	211		211							0.04		
3	B	5A	414.69	414.74	U	N/A	I A 2	UPLAND	274		274							0.05		
3	B	5A	414.74	414.77	U	N/A	I C 2	UPLAND	139		139							0.03		
3	B	5A	414.77	414.90	U	N/A	I C 1	UPLAND	695		695							0.13		
3	B	5A	414.90	414.96	PFO4B	FLAT - ORGANIC	I A 2	WETLAND	346	346								0.07		
3	B	5A	414.96	415.01	U	N/A	I C 1, I B 1	UPLAND	246		246							0.05		
3	B	5A	415.01	415.10	U	N/A	I A 2	UPLAND	479		479							0.09		
3	B	5A	415.10	415.21	U	N/A	I C 1	UPLAND	565		565							0.11		
3	B	5A	415.21	415.26	U	N/A	I A 2	UPLAND	252		252							0.05		
3	B	5A	415.26	415.28	U	N/A	I C 1	UPLAND	106		106							0.02		
3	B	5A	415.28	415.29	U	N/A	I C 1	UPLAND	93		93							0.02		
3	B	5A	415.29	415.42	U	N/A	I C 2	UPLAND	657		657							0.12		
3	B	5A	415.42	415.52	U	N/A	I C 1	UPLAND	560		560							0.11		
3	B	5A	415.52	415.79	U	N/A	I B 1	UPLAND	1396		1396							0.26		
3	B	5A	415.79	415.93	U	N/A	I A 2	UPLAND	729		729							0.14		
3	B	5A	415.93	415.98	U	N/A	I C 2	UPLAND	270		270							0.05		
3	B	5A	415.98	415.98	U	N/A	I B 1	UPLAND	29		29							0.01		
3	B	5A	415.98	416.01	U	N/A	I C 2	UPLAND	150		150							0.03		
3	B	5A	416.01	416.02	U	N/A	II D 2, I A 3	UPLAND	54		54							0.01		
3	B	5A	416.02	416.03	U	N/A	II D 2, I A 3	UPLAND	46		46							0.01		
3	B	5A	416.03	416.12	U	N/A	I B 1	UPLAND	483		483							0.09		
3	B	5A	416.12	416.13	U	N/A	I C 3, II C 2	UPLAND	35		35							0.01		
3	B	5A	416.13	416.13	U	N/A	I B 1	UPLAND	24		24							0.00		
3	B	5A	416.13	416.16	U	N/A	I C 3, II C 2	UPLAND	123		123							0.02		
3	B	5A	416.16	416.17	U	N/A	II D 2	UPLAND	64		64							0.01		
3	B	5A	416.17	416.18	U	N/A	I A 3	UPLAND	62		62							0.01		
3	B	5A	416.18	416.19	U	N/A	I C 3, II C 2	UPLAND	31		31							0.01		
3	B	5A	416.19	416.19	U	N/A	I A 3	UPLAND	33		33							0.01		
3	B	5A	416.19	416.20	U	N/A	II D 2	UPLAND	35		35							0.01		
3	B	5A	416.20	416.20	U	N/A	II D 2	UPLAND	25		25							0.00		
3	B	5A	416.20	416.32	U	N/A	I B 1	UPLAND	591		591							0.11		
3	B	5A	416.32	416.33	U	N/A	I A 2	UPLAND	63		63							0.01		
3	B	5A	416.33	416.34	U	N/A	I A 2	UPLAND	57		57							0.01		
3	B	5A	416.34	416.35	U	N/A	I B 1	UPLAND	70		70							0.01		
3	B	5A	416.35	416.46	U	N/A	I A 2	UPLAND	561		561							0.11		
3	B	5A	416.46	416.46	U	N/A	I C 2	UPLAND	31		31							0.01		
3	B	5A	416.46	416.48	U	N/A	I A 2	UPLAND	56		56							0.01		
3	B	5A	416.48	416.49	U	N/A	I C 2	UPLAND	52		52							0.01		
3	B	5A	416.49	416.62	U	N/A	I A 2	UPLAND	716		716							0.14		
3	B	5A	416.62	416.75	U	N/A	II A 2	UPLAND	662		662							0.13		
3	B	5A	416.75	416.76	PSS4/FO4B	FLAT - ORGANIC	II A 2	WETLAND	92	92								0.02		
3	B	5A	416.76	416.94	U	N/A	I A 2	UPLAND	908		908							0.17		
3	B	5A	416.94	416.95	U	N/A	I C 1	UPLAND	72		72							0.01		
3	B	5A	416.95	417.03	U	N/A	I A 2	UPLAND	412		412							0.08		
3	B	5A	417.03	417.15	U	N/A	I C 1	UPLAND	624		624							0.12		
3	B	5A	417.15	417.17	U	N/A	I B 1	UPLAND	146		146							0.03		
3	B	5A	417.17	417.20	U	N/A	I C 1	UPLAND	121		121							0.02		
3	B	5A	417.20	417.22	U	N/A	I A 2	UPLAND	105		105							0.02		
3	B	5A	417.22	417.23	U	N/A	I C 1	UPLAND	71		71							0.01		
3	B	5A	417.23	417.25	U	N/A	I A 2	UPLAND	91		91							0.02		
3	B	5A	417.25	417.26	U	N/A	II B 2, I C 3	UPLAND	53		53							0.01		
3	B	5A	417.26	417.27	U	N/A	I A 2	UPLAND	93		93							0.02		
3	B	5A	417.27	417.33	U	N/A	I C 2	UPLAND	303		303							0.06		
3	B	5A	417.33	417.42	U	N/A	I A 2	UPLAND	454		454							0.09		

SPREAD	SECTION	ROW MODE	FROM MP	TO MP	NWI CODE	HGM CLASS	VIERECK	DESCRIPTION	LINEAR FEET	WETLAND FEET	UPLAND FEET	DISTURBED FEET	Comments	Mode 1 - Ice Workpad (miles)	Mode 2 - Frost Pack (miles)	Mode 3 - Timber Mats	Mode 4 - Granular Workpad	Mode 5A - Grade	Mode 5B - Mountain Grade	Stream & Flood Plain Crossings
3	B	5A	417.42	417.43	U	N/A	I A 3	UPLAND	45		45							0.01		
3	B	5A	417.43	417.47	U	N/A	I A 2	UPLAND	240		240							0.05		
3	B	5A	417.47	417.49	U	N/A	I C 1	UPLAND	95		95							0.02		
3	B	5A	417.49	417.56	U	N/A	I A 2	UPLAND	395		395							0.07		
3	B	5A	417.56	417.57	U	N/A	I C 1	UPLAND	40		40							0.01		
3	B	5A	417.57	417.59	U	N/A	I A 2	UPLAND	112		112							0.02		
3	B	5A	417.59	417.63	PFO4B	FLAT - ORGANIC	I A 2	WETLAND	176	176								0.03		
3	B	5A	417.63	418.24	U	N/A	I A 2	UPLAND	3253		3253							0.62		
3	B	5A	418.24	418.26	U	N/A	I C 2	UPLAND	75		75							0.01		
3	B	5A	418.26	418.43	U	N/A	I A 2	UPLAND	927		927							0.18		
3	B	5A	418.43	418.44	U	N/A	I C 2	UPLAND	23		23							0.00		
3	B	5A	418.44	418.52	U	N/A	I C 1	UPLAND	460		460							0.09		
3	B	5A	418.52	418.54	U	N/A	I C 2	UPLAND	84		84							0.02		
3	B	5A	418.54	418.58	U	N/A	I A 2	UPLAND	228		228							0.04		
3	B	5A	418.58	418.60	U	N/A	I C 2	UPLAND	97		97							0.02		
3	B	5A	418.60	418.62	U	N/A	I A 2	UPLAND	108		108							0.02		
3	B	5A	418.62	418.65	U	N/A	I C 2	UPLAND	129		129							0.02		
3	B	5A	418.65	418.79	U	N/A	I C 1	UPLAND	771		771							0.15		
3	B	5A	418.79	418.84	U	N/A	I A 2	UPLAND	244		244							0.05		
3	B	5A	418.84	418.93	U	N/A	I C 1	UPLAND	506		506							0.10		
3	B	5A	418.93	418.95	U	N/A	I A 2	UPLAND	57		57							0.01		
3	B	5A	418.95	419.02	U	N/A	I C 1	UPLAND	391		391							0.07		
3	B	5A	419.02	419.07	U	N/A	I A 2	UPLAND	259		259							0.05		
3	B	5A	419.07	419.08	U	N/A	I A 2	UPLAND	76		76							0.01		
3	B	5A	419.08	419.10	U	N/A	I C 1	UPLAND	76		76							0.01		
3	B	5A	419.10	419.13	U	N/A	I A 2	UPLAND	159		159							0.03		
3	B	5A	419.13	419.16	U	N/A	I C 1	UPLAND	154		154							0.03		
3	B	5A	419.16	419.29	U	N/A	I A 2	UPLAND	685		685							0.13		
3	B	5A	419.29	419.31	U	N/A	I C 1	UPLAND	107		107							0.02		
3	B	5A	419.31	419.42	U	N/A	I A 2	UPLAND	609		609							0.12		
3	B	5A	419.42	419.43	U	N/A	I C 1	UPLAND	44		44							0.01		
3	B	5A	419.43	419.58	U	N/A	I A 2	UPLAND	796		796							0.15		
3	B	5A	419.58	419.63	U	N/A	I C 1	UPLAND	275		275							0.05		
3	B	5A	419.63	419.65	U	N/A	I A 2	UPLAND	66		66							0.01		
3	B	5A	419.65	419.90	U	N/A	I C 1	UPLAND	1364		1364							0.26		
3	B	5A	419.90	419.91	U	N/A	I A 2	UPLAND	50		50							0.01		
3	B	5A	419.91	420.13	U	N/A	I C 1	UPLAND	1143		1143							0.22		
3	B	5A	420.13	420.16	U	N/A	I A 2	UPLAND	166		166							0.03		
3	B	5A	420.16	420.18	U	N/A	I C 1	UPLAND	80		80							0.02		
3	B	5A	420.18	420.22	U	N/A	I A 2	UPLAND	235		235							0.04		
3	B	5A	420.22	420.23	U	N/A	I C 1	UPLAND	29		29							0.01		
3	B	5A	420.23	420.28	U	N/A	I A 2	UPLAND	268		268							0.05		
3	B	5A	420.28	420.29	U	N/A	I C 1	UPLAND	89		89							0.02		
3	B	5A	420.29	420.43	U	N/A	I A 2	UPLAND	707		707							0.13		
3	B	5A	420.43	420.46	U	N/A	I A 2	UPLAND	163		163							0.03		
3	B	5A	420.46	420.48	U	N/A	I A 2	UPLAND	96		96							0.02		
3	B	5A	420.48	420.50	U	N/A	I A 2	UPLAND	102		102							0.02		
3	B	5A	420.50	420.51	U	N/A	I A 2	UPLAND	87		87							0.02		
3	B	5A	420.51	420.52	U	N/A	II C 2	UPLAND	65		65							0.01		
3	B	5A	420.52	420.54	U	N/A	I A 2	UPLAND	57		57							0.01		
3	B	5A	420.54	420.54	U	N/A	II C 2	UPLAND	37		37							0.01		
3	B	5A	420.54	420.55	U	N/A	I A 2	UPLAND	57		57							0.01		
3	B	5A	420.55	420.58	U	N/A	II C 2	UPLAND	159		159							0.03		
3	B	5A	420.58	420.66	U	N/A	I A 2	UPLAND	385		385							0.07		
3	B	5A	420.66	420.74	U	N/A	I C 2	UPLAND	463		463							0.09		
3	B	5A	420.74	420.75	U	N/A	I A 2	UPLAND	37		37							0.01		
3	B	5A	420.75	420.77	U	N/A	I C 2	UPLAND	105		105							0.02		
3	B	5A	420.77	420.78	U	N/A	I A 2	UPLAND	41		41							0.01		
3	B	5A	420.78	420.90	U	N/A	I C 2	UPLAND	647		647							0.12		
3	B	5A	420.90	420.93	U	N/A	I A 2	UPLAND	175		175							0.03		
3	B	5A	420.93	420.96	U	N/A	I C 2	UPLAND	120		120							0.02		
3	B	5A	420.96	420.98	U	N/A	I A 2	UPLAND	95		95							0.02		
3	B	5A	420.98	421.07	U	N/A	I A 2	UPLAND	500		500							0.09		
3	B	5A	421.07	421.13	U	N/A	I C 2	UPLAND	339		339							0.06		
3	B	5A	421.13	421.16	U	N/A	I A 2	UPLAND	151		151							0.03		
3	B	5A	421.16	421.24	U	N/A	I C 2	UPLAND	424		424							0.08		
3	B	5A	421.24	421.74	U	N/A	I A 2	UPLAND	2642		2642							0.50		
3	B	5A	421.74	421.75	U	N/A	I A 2	UPLAND	49		49							0.01		
3	B	5A	421.75	421.87	U	N/A	I C 2	UPLAND	625		625							0.12		
3	B	5A	421.87	421.93	U	N/A	I A 2	UPLAND	332		332							0.06		
3	B	5A	421.93	421.96	U	N/A	I C 2	UPLAND	156		156							0.03		
3	B	5A	421.96	422.00	U	N/A	I B 1	UPLAND	206		206							0.04		

SPREAD	SECTION	ROW MODE	FROM MP	TO MP	NWI CODE	HGM CLASS	VIERECK	DESCRIPTION	LINEAR FEET	WETLAND FEET	UPLAND FEET	DISTURBED FEET	Comments	Mode 1 - Ice Workpad (miles)	Mode 2 - Frost Pack (miles)	Mode 3 - Timber Mats	Mode 4 - Granular Workpad	Mode 5A - Grade	Mode 5B - Mountain Grade	Stream & Flood Plain Crossings
3	B	5A	422.00	422.04	U	N/A	I C 2, I C 1	UPLAND	203		203							0.04		
3	B	5A	422.04	422.09	U	N/A	I A 2	UPLAND	271		271							0.05		
3	B	5A	422.09	422.16	U	N/A	I A 2	UPLAND	349		349							0.07		
3	B	5A	422.16	422.20	U	N/A	I C 2, I C 1	UPLAND	199		199							0.04		
3	B	5A	422.20	422.21	U	N/A	I A 2	UPLAND	73		73							0.01		
3	B	5A	422.21	422.28	U	N/A	I C 2, I C 1	UPLAND	354		354							0.07		
3	B	5A	422.28	422.60	U	N/A	I A 2, I C 2	UPLAND	1690		1690							0.32		
3	B	5A	422.60	422.64	U	N/A	I A 2	UPLAND	215		215							0.04		
3	B	5A	422.64	422.85	U	N/A	I A 2	UPLAND	1143		1143							0.22		
3	B	5A	422.85	422.96	U	N/A	I A 1	UPLAND	561		561							0.11		
3	B	5A	422.96	423.01	U	N/A	I A 2	UPLAND	247		247							0.05		
3	B	5A	423.01	423.12	U	N/A	I A 1	UPLAND	600		600							0.11		
3	B	5A	423.12	423.17	U	N/A	I A 2	UPLAND	282		282							0.05		
3	B	5A	423.17	423.30	U	N/A	I A 2	UPLAND	678		678							0.13		
3	B	5A	423.30	423.38	U	N/A	I A 2	UPLAND	421		421							0.08		
3	B	5A	423.38	423.45	U	N/A	I A 1	UPLAND	365		365							0.07		
3	B	5A	423.45	423.92	U	N/A	I A 2	UPLAND	2489		2489							0.47		
3	B	5A	423.92	423.98	U	N/A	I C 2	UPLAND	323		323							0.06		
3	B	5A	423.98	424.00	U	N/A	I A 2	UPLAND	58		58							0.01		
3	B	5A	424.00	424.07	U	N/A	I C 2	UPLAND	406		406							0.08		
3	B	5A	424.07	424.08	U	N/A	I A 2	UPLAND	52		52							0.01		
3	B	5A	424.08	424.09	U	N/A	I C 2	UPLAND	36		36							0.01		
3	B	5A	424.09	424.10	U	N/A	I A 2	UPLAND	53		53							0.01		
3	B	5A	424.10	424.16	U	N/A	I C 2	UPLAND	299		299							0.06		
3	B	5A	424.16	424.17	U	N/A	I A 2	UPLAND	100		100							0.02		
3	B	5A	424.17	424.19	U	N/A	I C 2	UPLAND	96		96							0.02		
3	B	5A	424.19	424.44	U	N/A	I A 2	UPLAND	1288		1288							0.24		
3	B	5A	424.44	424.54	U	N/A	I C 2	UPLAND	552		552							0.10		
3	B	5A	424.54	424.59	U	N/A	I A 2	UPLAND	282		282							0.05		
3	B	5A	424.59	424.75	U	N/A	I A 2	UPLAND	807		807							0.15		
3	B	5A	424.75	425.00	U	N/A	I A 2	UPLAND	1351		1351							0.26		
3	B	5A	425.00	425.22	U	N/A	I A 2	UPLAND	1162		1162							0.22		
3	B	5A	425.22	425.26	U	N/A	I A 2	UPLAND	202		202							0.04		
3	B	5A	425.26	425.31	U	N/A	I C 1	UPLAND	260		260							0.05		
3	B	5A	425.31	425.39	U	N/A	I A 2	UPLAND	393		393							0.07		
3	B	5A	425.39	426.30	U	N/A	I C 1	UPLAND	4837		4837							0.92		
3	B	5A	426.30	426.45	U	N/A	I C 2	UPLAND	811		811							0.15		
3	B	5A	426.45	426.51	U	N/A	I A 2	UPLAND	304		304							0.06		
3	B	5A	426.51	426.60	PSS4B	FLAT - ORGANIC	II A 1	WETLAND	448	448								0.08		
3	B	5A	426.60	426.61	PSS1/FO4B	SLOPE	II C 2, I A 3	WETLAND	42	42								0.01		
3	B	5A	426.61	426.69	PSS4B	FLAT - ORGANIC	II A 1	WETLAND	455	455								0.09		
3	B	5A	426.69	426.78	U	N/A	I A 2	UPLAND	465		465							0.09		
3	B	5A	426.78	426.79	U	N/A	I C 2	UPLAND	57		57							0.01		
3	B	5A	426.79	426.80	U	N/A	I A 2	UPLAND	29		29							0.01		
3	B	5A	426.80	426.88	U	N/A	I C 2	UPLAND	431		431							0.08		
3	B	5A	426.88	427.04	U	N/A	I A 2	UPLAND	883		883							0.17		
3	B	5A	427.04	427.13	U	N/A	II B 2	UPLAND	443		443							0.08		
3	B	5A	427.13	427.19	U	N/A	I C 2	UPLAND	345		345							0.07		
3	B	5A	427.19	427.26	U	N/A	II B 2	UPLAND	336		336							0.06		
3	B	5A	427.26	427.29	U	N/A	I C 2	UPLAND	159		159							0.03		
3	B	5A	427.29	427.33	U	N/A	II B 2	UPLAND	204		204							0.04		
3	B	5A	427.33	427.36	U	N/A	I A 2	UPLAND	162		162							0.03		
3	B	5A	427.36	427.45	U	N/A	II B 2	UPLAND	500		500							0.09		
3	B	5A	427.45	427.48	U	N/A	I A 2	UPLAND	170		170							0.03		
3	B	5A	427.48	427.95	U	N/A	II B 2	UPLAND	2483		2483							0.47		
3	B	5A	427.95	427.98	U	N/A	I B 2	UPLAND	123		123							0.02		
3	B	4	427.98	428.04	U	N/A	I B 2	UPLAND	326		326						0.06			
3	B	4	428.04	428.37	U	N/A	II B 2	UPLAND	1739		1739						0.33			
3	B	4	428.37	428.49	U	N/A	II C 2	UPLAND	657		657						0.12			
3	B	4	428.49	428.53	U	N/A	II B 2	UPLAND	183		183						0.03			
3	B	4	428.53	428.84	U	N/A	II C 2	UPLAND	1630		1630						0.31			
3	B	4	428.84	428.89	U	N/A	II B 2	UPLAND	274		274						0.05			
3	B	4	428.89	428.91	U	N/A	II C 2	UPLAND	133		133						0.03			
3	B	4	428.91	428.93	U	N/A	II A 2, II B 2	UPLAND	78		78						0.01			
3	B	4	428.93	428.96	U	N/A	II A 2, II C 2	UPLAND	187		187						0.04			
3	B	4	428.96	428.99	PSS1B	FLAT - ORGANIC	II B 2	WETLAND	134	134							0.03			
3	B	4	428.99	429.02	U	N/A	II C 2	UPLAND	177		177						0.03			
3	B	5A	429.02	429.04	U	N/A	II C 2	UPLAND	80		80							0.02		
3	B	5A	429.04	429.13	U	N/A	II B 2, II C 2	UPLAND	465		465							0.09		
3	B	5A	429.13	429.17	U	N/A	I C 2	UPLAND	240		240							0.05		
3	B	5A	429.17	429.19	U	N/A	II B 2, II C 2	UPLAND	112		112							0.02		
3	B	5A	429.19	429.24	U	N/A	I A 3	UPLAND	265		265							0.05		

SPREAD	SECTION	ROW MODE	FROM MP	TO MP	NWI CODE	HGM CLASS	VIERECK	DESCRIPTION	LINEAR FEET	WETLAND FEET	UPLAND FEET	DISTURBED FEET	Comments	Mode 1 - Ice Workpad (miles)	Mode 2 - Frost Pack (miles)	Mode 3 - Timber Mats	Mode 4 - Granular Workpad	Mode 5A - Grade	Mode 5B - Mountain Grade	Stream & Flood Plain Crossings
3	B	5A	429.24	429.78	U	N/A	II B 2, II C 2	UPLAND	2816		2816							0.53		
3	B	5A	429.78	429.79	U	N/A	I A 2	UPLAND	60		60							0.01		
3	B	5A	429.79	429.89	U	N/A	II B 2, II C 2	UPLAND	517		517							0.10		
3	B	5A	429.89	429.89	U	N/A	I C 2	UPLAND	16		16							0.00		
3	B	5A	429.89	429.91	U	N/A	II B 2, II C 2	UPLAND	135		135							0.03		
3	B	5A	429.91	429.99	U	N/A	I C 2	UPLAND	386		386							0.07		
3	B	5A	429.99	429.99	PSS1B	FLAT - ORGANIC	II D 2	WETLAND	37	37								0.01		
3	B	4	429.99	430.02	PSS1B	FLAT - ORGANIC	II D 2	WETLAND	143	143							0.03			
3	B	4	430.02	430.03	PSS1/EM1B	DEPRESSIONAL	II B 2	WETLAND	45	45							0.01			
3	B	4	430.03	430.06	PSS1B	FLAT - ORGANIC	II D 2	WETLAND	180	180							0.03			
3	B	4	430.06	430.08	PSS1/FO4B	FLAT - ORGANIC	I A 3	WETLAND	86	86							0.02			
3	B	4	430.08	430.13	PSS1B	FLAT - ORGANIC	II D 2	WETLAND	286	286							0.05			
3	B	4	430.13	430.15	PSS1/FO4B	FLAT - ORGANIC	I A 3	WETLAND	71	71							0.01			
3	B	4	430.15	430.16	PEM1/SS1B	DEPRESSIONAL	III A 2, II D 2	WETLAND	58	58							0.01			
3	B	4	430.16	430.17	PSS1/EM1B	FLAT - ORGANIC	II C 2, III A 3	WETLAND	35	35							0.01			
3	B	4	430.17	430.17	PSS1/FO4B	FLAT - ORGANIC	I A 3	WETLAND	36	36							0.01			
3	B	4	430.17	430.17	PSS1/EM1B	FLAT - ORGANIC	II C 2, III A 3	WETLAND	3	3							0.00			
3	B	4	430.17	430.18	PEM1/SS1B	DEPRESSIONAL	III A 2, II D 2	WETLAND	22	22							0.00			
3	B	4	430.18	430.21	PSS1/EM1B	FLAT - ORGANIC	II C 2, III A 3	WETLAND	177	177							0.03			
3	B	4	430.21	430.22	PEM1/SS1B	DEPRESSIONAL	III A 2, II D 2	WETLAND	65	65							0.01			
3	B	4	430.22	430.27	PEM1/SS1B	DEPRESSIONAL	III A 2, II D 2	WETLAND	255	255							0.05			
3	B	4	430.27	430.38	PSS1/EM1B	FLAT - ORGANIC	II C 2, III A 3	WETLAND	590	590							0.11			
3	B	4	430.38	430.41	PSS1/EM1B	FLAT - ORGANIC	II C 2, III A 3	WETLAND	154	154							0.03			
3	C	4	430.41	430.42	U	N/A	II B 2	UPLAND	27		27						0.01			
3	C	4	430.42	430.43	PSS1/EM1B	FLAT - ORGANIC	II C 2, III A 3	WETLAND	72	72							0.01			
3	C	4	430.43	430.44	U	N/A	I C 2	UPLAND	65		65						0.01			
3	C	WB-W	430.44	430.45	U	N/A	I C 2	UPLAND	28		28									0.01
3	C	WB-W	430.45	430.46	R2UBH	RIVERINE	NONE	WETLAND	80	80										0.02
3	C	WB-W	430.46	430.47	U	N/A	I C 2	UPLAND	42		42									0.01
3	C	4	430.47	430.49	U	N/A	I C 2	UPLAND	83		83						0.02			
3	C	4	430.49	430.50	U	N/A	II B 2	UPLAND	81		81						0.02			
3	C	4	430.50	430.55	PSS1/EM1B	FLAT - ORGANIC	II B 2	WETLAND	231	231							0.04			
3	C	4	430.55	430.56	PEM1/SS1B	DEPRESSIONAL	III A 2, II C 2	WETLAND	97	97							0.02			
3	C	4	430.56	430.58	PSS1/EM1B	FLAT - ORGANIC	II B 2	WETLAND	88	88							0.02			
3	C	4	430.58	430.58	PEM1/SS1B	DEPRESSIONAL	III A 3, II C 2	WETLAND	18	18							0.00			
3	C	4	430.58	430.60	PSS1/EM1B	FLAT - ORGANIC	II B 2	WETLAND	103	103							0.02			
3	C	4	430.60	430.61	PEM1/SS1C	DEPRESSIONAL	III A 2, II C 2	WETLAND	33	33							0.01			
3	C	4	430.61	430.61	U	N/A	II B 2	UPLAND	16		16						0.00			
3	C	4	430.61	430.67	PSS1/EM1B	FLAT - ORGANIC	II B 2	WETLAND	300	300							0.06			
3	C	4	430.67	430.69	U	N/A	II B 2	UPLAND	112		112						0.02			
3	C	4	430.69	430.72	PSS1/EM1B	FLAT - ORGANIC	II B 2	WETLAND	164	164							0.03			
3	C	4	430.72	430.74	U	N/A	II B 2	UPLAND	106		106						0.02			
3	C	4	430.74	430.76	PSS1/EM1B	FLAT - ORGANIC	II B 2	WETLAND	97	97							0.02			
3	C	4	430.76	430.78	U	N/A	II B 2	UPLAND	76		76						0.01			
3	C	4	430.78	430.79	PSS1/EM1B	FLAT - ORGANIC	II B 2	WETLAND	81	81							0.02			
3	C	4	430.79	430.81	U	N/A	II B 2	UPLAND	77		77						0.01			
3	C	4	430.81	430.82	PSS1/EM1B	FLAT - ORGANIC	II B 2	WETLAND	78	78							0.01			
3	C	4	430.82	430.87	U	N/A	II B 2	UPLAND	279		279						0.05			
3	C	4	430.87	430.93	PSS1/EM1B	FLAT - ORGANIC	II B 2	WETLAND	276	276							0.05			
3	C	4	430.93	430.95	U	N/A	II B 2	UPLAND	104		104						0.02			
3	C	4	430.95	430.97	PSS1/EM1B	FLAT - ORGANIC	II B 2	WETLAND	135	135							0.03			
3	C	4	430.97	431.04	U	N/A	II B 2	UPLAND	381		381						0.07			
3	C	4	431.04	431.20	PSS1/EM1C	DEPRESSIONAL	II C 2, III A 2	WETLAND	826	826							0.16			
3	C	4	431.20	431.23	U	N/A	II B 2	UPLAND	143		143						0.03			
3	C	4	431.23	431.28	PSS1B	FLAT - ORGANIC	II C 2	WETLAND	275	275							0.05			
3	C	4	431.28	431.29	U	N/A	II B 2	UPLAND	62		62						0.01			
3	C	4	431.29	431.30	PSS1B	FLAT - ORGANIC	II C 2	WETLAND	75	75							0.01			
3	C	4	431.30	431.36	U	N/A	I A 2	UPLAND	290		290						0.05			
3	C	4	431.36	431.63	PSS4/FO4B	FLAT - ORGANIC	II A 2, I A 2	WETLAND	1418	1418							0.27			
3	C	4	431.63	431.64	PSS1/EM1B	DEPRESSIONAL	II C 2, III A 2	WETLAND	41	41							0.01			
3	C	4	431.64	431.65	PEM1/SS1B	DEPRESSIONAL	III A 2, II D 2	WETLAND	54	54							0.01			
3	C	4	431.65	431.66	PSS1/EM1B	DEPRESSIONAL	II C 2, III A 2	WETLAND	50	50							0.01			
3	C	4	431.66	431.66	PSS4/FO4B	FLAT - ORGANIC	II A 2, I A 2	WETLAND	33	33							0.01			
3	C	4	431.66	431.67	PSS1/EM1B	DEPRESSIONAL	II C 2, III A 2	WETLAND	29	29							0.01			
3	C	4	431.67	431.76	PSS4/FO4B	FLAT - ORGANIC	II A 2, I A 2	WETLAND	483	483							0.09			
3	C	4	431.76	431.96	U	N/A	I C 2	UPLAND	1071		1071						0.20			
3	C	4	431.96	432.03	U	N/A	I B 2, II B 2	UPLAND	351		351						0.07			
3	C	4	432.03	432.05	U	N/A	I A 2	UPLAND	129		129						0.02			
3	C	4	432.05	432.08	U	N/A	I B 2, II B 2	UPLAND	167		167						0.03			
3	C	4	432.08	432.09	PUBHb	DEPRESSIONAL	NONE	WETLAND	5	5							0.00			
3	C	WB-W	432.09	432.10	PUBHb	DEPRESSIONAL	NONE	WETLAND	56	56										0.01
3	C	WB-W	432.10	432.10	U	N/A	I B 2, II B 2	UPLAND	4		4									0.00

SPREAD	SECTION	ROW MODE	FROM MP	TO MP	NWI CODE	HGM CLASS	VIERECK	DESCRIPTION	LINEAR FEET	WETLAND FEET	UPLAND FEET	DISTURBED FEET	Comments	Mode 1 - Ice Workpad (miles)	Mode 2 - Frost Pack (miles)	Mode 3 - Timber Mats	Mode 4 - Granular Workpad	Mode 5A - Grade	Mode 5B - Mountain Grade	Stream & Flood Plain Crossings
3	C	4	432.10	432.25	U	N/A	I B 2, II B 2	UPLAND	829		829						0.16			
3	C	4	432.25	432.30	PEM1/SS1B	DEPRESSIONAL	III A 2, II C 2	WETLAND	232	232							0.04			
3	C	4	432.30	432.37	U	N/A	I B 2, II B 2	UPLAND	362		362						0.07			
3	C	4	432.37	432.41	PEM1B	DEPRESSIONAL	III A 2	WETLAND	239	239							0.05			
3	C	4	432.41	432.44	U	N/A	I B 2, II B 2	UPLAND	135		135						0.03			
3	C	4	432.44	432.45	PSS1B	DEPRESSIONAL	II B 2	WETLAND	55	55							0.01			
3	C	4	432.45	432.57	U	N/A	I B 2, II B 2	UPLAND	638		638						0.12			
3	C	WB-W	432.57	432.58	U	N/A	I B 2, II B 2	UPLAND	60		60									0.01
3	C	4	432.58	432.62	U	N/A	I B 2, II B 2	UPLAND	214		214						0.04			
3	C	4	432.62	432.67	U	N/A	I C 1	UPLAND	288		288						0.05			
3	C	4	432.67	432.69	U	N/A	I B 2, II B 2	UPLAND	81		81						0.02			
3	C	4	432.69	432.75	U	N/A	I C 1	UPLAND	300		300						0.06			
3	C	4	432.75	432.76	U	N/A	I C 2	UPLAND	47		47						0.01			
3	C	WB-W	432.76	432.76	U	N/A	I C 2	UPLAND	19		19									0.00
3	C	WB-W	432.76	432.77	U	N/A	II B 2	UPLAND	57		57									0.01
3	C	WB-W	432.77	432.77	R2UBH	RIVERINE	NONE	WETLAND	14	14										0.00
3	C	4	432.77	432.78	R2UBH	RIVERINE	NONE	WETLAND	28	28							0.01			
3	C	4	432.78	432.79	U	N/A	II B 2	UPLAND	54		54						0.01			
3	C	4	432.79	432.80	U	N/A	I B 2	UPLAND	75		75						0.01			
3	C	4	432.80	432.81	PEM1C	DEPRESSIONAL	III A 3	WETLAND	39	39							0.01			
3	C	4	432.81	432.83	U	N/A	I B 2	UPLAND	123		123						0.02			
3	C	4	432.83	432.84	PEM1/SS1C	DEPRESSIONAL	III A 2, II D 2	WETLAND	15	15							0.00			
3	C	4	432.84	432.86	U	N/A	I B 2	UPLAND	122		122						0.02			
3	C	4	432.86	432.90	U	N/A	I B 1	UPLAND	205		205						0.04			
3	C	4	432.90	432.96	U	N/A	I B 2	UPLAND	323		323						0.06			
3	C	4	432.96	432.98	PSS4/FO1B	FLAT - ORGANIC	II A 2, I C 2	WETLAND	101	101							0.02			
3	C	4	432.98	432.99	PFO4/1B	FLAT - ORGANIC	I C 2	WETLAND	41	41							0.01			
3	C	4	432.99	432.99	PSS4/FO1B	FLAT - ORGANIC	II A 2, I C 2	WETLAND	25	25							0.00			
3	C	4	432.99	433.01	PSS4/1B	FLAT - ORGANIC	II A 2	WETLAND	114	114							0.02			
3	C	4	433.01	433.06	U	N/A	I A 2	UPLAND	233		233						0.04			
3	C	4	433.06	433.07	PFO4/1B	FLAT - ORGANIC	I C 2	WETLAND	79	79							0.01			
3	C	4	433.07	433.08	PSS1/4B	FLAT - ORGANIC	II A 2, II A 3	WETLAND	52	52							0.01			
3	C	4	433.08	433.09	PSS1C	FLAT - ORGANIC	II B 2, II C 2	WETLAND	44	44							0.01			
3	C	4	433.09	433.16	PSS1/EM1B	FLAT - ORGANIC	II C 1, III A 2	WETLAND	350	350							0.07			
3	C	4	433.16	433.16	PEM1/SS1B	DEPRESSIONAL	III A 2	WETLAND	28	28							0.01			
3	C	4	433.16	433.25	PSS1/EM1B	FLAT - ORGANIC	II C 1, III A 2	WETLAND	486	486							0.09			
3	C	4	433.25	433.27	PEM1/SS1B	DEPRESSIONAL	III A 2	WETLAND	83	83							0.02			
3	C	4	433.27	433.28	PSS1/EM1B	FLAT - ORGANIC	II C 1, III A 2	WETLAND	70	70							0.01			
3	C	4	433.28	433.29	PEM1/SS1B	DEPRESSIONAL	III A 2	WETLAND	41	41							0.01			
3	C	4	433.29	433.32	PSS1/EM1B	FLAT - ORGANIC	II C 1, III A 2	WETLAND	172	172							0.03			
3	C	4	433.32	433.33	PFO4/SS4B	FLAT - ORGANIC	I A 2	WETLAND	33	33							0.01			
3	C	4	433.33	433.37	PSS1/EM1B	FLAT - ORGANIC	II C 1, III A 2	WETLAND	229	229							0.04			
3	C	4	433.37	433.41	PEM1/SS1B	DEPRESSIONAL	III A 2	WETLAND	175	175							0.03			
3	C	4	433.41	433.41	PSS1/4B	FLAT - ORGANIC	II A 3, II C 1	WETLAND	47	47							0.01			
3	C	4	433.41	433.44	PSS1B	FLAT - ORGANIC	II C 1	WETLAND	144	144							0.03			
3	C	4	433.44	433.45	PEM1/SS1B	DEPRESSIONAL	III A 2	WETLAND	49	49							0.01			
3	C	4	433.45	433.47	PSS1B	FLAT - ORGANIC	II C 1	WETLAND	78	78							0.01			
3	C	4	433.47	433.50	PSS1/4B	FLAT - ORGANIC	II A 3, II C 1	WETLAND	202	202							0.04			
3	C	4	433.50	433.51	PSS1B	FLAT - ORGANIC	II C 1	WETLAND	43	43							0.01			
3	C	4	433.51	433.53	PEM1/SS1E	SLOPE	III A 3, II C 2	WETLAND	89	89							0.02			
3	C	4	433.53	433.55	PSS1B	FLAT - ORGANIC	II C 1	WETLAND	130	130							0.02			
3	C	4	433.55	433.61	PFO4/SS4B	FLAT - ORGANIC	I A 2, II A 2	WETLAND	301	301							0.06			
3	C	4	433.61	433.62	PSS1/EM1B	FLAT - ORGANIC	II C 1, III A 2	WETLAND	44	44							0.01			
3	C	4	433.62	433.67	PFO4/SS4B	FLAT - ORGANIC	I A 2, II A 2	WETLAND	291	291							0.06			
3	C	4	433.67	433.70	PSS1/EM1B	SLOPE	II C 1, III A 2	WETLAND	136	136							0.03			
3	C	4	433.70	433.75	PFO4/SS4B	FLAT - ORGANIC	I A 2, II A 2	WETLAND	249	249							0.05			
3	C	4	433.75	433.75	PEM1/SS1B	DEPRESSIONAL	III A 2	WETLAND	39	39							0.01			
3	C	4	433.75	433.83	PFO4/SS4B	FLAT - ORGANIC	I A 2, II A 2	WETLAND	411	411							0.08			
3	C	4	433.83	433.84	PSS1/EM1B	FLAT - ORGANIC	II C 1, III A 2	WETLAND	26	26							0.00			
3	C	4	433.84	433.84	PFO4/SS4B	FLAT - ORGANIC	I A 2, II A 2	WETLAND	43	43							0.01			
3	C	4	433.84	433.85	PSS1/EM1B	SLOPE	II C 1, III A 2	WETLAND	27	27							0.01			
3	C	4	433.85	433.87	PFO4/SS4B	FLAT - ORGANIC	I A 2, II A 2	WETLAND	120	120							0.02			
3	C	4	433.87	433.90	PSS1/EM1B	SLOPE	II C 1, III A 2	WETLAND	168	168							0.03			
3	C	4	433.90	433.92	PSS1/FO4B	FLAT - ORGANIC	I A 3	WETLAND	101	101							0.02			
3	C	4	433.92	434.01	PFO4/SS4B	FLAT - ORGANIC	I A 2, II A 2	WETLAND	449	449							0.09			
3	C	4	434.01	434.04	PSS1/EM1B	SLOPE	II C 1, III A 2	WETLAND	168	168							0.03			
3	C	4	434.04	434.15	PSS1/EM1B	FLAT - ORGANIC	II C 1, III A 2	WETLAND	567	567							0.11			
3	C	4	434.15	434.27	PSS1/FO4B	FLAT - ORGANIC	II C 1, I A 3	WETLAND	643	643							0.12			
3	C	4	434.27	434.29	PFO4/SS4B	FLAT - ORGANIC	I A 2, II A 2	WETLAND	87	87							0.02			
3	C	4	434.29	434.33	PSS1B	FLAT - ORGANIC	II C 1, II A 3	WETLAND	217	217							0.04			
3	C	4	434.33	434.35	PFO4/SS1B	FLAT - ORGANIC	I A 2, II C 1	WETLAND	113	113							0.02			
3	C	2	434.35	434.45	PFO4/SS1B	FLAT - ORGANIC	I A 2, II C 1	WETLAND	533	533					0.10					

SPREAD	SECTION	ROW MODE	FROM MP	TO MP	NWI CODE	HGM CLASS	VIERECK	DESCRIPTION	LINEAR FEET	WETLAND FEET	UPLAND FEET	DISTURBED FEET	Comments	Mode 1 - Ice Workpad (miles)	Mode 2 - Frost Pack (miles)	Mode 3 - Timber Mats	Mode 4 - Granular Workpad	Mode 5A - Grade	Mode 5B - Mountain Grade	Stream & Flood Plain Crossings
3	C	2	434.45	434.48	U	N/A	I C 2	UPLAND	134		134				0.03					
3	C	2	434.48	434.48	PSS1/FO1B	FLAT - ORGANIC	II B 2, I C 3	WETLAND	46	46					0.01					
3	C	2	434.48	434.51	U	N/A	I C 2	UPLAND	157		157				0.03					
3	C	2	434.51	434.57	U	N/A	I A 2	UPLAND	300		300				0.06					
3	C	2	434.57	434.61	PFO4/SS4B	FLAT - ORGANIC	I A 2	WETLAND	185	185					0.04					
3	C	2	434.61	434.61	U	N/A	I A 2	UPLAND	26		26				0.00					
3	C	2	434.61	434.65	PFO4/SS4B	FLAT - ORGANIC	I A 2	WETLAND	190	190					0.04					
3	C	2	434.65	434.66	U	N/A	I A 2	UPLAND	58		58				0.01					
3	C	2	434.66	434.67	U	N/A	I C 2	UPLAND	58		58				0.01					
3	C	2	434.67	434.67	PSS1B	SLOPE	II B 2	WETLAND	30	30					0.01					
3	C	2	434.67	434.69	U	N/A	I C 2	UPLAND	90		90				0.02					
3	C	2	434.69	434.70	PSS1B	SLOPE	II B 2	WETLAND	29	29					0.01					
3	C	2	434.70	434.71	U	N/A	I C 2	UPLAND	61		61				0.01					
3	C	2	434.71	434.73	U	N/A	I A 2, I A 3	UPLAND	91		91				0.02					
3	C	2	434.73	434.80	PFO4/SS4B	FLAT - ORGANIC	I A 2, II A 2	WETLAND	391	391					0.07					
3	C	2	434.80	434.80	PSS1/FO4B	FLAT - ORGANIC	I A 3	WETLAND	7	7					0.00					
3	C	2	434.80	434.81	PSS1B	SLOPE	II B 1	WETLAND	35	35					0.01					
3	C	2	434.81	434.81	U	N/A	I C 2	UPLAND	39		39				0.01					
3	C	2	434.81	434.91	PFO4/SS4B	FLAT - ORGANIC	I A 2, II A 2	WETLAND	491	491					0.09					
3	C	2	434.91	434.93	PFO4/SS1B	FLAT - ORGANIC	I A 2, II A 2	WETLAND	141	141					0.03					
3	C	2	434.93	434.95	U	N/A	I A 2	UPLAND	67		67				0.01					
3	C	2	434.95	434.96	PFO4/SS1B	FLAT - ORGANIC	I A 2, II A 2	WETLAND	92	92					0.02					
3	C	2	434.96	435.00	U	N/A	I A 2	UPLAND	165		165				0.03					
3	C	2	435.00	435.04	PFO4/SS4B	FLAT - ORGANIC	I A 2, II A 2	WETLAND	213	213					0.04					
3	C	2	435.04	435.05	U	N/A	I A 2	UPLAND	52		52				0.01					
3	C	2	435.05	435.06	PFO4/SS4B	FLAT - ORGANIC	I A 2, II A 2	WETLAND	66	66					0.01					
3	C	2	435.06	435.07	U	N/A	I A 2	UPLAND	41		41				0.01					
3	C	2	435.07	435.15	PFO4/SS4B	FLAT - ORGANIC	I A 2, II A 2	WETLAND	422	422					0.08					
3	C	2	435.15	435.15	PSS1B	SLOPE	II B 2, II C 1	WETLAND	21	21					0.00					
3	C	2	435.15	435.18	PFO4/SS4B	FLAT - ORGANIC	I A 2, II A 2	WETLAND	169	169					0.03					
3	C	2	435.18	435.21	PFO4/SS1B	FLAT - ORGANIC	I A 2, II C 2	WETLAND	140	140					0.03					
3	C	2	435.21	435.29	U	N/A	I C 2	UPLAND	427		427				0.08					
3	C	2	435.29	435.30	PSS1B	SLOPE	III A 2	WETLAND	34	34					0.01					
3	C	2	435.30	435.33	U	N/A	I C 2	UPLAND	203		203				0.04					
3	C	2	435.33	435.46	U	N/A	I C 1	UPLAND	658		658				0.12					
3	C	2	435.46	435.50	PSS1/4B	FLAT - ORGANIC	II A 2	WETLAND	237	237					0.04					
3	C	2	435.50	435.53	U	N/A	I C 1	UPLAND	116		116				0.02					
3	C	2	435.53	435.55	PSS1/4B	FLAT - ORGANIC	II A 2	WETLAND	105	105					0.02					
3	C	2	435.55	435.61	U	N/A	I C 1	UPLAND	347		347				0.07					
3	C	2	435.61	435.64	U	N/A	I C 2	UPLAND	157		157				0.03					
3	C	2	435.64	435.68	U	N/A	I C 1	UPLAND	203		203				0.04					
3	C	2	435.68	435.68	U	N/A	I C 2	UPLAND	21		21				0.00					
3	C	2	435.68	436.25	PFO4/SS4B	FLAT - ORGANIC	I A 2, II C 2	WETLAND	3002	3002					0.57					
3	C	2	436.25	436.28	PSS4/FO4B	FLAT - ORGANIC	II A 2, I A 2	WETLAND	157	157					0.03					
3	C	2	436.28	436.29	PFO4/SS4B	FLAT - ORGANIC	I A 2, II A 2	WETLAND	66	66					0.01					
3	C	2	436.29	436.37	U	N/A	I C 2	UPLAND	388		388				0.07					
3	C	2	436.37	436.39	PFO4/SS4B	FLAT - ORGANIC	I A 2, II A 2	WETLAND	112	112					0.02					
3	C	2	436.39	436.41	U	N/A	I A 2	UPLAND	129		129				0.02					
3	C	2	436.41	436.59	PFO4/SS4B	FLAT - ORGANIC	I A 2, II A 2	WETLAND	919	919					0.17					
3	C	2	436.59	436.60	PSS1/FO4B	FLAT - ORGANIC	I A 3, II B 2	WETLAND	79	79					0.01					
3	C	2	436.60	436.64	U	N/A	I A 2	UPLAND	179		179				0.03					
3	C	2	436.64	436.67	PFO4/SS4B	FLAT - ORGANIC	I A 2, II A 2	WETLAND	152	152					0.03					
3	C	2	436.67	436.69	U	N/A	I A 2, II A 2	UPLAND	121		121				0.02					
3	C	2	436.69	436.69	PSS1B	FLAT - ORGANIC	II B 2	WETLAND	28	28					0.01					
3	C	2	436.69	436.70	U	N/A	I A 2, II A 2	UPLAND	51		51				0.01					
3	C	2	436.70	436.74	PFO4/SS4B	FLAT - ORGANIC	I A 2, II A 2	WETLAND	191	191					0.04					
3	C	2	436.74	436.80	U	N/A	I A 2	UPLAND	320		320				0.06					
3	C	2	436.80	436.84	PFO4/SS4B	FLAT - ORGANIC	I A 2, II A 2	WETLAND	187	187					0.04					
3	C	2	436.84	436.85	PFO4/SS4B	FLAT - ORGANIC	I A 2, II A 2	WETLAND	70	70					0.01					
3	C	2	436.85	437.09	PFO4/SS4B	FLAT - ORGANIC	I A 2, II A 2	WETLAND	1291	1291					0.24					
3	C	2	437.09	437.10	U	N/A	I A 2	UPLAND	41		41				0.01					
3	C	2	437.10	437.34	PFO4/SS4B	FLAT - ORGANIC	I A 2, II A 2	WETLAND	1255	1255					0.24					
3	C	2	437.34	437.35	PSS4/1B	FLAT - ORGANIC	II A 2	WETLAND	42	42					0.01					
3	C	2	437.35	437.49	PFO4/SS1B	FLAT - ORGANIC	I A 2, II C 2	WETLAND	750	750					0.14					
3	C	2	437.49	437.55	PFO4/SS1B	FLAT - ORGANIC	I A 2, II C 2	WETLAND	326	326					0.06					
3	C	2	437.55	437.59	U	N/A	I A 2, II A 2	UPLAND	196		196				0.04					
3	C	2	437.59	437.60	PFO4/SS1B	FLAT - ORGANIC	I A 2, II C 2	WETLAND	79	79					0.01					
3	C	2	437.60	437.61	U	N/A	I A 2, II A 2	UPLAND	46		46				0.01					
3	C	2	437.61	437.77	PFO4/SS1B	FLAT - ORGANIC	I A 2, II C 2	WETLAND	859	859					0.16					
3	C	4	437.77	437.81	PFO4/SS1B	FLAT - ORGANIC	I A 2, II C 2	WETLAND	215	215							0.04			
3	C	4	437.81	437.82	PSS1/EM1B	DEPRESSIONAL	II C 2, III A 2	WETLAND	35	35							0.01			
3	C	4	437.82	437.95	U	N/A	II C 2, III A 2	UPLAND	671		671						0.13			

SPREAD	SECTION	ROW MODE	FROM MP	TO MP	NWI CODE	HGM CLASS	VIERECK	DESCRIPTION	LINEAR FEET	WETLAND FEET	UPLAND FEET	DISTURBED FEET	Comments	Mode 1 - Ice Workpad (miles)	Mode 2 - Frost Pack (miles)	Mode 3 - Timber Mats	Mode 4 - Granular Workpad	Mode 5A - Grade	Mode 5B - Mountain Grade	Stream & Flood Plain Crossings
3	C	4	437.95	437.95	PFO4/SS1B	FLAT - ORGANIC	I A 2, II C 2	WETLAND	33	33							0.01			
3	C	4	437.95	437.96	PSS1/EM1B	DEPRESSIONAL	II C 2, III A 2	WETLAND	34	34							0.01			
3	C	4	437.96	438.09	PSS1B	FLAT - ORGANIC	II C 2	WETLAND	660	660							0.13			
3	C	4	438.09	438.16	PSS1/EM1B	FLAT - ORGANIC	II C 2, III A 2	WETLAND	396	396							0.07			
3	C	4	438.16	438.20	PSS1/4B	FLAT - ORGANIC	II A 3	WETLAND	222	222							0.04			
3	C	4	438.20	438.21	PSS1/EM1B	FLAT - ORGANIC	II C 2, III A 2	WETLAND	36	36							0.01			
3	C	4	438.21	438.22	PSS1/4B	FLAT - ORGANIC	II A 3	WETLAND	36	36							0.01			
3	C	4	438.22	438.47	PSS1/EM1B	FLAT - ORGANIC	II C 2, III A 2	WETLAND	1347	1347							0.26			
3	C	4	438.47	438.52	U	N/A	I C 2	UPLAND	274		274						0.05			
3	C	2	438.52	438.59	U	N/A	I C 2	UPLAND	343		343				0.06					
3	C	2	438.59	439.08	U	N/A	I C 1	UPLAND	2584		2584				0.49					
3	C	2	439.08	439.09	PSS1C	RIVERINE	II B 2	WETLAND	56	56					0.01					
3	C	2	439.09	439.09	PSS1C	RIVERINE	II B 1	WETLAND	11	11					0.00					
3	C	WB-W	439.09	439.09	PSS1C	RIVERINE	II B 1	WETLAND	20	20										0.00
3	C	WB-W	439.09	439.10	R2UBH	RIVERINE	NONE	WETLAND	7	7										0.00
3	C	WB-W	439.10	439.10	PSS1C	RIVERINE	II B 1	WETLAND	17	17										0.00
3	C	WB-W	439.10	439.13	R2UBH	RIVERINE	NONE	WETLAND	155	155										0.03
3	C	WB-W	439.13	439.13	PSS1C	RIVERINE	II B 1	WETLAND	11	11										0.00
3	C	WB-W	439.13	439.14	U	N/A	I C 2	UPLAND	60		60									0.01
3	C	2	439.14	439.17	U	N/A	I C 2	UPLAND	145		145				0.03					
3	C	2	439.17	439.17	D	N/A	NONE	DISTURBED	13			13			0.00					
3	C	2	439.17	439.19	U	N/A	I B 1, I B 2	UPLAND	90		90				0.02					
3	C	2	439.19	439.20	PSS1/EM1C	DEPRESSIONAL	II B 2, III A 3	WETLAND	39	39					0.01					
3	C	2	439.20	439.28	U	N/A	I B 1, I B 2	UPLAND	433		433				0.08					
3	C	WB-W	439.28	439.30	U	N/A	I B 1, I B 2	UPLAND	124		124									0.02
3	C	WB-W	439.30	439.31	PSS1/EM1C	DEPRESSIONAL	II B 2, III A 3	WETLAND	60	60										0.01
3	C	WB-W	439.31	439.33	U	N/A	I B 1, I B 2	UPLAND	86		86									0.02
3	C	2	439.33	439.38	U	N/A	I B 1, I B 2	UPLAND	249		249				0.05					
3	C	2	439.38	439.43	U	N/A	I C 2, II B 2	UPLAND	266		266				0.05					
3	C	2	439.43	439.48	U	N/A	I B 1, I B 2	UPLAND	294		294				0.06					
3	C	2	439.48	439.48	U	N/A	I C 2, I B 2	UPLAND	4		4				0.00					
3	C	2	439.48	439.50	U	N/A	I C 3, II B 2	UPLAND	80		80				0.02					
3	C	2	439.50	439.53	U	N/A	I C 2, II B 2	UPLAND	189		189				0.04					
3	C	2	439.53	439.58	U	N/A	I C 3, II B 2	UPLAND	249		249				0.05					
3	C	2	439.58	439.63	U	N/A	I C 2, II B 2	UPLAND	232		232				0.04					
3	C	2	439.63	439.63	PEM1/SS1B	DEPRESSIONAL	III A 3, II C 1	WETLAND	26	26					0.00					
3	C	WB-W	439.63	439.63	PEM1/SS1B	DEPRESSIONAL	III A 3, II C 1	WETLAND	10	10										0.00
3	C	WB-W	439.63	439.64	PUBH	DEPRESSIONAL	NONE	WETLAND	38	38										0.01
3	C	WB-W	439.64	439.64	PSS1/EM1C	DEPRESSIONAL	II C 2, I A 2	WETLAND	10	10										0.00
3	C	WB-W	439.64	439.65	U	N/A	I C 2	UPLAND	32		32									0.01
3	C	2	439.65	439.66	U	N/A	I C 2	UPLAND	87		87				0.02					
3	C	2	439.66	439.79	U	N/A	I C 2	UPLAND	642		642				0.12					
3	C	2	439.79	439.81	PEM1B	DEPRESSIONAL	III A 2	WETLAND	144	144					0.03					
3	C	2	439.81	439.87	U	N/A	I C 2	UPLAND	308		308				0.06					
3	C	2	439.87	439.87	PEM1/SS1E	DEPRESSIONAL	III A 2, II C 2	WETLAND	18	18					0.00					
3	C	WB-W	439.87	439.89	PEM1/SS1E	DEPRESSIONAL	III A 2, II C 2	WETLAND	60	60										0.01
3	C	2	439.89	439.89	PEM1/SS1E	DEPRESSIONAL	III A 2, II C 2	WETLAND	10	10					0.00					
3	C	2	439.89	439.91	U	N/A	I C 2	UPLAND	129		129				0.02					
3	C	2	439.91	439.93	PSS1/EM1B	DEPRESSIONAL	II B 2, III A 2	WETLAND	71	71					0.01					
3	C	2	439.93	439.95	U	N/A	I C 2	UPLAND	129		129				0.02					
3	C	2	439.95	439.97	PEM1/SS1B	DEPRESSIONAL	III A 3, II C 2	WETLAND	98	98					0.02					
3	C	4	439.97	439.97	PEM1/SS1B	DEPRESSIONAL	III A 3, II C 2	WETLAND	4	4							0.00			
3	C	4	439.97	439.99	U	N/A	I C 2	UPLAND	116		116						0.02			
3	C	4	439.99	440.00	PSS1/EM1B	DEPRESSIONAL	II B 2, III A 2	WETLAND	39	39							0.01			
3	C	4	440.00	440.00	PEM1/SS1B	DEPRESSIONAL	III A 3, II C 2	WETLAND	21	21							0.00			
3	C	4	440.00	440.04	PSS1B	FLAT - ORGANIC	II C 1	WETLAND	200	200							0.04			
3	C	4	440.04	440.06	U	N/A	I C 2	UPLAND	83		83						0.02			
3	C	4	440.06	440.14	PSS1B	FLAT - ORGANIC	II C 1	WETLAND	426	426							0.08			
3	C	4	440.14	440.15	PSS1/FO4B	FLAT - ORGANIC	I A 3	WETLAND	90	90							0.02			
3	C	4	440.15	440.17	PSS1/FO4B	FLAT - ORGANIC	II A 3, II C 1	WETLAND	69	69							0.01			
3	C	4	440.17	440.18	PSS1/FO4B	FLAT - ORGANIC	I A 3	WETLAND	53	53							0.01			
3	C	4	440.18	440.19	PEM1B	DEPRESSIONAL	III A 2	WETLAND	78	78							0.01			
3	C	4	440.19	440.21	PSS1/FO4B	FLAT - ORGANIC	I A 3, II C 1	WETLAND	79	79							0.01			
3	C	4	440.21	440.23	PSS1/FO4B	FLAT - ORGANIC	I A 3, II C 1	WETLAND	138	138							0.03			
3	C	4	440.23	440.26	PSS1/FO4B	FLAT - ORGANIC	I A 3, II C 1	WETLAND	146	146							0.03			
3	C	4	440.26	440.27	PEM1F	DEPRESSIONAL	III A 3	WETLAND	74	74							0.01			
3	C	4	440.27	440.28	PSS1/FO4B	FLAT - ORGANIC	I A 3, II C 1	WETLAND	29	29							0.01			
3	C	4	440.28	440.28	PSS1/FO4B	FLAT - ORGANIC	I A 3, II C 1	WETLAND	25	25							0.00			
3	C	4	440.28	440.30	PEM1F	DEPRESSIONAL	III A 3	WETLAND	59	59							0.01			
3	C	4	440.30	440.35	PSS1/FO4B	FLAT - ORGANIC	I A 3, II C 1	WETLAND	278	278							0.05			
3	C	2	440.35	440.36	PSS1/FO4B	FLAT - ORGANIC	I A 3, II C 1	WETLAND	43	43					0.01					
3	C	2	440.36	440.38	PFO4/SS1B	FLAT - ORGANIC	I A 2, II B 2	WETLAND	108	108					0.02					

SPREAD	SECTION	ROW MODE	FROM MP	TO MP	NWI CODE	HGM CLASS	VIERECK	DESCRIPTION	LINEAR FEET	WETLAND FEET	UPLAND FEET	DISTURBED FEET	Comments	Mode 1 - Ice Workpad (miles)	Mode 2 - Frost Pack (miles)	Mode 3 - Timber Mats	Mode 4 - Granular Workpad	Mode 5A - Grade	Mode 5B - Mountain Grade	Stream & Flood Plain Crossings
3	C	2	440.38	440.51	U	N/A	I C 2, II B 2	UPLAND	676		676				0.13					
3	C	2	440.51	440.51	PFO4/SS1B	FLAT - ORGANIC	I A 2	WETLAND	27	27					0.01					
3	C	2	440.51	440.57	U	N/A	I A 2, II B 2	UPLAND	286		286				0.05					
3	C	2	440.57	440.79	U	N/A	I C 2, II C 2	UPLAND	1163		1163				0.22					
3	C	2	440.79	440.80	U	N/A	I A 2, II B 2	UPLAND	80		80				0.02					
3	C	2	440.80	440.81	U	N/A	I C 2, II C 2	UPLAND	39		39				0.01					
3	C	2	440.81	440.90	U	N/A	I A 2, II B 2	UPLAND	474		474				0.09					
3	C	2	440.90	441.02	U	N/A	I C 2, II C 2	UPLAND	620		620				0.12					
3	C	2	441.02	441.06	U	N/A	I A 2, II B 2	UPLAND	211		211				0.04					
3	C	2	441.06	441.09	PFO4/SS4B	FLAT - ORGANIC	I A 2, II A 2	WETLAND	177	177					0.03					
3	C	2	441.09	441.14	U	N/A	I C 2, II C 2	UPLAND	249		249				0.05					
3	C	2	441.14	441.15	PSS1/4B	FLAT - ORGANIC	I A 3, II B 2	WETLAND	63	63					0.01					
3	C	2	441.15	441.19	U	N/A	I C 2, II C 2	UPLAND	199		199				0.04					
3	C	2	441.19	441.19	PSS1B	SLOPE	II B 2	WETLAND	23	23					0.00					
3	C	2	441.19	441.32	U	N/A	I C 2, II C 2	UPLAND	692		692				0.13					
3	C	2	441.32	441.35	U	N/A	I A 2, II B 2	UPLAND	148		148				0.03					
3	C	2	441.35	441.37	U	N/A	I C 2, II C 2	UPLAND	111		111				0.02					
3	C	2	441.37	441.39	U	N/A	I A 2, II B 2	UPLAND	119		119				0.02					
3	C	2	441.39	441.45	U	N/A	I C 2, II C 2	UPLAND	327		327				0.06					
3	C	2	441.45	441.47	U	N/A	II B 2	UPLAND	107		107				0.02					
3	C	2	441.47	441.49	U	N/A	I A 2, II B 2	UPLAND	89		89				0.02					
3	C	2	441.49	441.50	PFO4/SS1B	FLAT - ORGANIC	I A 2, II C 2	WETLAND	39	39					0.01					
3	C	2	441.50	441.51	U	N/A	I A 2, II B 2	UPLAND	43		43				0.01					
3	C	2	441.51	441.51	PFO4/SS1B	FLAT - ORGANIC	I A 2, II C 2	WETLAND	22	22					0.00					
3	C	2	441.51	441.52	U	N/A	I A 2	UPLAND	50		50				0.01					
3	C	2	441.52	441.55	U	N/A	II B 2	UPLAND	143		143				0.03					
3	C	2	441.55	441.56	U	N/A	I C 2, II B 2	UPLAND	77		77				0.01					
3	C	2	441.56	441.57	PSS1/FO1B	SLOPE	II B 2, I B 3	WETLAND	53	53					0.01					
3	C	2	441.57	441.59	U	N/A	I A 3, II B 2	UPLAND	99		99				0.02					
3	C	2	441.59	441.85	U	N/A	I A 2, II C 2	UPLAND	1378		1378				0.26					
3	C	2	441.85	441.87	U	N/A	II A 1	UPLAND	112		112				0.02					
3	C	2	441.87	441.89	PFO4/SS1B	FLAT - ORGANIC	I A 2, II C 2	WETLAND	73	73					0.01					
3	C	2	441.89	441.90	PFO4/SS1B	SLOPE	I A 2, II C 2	WETLAND	47	47					0.01					
3	C	2	441.90	441.91	U	N/A	I A 2	UPLAND	50		50				0.01					
3	C	2	441.91	441.92	PFO4/SS1B	SLOPE	I A 2, II C 2	WETLAND	101	101					0.02					
3	C	2	441.92	441.93	U	N/A	I A 2	UPLAND	23		23				0.00					
3	C	2	441.93	441.94	PFO4/SS1B	SLOPE	I A 2, II C 2	WETLAND	46	46					0.01					
3	C	2	441.94	442.02	PFO4/SS1B	FLAT - ORGANIC	I A 2, II C 2	WETLAND	433	433					0.08					
3	C	2	442.02	442.02	U	N/A	I C 2, II C 2	UPLAND	25		25				0.00					
3	C	2	442.02	442.18	U	N/A	I C 1	UPLAND	843		843				0.16					
3	C	2	442.18	442.36	U	N/A	I C 1	UPLAND	947		947				0.18					
3	C	WB-W	442.36	442.36	U	N/A	I C 1	UPLAND	8		8									0.00
3	C	WB-W	442.36	442.37	PSS1/EM1C	SLOPE	II B 2, III A 2	WETLAND	17	17										0.00
3	C	WB-W	442.37	442.37	U	N/A	I C 1	UPLAND	35		35									0.01
3	C	2	442.37	442.40	U	N/A	I C 1	UPLAND	125		125				0.02					
3	C	2	442.40	442.41	PSS1/FO4B	FLAT - ORGANIC	I A 3, II C 2	WETLAND	71	71					0.01					
3	C	2	442.41	442.46	PSS4/1B	FLAT - ORGANIC	I A 2, II A 2	WETLAND	266	266					0.05					
3	C	4	442.46	442.62	PSS4/1B	FLAT - ORGANIC	I A 2, II A 2	WETLAND	829	829							0.16			
3	C	4	442.62	442.71	U	N/A	I A 2, I A 3	UPLAND	464		464						0.09			
3	C	4	442.71	442.81	U	N/A	I C 2	UPLAND	546		546						0.10			
3	C	4	442.81	442.88	U	N/A	I A 2	UPLAND	353		353						0.07			
3	C	4	442.88	442.94	U	N/A	I C 2	UPLAND	332		332						0.06			
3	C	4	442.94	443.04	U	N/A	I A 2, II C 2	UPLAND	521		521						0.10			
3	C	4	443.04	443.08	U	N/A	I C 2	UPLAND	238		238						0.05			
3	C	4	443.08	443.27	U	N/A	I A 2, II C 2	UPLAND	965		965						0.18			
3	C	WB-W	443.27	443.27	U	N/A	I A 2, II C 2	UPLAND	8		8									0.00
3	C	WB-W	443.27	443.27	PSS1/EM1C	RIVERINE	II B 2, III A 2	WETLAND	33	33										0.01
3	C	WB-W	443.27	443.28	U	N/A	I C 2	UPLAND	19		19									0.00
3	C	4	443.28	443.29	U	N/A	I C 2	UPLAND	57		57						0.01			
3	C	4	443.29	443.31	PSS1C	SLOPE	II C 2, II B 2	WETLAND	113	113							0.02			
3	C	4	443.31	443.32	PSS1/EM1C	SLOPE	II B 2, III A 2	WETLAND	71	71							0.01			
3	C	4	443.32	443.33	U	N/A	I A 2	UPLAND	18		18						0.00			
3	C	2	443.33	443.33	U	N/A	I A 2	UPLAND	23		23				0.00					
3	C	2	443.33	443.39	U	N/A	I A 2, II C 2	UPLAND	290		290				0.05					
3	C	2	443.39	443.74	U	N/A	I A 2	UPLAND	1871		1871				0.35					
3	C	2	443.74	443.83	U	N/A	I A 2, II C 2	UPLAND	453		453				0.09					
3	C	2	443.83	443.84	U	N/A	I C 3, II B 2	UPLAND	51		51				0.01					
3	C	2	443.84	443.84	PSS1/FO4B	FLAT - ORGANIC	II A 3, II B 2	WETLAND	39	39					0.01					
3	C	2	443.84	443.85	U	N/A	I A 2, II C 2	UPLAND	38		38				0.01					
3	C	2	443.85	443.97	U	N/A	I C 2	UPLAND	609		609				0.12					
3	C	2	443.97	443.98	PFO4B	FLAT - ORGANIC	I A 2	WETLAND	81	81					0.02					
3	C	2	443.98	443.99	PSS1/4B	FLAT - ORGANIC	II A 2, I A 2	WETLAND	54	54					0.01					

SPREAD	SECTION	ROW MODE	FROM MP	TO MP	NWI CODE	HGM CLASS	VIERECK	DESCRIPTION	LINEAR FEET	WETLAND FEET	UPLAND FEET	DISTURBED FEET	Comments	Mode 1 - Ice Workpad (miles)	Mode 2 - Frost Pack (miles)	Mode 3 - Timber Mats	Mode 4 - Granular Workpad	Mode 5A - Grade	Mode 5B - Mountain Grade	Stream & Flood Plain Crossings
3	C	2	443.99	444.02	U	N/A	I C 2	UPLAND	130		130				0.02					
3	C	2	444.02	444.02	PSS1/EM1C	RIVERINE	II B 2, III A 2	WETLAND	32	32					0.01					
3	C	WB-W	444.02	444.03	PSS1/EM1C	RIVERINE	II B 2, III A 2	WETLAND	49	49										0.01
3	C	WB-W	444.03	444.04	PFO4/SS1B	FLAT - ORGANIC	I A 2	WETLAND	41	41										0.01
3	C	2	444.04	444.05	PFO4/SS1B	FLAT - ORGANIC	I A 2	WETLAND	52	52					0.01					
3	C	2	444.05	444.06	U	N/A	I A 2	UPLAND	66		66				0.01					
3	C	2	444.06	444.52	U	N/A	I C 2	UPLAND	2437		2437				0.46					
3	C	2	444.52	444.55	PSS1B	SLOPE	I C 3, II B 2	WETLAND	140	140					0.03					
3	C	2	444.55	444.64	U	N/A	I A 2	UPLAND	492		492				0.09					
3	C	2	444.64	444.65	PSS1/FO4B	SLOPE	I A 3, II C 2	WETLAND	16	16					0.00					
3	C	2	444.65	444.67	U	N/A	I A 2	UPLAND	132		132				0.03					
3	C	2	444.67	444.75	U	N/A	I C 2	UPLAND	417		417				0.08					
3	C	2	444.75	444.77	U	N/A	I A 3, II C 2	UPLAND	101		101				0.02					
3	C	2	444.77	444.78	U	N/A	I C 2	UPLAND	50		50				0.01					
3	C	2	444.78	444.80	U	N/A	I A 3, II C 2	UPLAND	111		111				0.02					
3	C	2	444.80	444.85	U	N/A	I C 2	UPLAND	251		251				0.05					
3	C	2	444.85	444.89	U	N/A	II B 1	UPLAND	249		249				0.05					
3	C	2	444.89	444.91	U	N/A	I B 3	UPLAND	109		109				0.02					
3	C	2	444.91	445.06	U	N/A	II B 1	UPLAND	791		791				0.15					
3	C	2	445.06	445.14	U	N/A	I B 3	UPLAND	406		406				0.08					
3	C	2	445.14	445.17	U	N/A	II B 1	UPLAND	129		129				0.02					
3	C	2	445.17	445.19	U	N/A	I C 2, II B 2	UPLAND	134		134				0.03					
3	C	2	445.19	445.20	PSS1/EM1B	SLOPE	II B 2, III A 2	WETLAND	63	63					0.01					
3	C	2	445.20	445.21	U	N/A	I B 3	UPLAND	57		57				0.01					
3	C	2	445.21	445.22	U	N/A	II B 1	UPLAND	54		54				0.01					
3	C	2	445.22	445.30	U	N/A	I C 3	UPLAND	424		424				0.08					
3	C	2	445.30	445.34	U	N/A	I C 2, II B 2	UPLAND	206		206				0.04					
3	C	2	445.34	445.35	R4SBC	RIVERINE	NONE	WETLAND	7	7					0.00					
3	C	2	445.35	445.46	U	N/A	I C 2, II B 2	UPLAND	605		605				0.11					
3	C	2	445.46	445.47	PSS1/FO4B	SLOPE	I A 3, II C 2	WETLAND	58	58					0.01					
3	C	2	445.47	446.34	U	N/A	I C 2, II B 2	UPLAND	4590		4590				0.87					
3	C	2	446.34	446.36	U	N/A	I A 2	UPLAND	90		90				0.02					
3	C	2	446.36	446.41	U	N/A	I C 2, II B 2	UPLAND	287		287				0.05					
3	C	WB-W	446.41	446.42	U	N/A	I C 2, II B 2	UPLAND	60		60									0.01
3	C	2	446.42	446.45	U	N/A	I C 2, II B 2	UPLAND	135		135				0.03					
3	C	2	446.45	446.49	U	N/A	I A 2	UPLAND	195		195				0.04					
3	C	2	446.49	446.63	U	N/A	I C 2, II B 2	UPLAND	743		743				0.14					
3	C	2	446.63	446.67	U	N/A	I A 2	UPLAND	226		226				0.04					
3	C	2	446.67	446.68	U	N/A	I A 2	UPLAND	82		82				0.02					
3	C	2	446.68	446.70	U	N/A	I A 2	UPLAND	64		64				0.01					
3	C	2	446.70	446.80	U	N/A	I A 2	UPLAND	558		558				0.11					
3	C	2	446.80	446.83	U	N/A	I A 2	UPLAND	130		130				0.02					
3	C	2	446.83	446.85	U	N/A	I A 2	UPLAND	132		132				0.03					
3	C	2	446.85	446.88	U	N/A	I A 2	UPLAND	160		160				0.03					
3	C	2	446.88	446.92	U	N/A	I A 2	UPLAND	218		218				0.04					
3	C	2	446.92	446.93	U	N/A	I A 2	UPLAND	56		56				0.01					
3	C	2	446.93	447.09	U	N/A	I A 2	UPLAND	811		811				0.15					
3	C	2	447.09	447.24	U	N/A	I C 2, II B 2	UPLAND	821		821				0.16					
3	C	2	447.24	447.28	U	N/A	I A 2	UPLAND	176		176				0.03					
3	C	2	447.28	447.31	U	N/A	I C 2, II B 2	UPLAND	195		195				0.04					
3	C	2	447.31	447.36	U	N/A	I A 2	UPLAND	226		226				0.04					
3	C	2	447.36	447.52	U	N/A	I C 2, II B 2	UPLAND	883		883				0.17					
3	C	2	447.52	447.56	U	N/A	I A 3, II C 2	UPLAND	176		176				0.03					
3	C	2	447.56	447.58	U	N/A	I C 2, II B 2	UPLAND	120		120				0.02					
3	C	2	447.58	447.60	U	N/A	I A 3, II C 2	UPLAND	118		118				0.02					
3	C	2	447.60	447.74	U	N/A	I C 2, II B 2	UPLAND	755		755				0.14					
3	C	2	447.74	447.76	U	N/A	I A 2	UPLAND	56		56				0.01					
3	C	2	447.76	448.31	U	N/A	I C 2, II B 2	UPLAND	2914		2914				0.55					
3	C	2	448.31	448.41	PSS1/FO4B	FLAT - ORGANIC	I A 3	WETLAND	553	553					0.10					
3	C	2	448.41	448.51	U	N/A	I C 2, II B 2	UPLAND	533		533				0.10					
3	C	2	448.51	448.54	PSS4/FO4B	FLAT - ORGANIC	I A 2, II A 2	WETLAND	169	169					0.03					
3	C	2	448.54	448.68	U	N/A	I C 2, II B 2	UPLAND	688		688				0.13					
3	C	2	448.68	448.71	PSS1/FO4B	FLAT - ORGANIC	I A 3	WETLAND	160	160					0.03					
3	C	2	448.71	448.74	U	N/A	I C 2, II B 2	UPLAND	159		159				0.03					
3	C	WB-W	448.74	448.75	U	N/A	I C 2, II B 2	UPLAND	60		60									0.01
3	C	2	448.75	449.17	U	N/A	I C 2, II B 2	UPLAND	2217		2217				0.42					
3	C	2	449.17	449.19	U	N/A	I A 2	UPLAND	115		115				0.02					
3	C	2	449.19	449.34	U	N/A	I C 2, II B 2	UPLAND	784		784				0.15					
3	C	2	449.34	449.40	U	N/A	I C 1	UPLAND	335		335				0.06					
3	C	2	449.40	449.43	U	N/A	I C 2, II B 2	UPLAND	179		179				0.03					
3	C	2	449.43	449.51	U	N/A	I A 2	UPLAND	397		397				0.08					
3	C	2	449.51	449.59	U	N/A	I A 3, II C 1	UPLAND	444		444				0.08					

SPREAD	SECTION	ROW MODE	FROM MP	TO MP	NWI CODE	HGM CLASS	VIERECK	DESCRIPTION	LINEAR FEET	WETLAND FEET	UPLAND FEET	DISTURBED FEET	Comments	Mode 1 - Ice Workpad (miles)	Mode 2 - Frost Pack (miles)	Mode 3 - Timber Mats	Mode 4 - Granular Workpad	Mode 5A - Grade	Mode 5B - Mountain Grade	Stream & Flood Plain Crossings
3	C	WB-W	449.59	449.61	U	N/A	I A 3, II C 1	UPLAND	80		80									0.02
3	C	WB-W	449.61	449.61	U	N/A	I C 2, II B 2	UPLAND	10		10									0.00
3	C	2	449.61	449.62	U	N/A	I C 2, II B 2	UPLAND	50		50				0.01					
3	C	2	449.62	449.63	U	N/A	I C 1	UPLAND	50		50				0.01					
3	C	2	449.63	449.65	U	N/A	I C 3, II C 1	UPLAND	129		129				0.02					
3	C	2	449.65	449.70	U	N/A	I C 1	UPLAND	222		222				0.04					
3	C	2	449.70	449.80	U	N/A	I C 2	UPLAND	536		536				0.10					
3	C	4	449.80	450.04	U	N/A	I C 2	UPLAND	1300		1300						0.25			
3	C	4	450.04	450.05	D	N/A	NONE	DISTURBED	53			53					0.01			
3	C	5A	450.05	450.06	D	N/A	NONE	DISTURBED	14			14						0.00		
3	C	5A	450.06	450.08	U	N/A	I C 2	UPLAND	126		126							0.02		
3	C	5A	450.08	450.17	U	N/A	I A 2	UPLAND	480		480							0.09		
3	C	5A	450.17	450.19	D	N/A	NONE	DISTURBED	74			74						0.01		
3	C	5A	450.19	450.31	U	N/A	I A 2	UPLAND	676		676							0.13		
3	C	5A	450.31	450.34	U	N/A	I C 2	UPLAND	138		138							0.03		
3	C	5A	450.34	450.40	U	N/A	II B 2, III A 1	UPLAND	311		311							0.06		
3	C	5A	450.40	450.40	D	N/A	NONE	DISTURBED	32			32						0.01		
3	C	5A	450.40	450.42	U	N/A	II B 2, III A 1	UPLAND	71		71							0.01		
3	C	5A	450.42	450.43	D	N/A	NONE	DISTURBED	88			88						0.02		
3	C	5A	450.43	450.45	U	N/A	II B 2, III A 1	UPLAND	72		72							0.01		
3	C	5A	450.45	450.46	D	N/A	NONE	DISTURBED	55			55						0.01		
3	C	5A	450.46	450.48	U	N/A	II B 2, III A 1	UPLAND	97		97							0.02		
3	C	5A	450.48	450.50	D	N/A	NONE	DISTURBED	122			122						0.02		
3	C	5A	450.50	450.51	U	N/A	II B 2, III A 1	UPLAND	46		46							0.01		
3	C	5A	450.51	450.51	U	N/A	I C 2	UPLAND	28		28							0.01		
3	C	WB-W	450.51	450.53	U	N/A	I C 2	UPLAND	60		60									0.01
3	C	5A	450.53	450.60	U	N/A	I C 2	UPLAND	387		387							0.07		
3	C	5A	450.60	450.65	U	N/A	II B 2, III A 1	UPLAND	254		254							0.05		
3	C	5A	450.65	451.22	U	N/A	I C 2	UPLAND	3031		3031							0.57		
3	C	5A	451.22	451.23	U	N/A	II B 1	UPLAND	50		50							0.01		
3	C	5A	451.23	451.29	U	N/A	I C 2	UPLAND	334		334							0.06		
3	C	5A	451.29	451.31	U	N/A	II B 1	UPLAND	66		66							0.01		
3	C	5A	451.31	451.46	U	N/A	I C 2	UPLAND	833		833							0.16		
3	C	5A	451.46	451.53	U	N/A	I A 2, II A 2	UPLAND	328		328							0.06		
3	C	5A	451.53	451.58	U	N/A	I C 2	UPLAND	263		263							0.05		
3	C	5A	451.58	451.60	U	N/A	I A 2, II A 2	UPLAND	151		151							0.03		
3	C	5A	451.60	451.86	U	N/A	I C 2	UPLAND	1327		1327							0.25		
3	C	5A	451.86	451.87	U	N/A	II B 2, III A 1	UPLAND	95		95							0.02		
3	C	5A	451.87	451.92	U	N/A	I C 2	UPLAND	220		220							0.04		
3	C	5A	451.92	451.95	U	N/A	I C 2, II B 2	UPLAND	175		175							0.03		
3	C	5A	451.95	451.99	U	N/A	II B 2, III A 1	UPLAND	239		239							0.05		
3	C	5A	451.99	452.01	U	N/A	I C 2, II B 2	UPLAND	103		103							0.02		
3	C	5A	452.01	452.02	U	N/A	II B 2, III A 1	UPLAND	25		25							0.00		
3	C	5A	452.02	452.09	U	N/A	I C 2, II B 2	UPLAND	373		373							0.07		
3	C	5A	452.09	452.12	PSS1/FO4B	FLAT - ORGANIC	I A 3, II C 2	WETLAND	152	152								0.03		
3	C	5A	452.12	452.25	U	N/A	I C 2, II B 2	UPLAND	690		690							0.13		
3	C	5A	452.25	452.25	PSS1/FO4B	FLAT - ORGANIC	I A 3, II B 2	WETLAND	33	33								0.01		
3	C	5A	452.25	452.26	U	N/A	II B 1	UPLAND	20		20							0.00		
3	C	16	452.26	452.26	U	N/A	II B 1	UPLAND	23		23									
3	C	16	452.26	452.27	U	N/A	I A 2	UPLAND	37		37									
3	C	5A	452.27	452.31	U	N/A	I A 2	UPLAND	201		201							0.04		
3	C	5A	452.31	452.31	U	N/A	I A 3, II C 2	UPLAND	19		19							0.00		
3	C	5A	452.31	452.34	U	N/A	I A 2	UPLAND	165		165							0.03		
3	C	5A	452.34	452.38	U	N/A	I A 3, II C 2	UPLAND	204		204							0.04		
3	C	5A	452.38	452.39	PSS1/FO4B	FLAT - ORGANIC	I A 3, II C 2	WETLAND	53	53								0.01		
3	C	5A	452.39	452.41	U	N/A	I C 2	UPLAND	114		114							0.02		
3	C	5A	452.41	452.44	PSS1B	SLOPE	I B 1	WETLAND	118	118								0.02		
3	C	5A	452.44	452.45	PSS1/FO4B	FLAT - ORGANIC	I A 3, II C 2	WETLAND	85	85								0.02		
3	C	5A	452.45	452.50	U	N/A	I A 2	UPLAND	274		274							0.05		
3	C	5A	452.50	452.50	U	N/A	I A 2	UPLAND	6		6							0.00		
3	C	5A	452.50	452.60	U	N/A	I A 3, II C 2	UPLAND	513		513							0.10		
3	C	5A	452.60	452.63	PFO4/SS4B	FLAT - ORGANIC	I A 2	WETLAND	126	126								0.02		
3	C	5A	452.63	452.63	U	N/A	I A 3, II C 2	UPLAND	14		14							0.00		
3	C	5A	452.63	452.64	PSS1/4B	FLAT - ORGANIC	I A 3, II C 2	WETLAND	90	90								0.02		
3	C	5A	452.64	452.76	U	N/A	I C 2	UPLAND	623		623							0.12		
3	C	5A	452.76	452.77	U	N/A	I B 2, I A 3	UPLAND	34		34							0.01		
3	C	5A	452.77	453.44	U	N/A	I C 1, I B 1	UPLAND	3537		3537							0.67		
3	C	5A	453.44	453.52	U	N/A	I C 2	UPLAND	414		414							0.08		
3	C	5A	453.52	453.54	U	N/A	I A 2, II C 2	UPLAND	105		105							0.02		
3	C	5A	453.54	453.55	PFO4B	FLAT - ORGANIC	I A 2	WETLAND	69	69								0.01		
3	C	5A	453.55	453.58	U	N/A	I A 2, II C 2	UPLAND	168		168							0.03		
3	C	5A	453.58	453.76	U	N/A	I C 2	UPLAND	928		928							0.18		

SPREAD	SECTION	ROW MODE	FROM MP	TO MP	NWI CODE	HGM CLASS	VIERECK	DESCRIPTION	LINEAR FEET	WETLAND FEET	UPLAND FEET	DISTURBED FEET	Comments	Mode 1 - Ice Workpad (miles)	Mode 2 - Frost Pack (miles)	Mode 3 - Timber Mats	Mode 4 - Granular Workpad	Mode 5A - Grade	Mode 5B - Mountain Grade	Stream & Flood Plain Crossings
3	C	WB-W	453.76	453.77	U	N/A	I C 2	UPLAND	60		60									0.01
3	C	5A	453.77	453.83	U	N/A	I C 2	UPLAND	327		327							0.06		
3	C	5A	453.83	453.84	PSS1B	FLAT - ORGANIC	I C 2, I A 3	WETLAND	71	71								0.01		
3	C	5A	453.84	454.34	U	N/A	I C 2	UPLAND	2628		2628							0.50		
3	C	5A	454.34	454.36	U	N/A	I A 2, II C 2	UPLAND	76		76							0.01		
3	C	5A	454.36	454.44	U	N/A	I C 2	UPLAND	443		443							0.08		
3	C	2	454.44	454.46	U	N/A	I C 2	UPLAND	109		109				0.02					
3	C	2	454.46	454.58	U	N/A	I A 2, II C 2	UPLAND	629		629				0.12					
3	C	2	454.58	454.60	U	N/A	I C 2	UPLAND	95		95				0.02					
3	C	2	454.60	454.61	U	N/A	I A 2, II C 2	UPLAND	57		57				0.01					
3	C	2	454.61	454.61	U	N/A	I C 2	UPLAND	12		12				0.00					
3	C	2	454.61	454.62	U	N/A	I C 2	UPLAND	55		55				0.01					
3	C	2	454.62	454.67	U	N/A	I C 2	UPLAND	229		229				0.04					
3	C	2	454.67	454.70	U	N/A	I C 2	UPLAND	180		180				0.03					
3	C	2	454.70	454.71	PEM1B	DEPRESSIONAL	III A 2	WETLAND	68	68					0.01					
3	C	2	454.71	454.75	U	N/A	I C 2	UPLAND	199		199				0.04					
3	C	2	454.75	454.76	PFO4/SS1B	FLAT - ORGANIC	I A 2, II B 2	WETLAND	72	72					0.01					
3	C	2	454.76	454.77	U	N/A	I A 2, II C 1	UPLAND	49		49				0.01					
3	C	2	454.77	454.78	PFO4/SS1B	FLAT - ORGANIC	I A 2, II B 2	WETLAND	47	47					0.01					
3	C	2	454.78	454.78	PFO4/SS1B	FLAT - ORGANIC	I A 2, II B 2	WETLAND	3	3					0.00					
3	C	2	454.78	454.79	U	N/A	I A 2	UPLAND	40		40				0.01					
3	C	2	454.79	454.80	PFO4/SS1B	FLAT - ORGANIC	I A 2, II B 2	WETLAND	71	71					0.01					
3	C	2	454.80	454.94	U	N/A	I A 2	UPLAND	713		713				0.14					
3	C	2	454.94	454.94	U	N/A	I C 2	UPLAND	4		4				0.00					
3	C	2	454.94	454.96	U	N/A	I C 3, II B 1	UPLAND	112		112				0.02					
3	C	2	454.96	454.97	U	N/A	III A 2, II C 2	UPLAND	25		25				0.00					
3	C	2	454.97	454.97	U	N/A	I C 3, II B 1	UPLAND	21		21				0.00					
3	C	2	454.97	454.98	U	N/A	III A 2, II C 2	UPLAND	56		56				0.01					
3	C	WB-W	454.98	454.98	U	N/A	III A 2, II C 2	UPLAND	16		16									0.00
3	C	WB-W	454.98	454.99	U	N/A	I C 3, II B 1	UPLAND	26		26									0.00
3	C	WB-W	454.99	455.00	R2UBH	RIVERINE	NONE	WETLAND	42	42										0.01
3	C	WB-W	455.00	455.01	U	N/A	I A 2, II C 1	UPLAND	65		65									0.01
3	C	WB-W	455.01	455.01	PFO4/SS1B	FLAT - ORGANIC	I A 2, II C 1	WETLAND	30	30										0.01
3	C	2	455.01	455.03	PFO4/SS1B	FLAT - ORGANIC	I A 2, II C 1	WETLAND	85	85					0.02					
3	C	2	455.03	455.04	U	N/A	I C 2	UPLAND	69		69				0.01					
3	C	2	455.04	455.08	PFO4/SS1B	FLAT - ORGANIC	I A 2, II C 1	WETLAND	204	204					0.04					
3	C	2	455.08	455.19	PSS1/FO4B	FLAT - ORGANIC	II C 1, I A 3	WETLAND	593	593					0.11					
3	C	2	455.19	455.20	PSS1B	FLAT - ORGANIC	II B 2	WETLAND	52	52					0.01					
3	C	2	455.20	455.30	PSS1/FO4B	FLAT - ORGANIC	II C 1, I A 3	WETLAND	484	484					0.09					
3	C	2	455.30	455.32	PFO4/SS1B	FLAT - ORGANIC	I A 2, II C 1	WETLAND	148	148					0.03					
3	C	2	455.32	455.36	U	N/A	I C 2	UPLAND	170		170				0.03					
3	C	2	455.36	455.49	PFO4/SS1B	FLAT - ORGANIC	I A 2, II C 1	WETLAND	687	687					0.13					
3	C	2	455.49	455.51	U	N/A	I C 2, II B 2	UPLAND	108		108				0.02					
3	C	2	455.51	455.61	PFO4/SS1B	FLAT - ORGANIC	I A 2, II C 1	WETLAND	534	534					0.10					
3	C	2	455.61	455.71	PSS1/FO4B	FLAT - ORGANIC	II C 2, I A 3	WETLAND	531	531					0.10					
3	C	2	455.71	455.90	PFO4/SS1B	FLAT - ORGANIC	I A 2, II C 1	WETLAND	1022	1022					0.19					
3	C	2	455.90	455.93	PSS1/EM1B	SLOPE	II C 2, III A 2	WETLAND	151	151					0.03					
3	C	2	455.93	455.95	PFO4/SS1B	FLAT - ORGANIC	I A 2, II C 1	WETLAND	93	93					0.02					
3	C	2	455.95	455.96	PUBH	DEPRESSIONAL	NONE	WETLAND	59	59					0.01					
3	C	2	455.96	455.99	PFO4/SS1B	FLAT - ORGANIC	I A 2, II C 1	WETLAND	143	143					0.03					
3	C	2	455.99	456.00	PSS1/EM1B	SLOPE	II C 2, III A 2	WETLAND	57	57					0.01					
3	C	2	456.00	456.04	PFO4/SS1B	FLAT - ORGANIC	I A 2, II C 1	WETLAND	210	210					0.04					
3	C	2	456.04	456.06	PSS1/EM1B	SLOPE	II C 2, III A 2	WETLAND	101	101					0.02					
3	C	2	456.06	456.26	PFO4/SS1B	FLAT - ORGANIC	I A 2, II C 1	WETLAND	1057	1057					0.20					
3	C	2	456.26	456.26	PSS1/EM1B	SLOPE	II C 2, III A 2	WETLAND	31	31					0.01					
3	C	2	456.26	456.70	PFO4/SS1B	FLAT - ORGANIC	I A 2, II C 1	WETLAND	2334	2334					0.44					
3	C	2	456.70	456.79	U	N/A	I C 2	UPLAND	469		469				0.09					
3	C	2	456.79	456.83	PSS1B	DEPRESSIONAL	II C 1	WETLAND	198	198					0.04					
3	C	2	456.83	456.85	PSS1/4B	FLAT - ORGANIC	II C 2, II A 3	WETLAND	122	122					0.02					
3	C	2	456.85	456.89	PSS1B	SLOPE	II C 1	WETLAND	209	209					0.04					
3	C	2	456.89	456.94	PSS1/4B	FLAT - ORGANIC	II C 2, II A 3	WETLAND	243	243					0.05					
3	C	2	456.94	456.96	PFO4/SS1B	FLAT - ORGANIC	I A 2, II C 1	WETLAND	122	122					0.02					
3	C	2	456.96	457.12	PSS1/4B	FLAT - ORGANIC	II C 2, II A 3	WETLAND	833	833					0.16					
3	C	2	457.12	457.14	PSS1/4B	SLOPE	II C 2, II A 3	WETLAND	87	87					0.02					
3	C	2	457.14	457.23	PSS1/4B	FLAT - ORGANIC	II C 2, II A 3	WETLAND	495	495					0.09					
3	C	2	457.23	457.24	PSS1/EM1C	SLOPE	II C 2, III A 2	WETLAND	62	62					0.01					
3	C	2	457.24	457.27	PSS1/FO1B	FLAT - ORGANIC	II C 2, I B 3	WETLAND	144	144					0.03					
3	C	2	457.27	457.33	PSS1/EM1C	SLOPE	II C 2, III A 2	WETLAND	341	341					0.06					
3	C	2	457.33	457.35	PSS1/FO1B	FLAT - ORGANIC	II C 2, I B 3	WETLAND	65	65					0.01					
3	C	2	457.35	457.38	PSS1B	FLAT - ORGANIC	II C 1, I A 3	WETLAND	195	195					0.04					
3	C	2	457.38	457.38	PSS1/EM1C	SLOPE	II C 2, III A 2	WETLAND	12	12					0.00					
3	C	2	457.38	457.44	PSS1B	FLAT - ORGANIC	II C 1, I A 3	WETLAND	317	317					0.06					

SPREAD	SECTION	ROW MODE	FROM MP	TO MP	NWI CODE	HGM CLASS	VIERECK	DESCRIPTION	LINEAR FEET	WETLAND FEET	UPLAND FEET	DISTURBED FEET	Comments	Mode 1 - Ice Workpad (miles)	Mode 2 - Frost Pack (miles)	Mode 3 - Timber Mats	Mode 4 - Granular Workpad	Mode 5A - Grade	Mode 5B - Mountain Grade	Stream & Flood Plain Crossings
3	C	2	457.44	457.47	PSS1/EM1C	SLOPE	II C 2, III A 2	WETLAND	151	151					0.03					
3	C	2	457.47	457.49	PSS1B	FLAT - ORGANIC	II C 1, I A 3	WETLAND	76	76					0.01					
3	C	2	457.49	457.50	PSS1/EM1C	SLOPE	II C 2, III A 2	WETLAND	54	54					0.01					
3	C	2	457.50	457.51	PEM1F	DEPRESSIONAL	III A 3	WETLAND	88	88					0.02					
3	C	2	457.51	457.52	PSS1/EM1C	SLOPE	II C 2, III A 2	WETLAND	39	39					0.01					
3	C	2	457.52	457.54	PEM1F	DEPRESSIONAL	III A 3	WETLAND	112	112					0.02					
3	C	2	457.54	457.59	PSS1/EM1C	SLOPE	II C 2, III A 2	WETLAND	249	249					0.05					
3	C	2	457.59	457.66	PSS1B	FLAT - ORGANIC	II C 1, I A 3	WETLAND	370	370					0.07					
3	C	2	457.66	457.67	PSS1/EM1C	SLOPE	II B 2, III A 3	WETLAND	48	48					0.01					
3	C	2	457.67	457.67	PEM1F	DEPRESSIONAL	III A 3	WETLAND	8	8					0.00					
3	C	2	457.67	457.68	PSS1/EM1C	SLOPE	II B 2, III A 3	WETLAND	58	58					0.01					
3	C	2	457.68	457.68	PSS1B	FLAT - ORGANIC	II C 1, I A 3	WETLAND	8	8					0.00					
3	C	2	457.68	457.70	PFO4/1B	FLAT - ORGANIC	I C 2, II B 2	WETLAND	107	107					0.02					
3	C	2	457.70	457.77	PSS1B	FLAT - ORGANIC	II C 1, I A 3	WETLAND	374	374					0.07					
3	C	2	457.77	457.79	PFO4/1B	FLAT - ORGANIC	I C 2, II B 2	WETLAND	89	89					0.02					
3	C	2	457.79	457.80	U	N/A	I C 2, II B 2	UPLAND	56		56				0.01					
3	C	2	457.80	457.81	PSS1/EM1C	SLOPE	II C 2, III A 3	WETLAND	40	40					0.01					
3	C	2	457.81	457.83	U	N/A	I C 2	UPLAND	85		85				0.02					
3	C	2	457.83	457.83	U	N/A	I C 2	UPLAND	2		2				0.00					
3	C	2	457.83	457.84	PSS1/FO4B	FLAT - ORGANIC	I A 2, II C 2	WETLAND	48	48					0.01					
3	C	2	457.84	457.85	U	N/A	I C 2	UPLAND	76		76				0.01					
3	C	2	457.85	459.04	U	N/A	I A 2	UPLAND	6275		6275				1.19					
3	C	2	459.04	459.05	PSS4/1B	FLAT - ORGANIC	I A 2, II A 2	WETLAND	63	63					0.01					
3	C	2	459.05	459.48	U	N/A	I A 2	UPLAND	2247		2247				0.43					
3	C	2	459.48	459.64	PSS4/1B	FLAT - ORGANIC	I A 2, II A 2	WETLAND	847	847					0.16					
3	C	2	459.64	459.74	PSS1B	DEPRESSIONAL	II C 2	WETLAND	555	555					0.11					
3	C	2	459.74	459.81	PSS4/FO4B	FLAT - ORGANIC	I A 2, II A 2	WETLAND	340	340					0.06					
3	C	2	459.81	460.26	PFO4/SS1B	FLAT - ORGANIC	I A 2	WETLAND	2409	2409					0.46					
3	C	2	460.26	460.33	U	N/A	I A 2	UPLAND	365		365				0.07					
3	C	2	460.33	460.53	PSS4/FO4B	FLAT - ORGANIC	I A 2, II A 2	WETLAND	1034	1034					0.20					
3	C	2	460.53	460.53	U	N/A	I A 2	UPLAND	14		14				0.00					
3	C	2	460.53	460.55	U	N/A	I A 2	UPLAND	87		87				0.02					
3	C	2	460.55	460.56	U	N/A	I C 1, I C 2	UPLAND	51		51				0.01					
3	C	2	460.56	460.62	U	N/A	I A 2	UPLAND	342		342				0.06					
3	C	2	460.62	460.66	U	N/A	I C 1, I C 2	UPLAND	197		197				0.04					
3	C	2	460.66	460.71	U	N/A	I A 2	UPLAND	274		274				0.05					
3	C	2	460.71	460.75	PSS4/FO4B	FLAT - ORGANIC	I A 2, II A 2	WETLAND	206	206					0.04					
3	C	2	460.75	460.76	U	N/A	I A 2	UPLAND	73		73				0.01					
3	C	2	460.76	460.89	U	N/A	I C 1, I C 2	UPLAND	683		683				0.13					
3	C	2	460.89	460.90	PFO4/SS4B	FLAT - ORGANIC	I A 2, II C 1	WETLAND	57	57					0.01					
3	C	2	460.90	460.93	U	N/A	I C 1, I C 2	UPLAND	164		164				0.03					
3	C	2	460.93	460.95	PFO4/SS4B	FLAT - ORGANIC	I A 2, II C 1	WETLAND	61	61					0.01					
3	C	2	460.95	461.32	U	N/A	I C 1, I C 2	UPLAND	1962		1962				0.37					
3	C	2	461.32	461.34	U	N/A	I A 2	UPLAND	112		112				0.02					
3	C	2	461.34	461.44	PSS4/FO4B	FLAT - ORGANIC	I A 2, II A 2	WETLAND	563	563					0.11					
3	C	2	461.44	461.45	PSS1/FO4B	SLOPE	II B 2, I A 3	WETLAND	27	27					0.01					
3	C	2	461.45	461.47	PSS4/FO4B	FLAT - ORGANIC	I A 2, II A 2	WETLAND	93	93					0.02					
3	C	2	461.47	461.62	U	N/A	I C 1, I C 2	UPLAND	797		797				0.15					
3	C	2	461.62	461.66	PFO4/SS1B	SLOPE	I A 2, II C 2	WETLAND	227	227					0.04					
3	C	2	461.66	461.75	U	N/A	I A 2, II C 2	UPLAND	454		454				0.09					
3	C	2	461.75	461.77	PSS4/FO4B	FLAT - ORGANIC	I A 2, II A 2	WETLAND	132	132					0.02					
3	C	2	461.77	461.78	U	N/A	I A 2, II C 2	UPLAND	64		64				0.01					
3	C	2	461.78	461.89	PSS4/FO4B	FLAT - ORGANIC	I A 2, II A 2	WETLAND	583	583					0.11					
3	C	2	461.89	461.99	U	N/A	I A 2, II C 2	UPLAND	504		504				0.10					
3	C	2	461.99	462.18	PSS4/FO4B	FLAT - ORGANIC	I A 2, II A 2	WETLAND	1007	1007					0.19					
3	C	2	462.18	462.19	PSS1/EM1B	FLAT - ORGANIC	II C 2, III A 2	WETLAND	53	53					0.01					
3	C	2	462.19	462.20	PSS4/FO4B	FLAT - ORGANIC	I A 2, II A 2	WETLAND	64	64					0.01					
3	C	2	462.20	462.25	PSS1/EM1B	FLAT - ORGANIC	II C 2, III A 2	WETLAND	227	227					0.04					
3	C	2	462.25	462.30	PSS4/FO4B	FLAT - ORGANIC	I A 2, II A 2	WETLAND	304	304					0.06					
3	C	2	462.30	462.36	U	N/A	I A 2, II C 2	UPLAND	275		275				0.05					
3	C	2	462.36	462.50	PSS4/FO4B	FLAT - ORGANIC	I A 2, II A 2	WETLAND	771	771					0.15					
3	C	2	462.50	462.55	U	N/A	I A 2, II C 2	UPLAND	276		276				0.05					
3	C	2	462.55	462.56	PSS4/FO4B	FLAT - ORGANIC	I A 2, II A 2	WETLAND	54	54					0.01					
3	C	2	462.56	462.64	PSS1/4B	FLAT - ORGANIC	II C 1, I A 3	WETLAND	417	417					0.08					
3	C	2	462.64	462.66	U	N/A	I A 2, II C 2	UPLAND	95		95				0.02					
3	C	2	462.66	462.82	PSS1/4B	FLAT - ORGANIC	II C 1, I A 3	WETLAND	836	836					0.16					
3	C	2	462.82	462.92	PSS4/FO4B	FLAT - ORGANIC	I A 2, II A 2	WETLAND	539	539					0.10					
3	C	2	462.92	463.33	PSS1/4B	FLAT - ORGANIC	II C 1, I A 3	WETLAND	2147	2147					0.41					
3	C	2	463.33	463.34	PSS1/EM1B	FLAT - ORGANIC	II C 2, III A 2	WETLAND	38	38					0.01					
3	C	2	463.34	463.44	PSS1/4B	FLAT - ORGANIC	II C 1, I A 3	WETLAND	531	531					0.10					
3	C	2	463.44	463.45	PSS1/EM1B	FLAT - ORGANIC	II C 2, III A 2	WETLAND	54	54					0.01					
3	C	2	463.45	463.46	PSS1/4B	FLAT - ORGANIC	II C 1, I A 3	WETLAND	86	86					0.02					

SPREAD	SECTION	ROW MODE	FROM MP	TO MP	NWI CODE	HGM CLASS	VIERECK	DESCRIPTION	LINEAR FEET	WETLAND FEET	UPLAND FEET	DISTURBED FEET	Comments	Mode 1 - Ice Workpad (miles)	Mode 2 - Frost Pack (miles)	Mode 3 - Timber Mats	Mode 4 - Granular Workpad	Mode 5A - Grade	Mode 5B - Mountain Grade	Stream & Flood Plain Crossings
3	C	2	463.46	463.49	PSS1/EM1B	FLAT - ORGANIC	II C 2, III A 2	WETLAND	139	139					0.03					
3	C	2	463.49	463.50	PSS1/4B	FLAT - ORGANIC	II C 1, I A 3	WETLAND	54	54					0.01					
3	C	2	463.50	463.53	PSS1/EM1B	FLAT - ORGANIC	II C 2, III A 2	WETLAND	151	151					0.03					
3	C	2	463.53	463.55	PSS1/4B	FLAT - ORGANIC	II C 1, I A 3	WETLAND	95	95					0.02					
3	C	2	463.55	463.55	PSS1/EM1B	FLAT - ORGANIC	II C 2, III A 2	WETLAND	5	5					0.00					
3	C	2	463.55	463.58	PSS1/4B	FLAT - ORGANIC	II C 1, I A 3	WETLAND	194	194					0.04					
3	C	2	463.58	463.60	PSS1/EM1B	FLAT - ORGANIC	II C 2, III A 2	WETLAND	111	111					0.02					
3	C	2	463.60	463.61	PSS1/4B	FLAT - ORGANIC	II C 1, I A 3	WETLAND	51	51					0.01					
3	C	2	463.61	463.64	PSS1/EM1B	FLAT - ORGANIC	II C 2, III A 2	WETLAND	130	130					0.02					
3	C	2	463.64	463.93	PSS1/EM1B	FLAT - ORGANIC	II C 2, III A 2	WETLAND	1544	1544					0.29					
3	C	2	463.93	464.04	PSS1B	FLAT - ORGANIC	II C 1, II B 2	WETLAND	561	561					0.11					
3	C	2	464.04	464.07	PSS1/EM1B	FLAT - ORGANIC	II C 2, III A 2	WETLAND	159	159					0.03					
3	C	2	464.07	464.09	PFO1/SS1B	FLAT - ORGANIC	I B 2, II B 2	WETLAND	118	118					0.02					
3	C	2	464.09	464.10	PSS1/EM1B	FLAT - ORGANIC	II C 2, III A 2	WETLAND	74	74					0.01					
3	C	2	464.10	464.12	PFO1/SS1B	FLAT - ORGANIC	I B 2, II B 2	WETLAND	73	73					0.01					
3	C	2	464.12	464.22	PSS1B	FLAT - ORGANIC	II C 1, II B 2	WETLAND	545	545					0.10					
3	C	2	464.22	464.26	PSS1/EM1B	FLAT - ORGANIC	II B 2, III A 2	WETLAND	210	210					0.04					
3	C	2	464.26	464.28	PFO1/SS1B	FLAT - ORGANIC	I B 2, II B 2	WETLAND	89	89					0.02					
3	C	2	464.28	464.30	PSS1/EM1B	FLAT - ORGANIC	II B 2, III A 2	WETLAND	102	102					0.02					
3	C	2	464.30	464.31	PFO1/SS1B	FLAT - ORGANIC	I B 2, II B 2	WETLAND	81	81					0.02					
3	C	2	464.31	464.32	PSS1/EM1B	FLAT - ORGANIC	II B 2, III A 2	WETLAND	36	36					0.01					
3	C	2	464.32	464.34	PEM1C	DEPRESSIONAL	III A 3	WETLAND	119	119					0.02					
3	C	2	464.34	464.35	PSS1B	FLAT - ORGANIC	II C 1, II B 2	WETLAND	22	22					0.00					
3	C	2	464.35	464.38	PFO1/SS1B	FLAT - ORGANIC	I B 2, II B 2	WETLAND	179	179					0.03					
3	C	2	464.38	464.40	PSS1/EM1B	FLAT - ORGANIC	II C 1, III A 2	WETLAND	98	98					0.02					
3	C	2	464.40	464.45	PEM1/SS1C	FLAT - ORGANIC	III A 2, II C 2	WETLAND	293	293					0.06					
3	C	2	464.45	464.49	PSS1/EM1B	FLAT - ORGANIC	II C 1, III A 2	WETLAND	171	171					0.03					
3	C	2	464.49	464.51	PSS1/4B	FLAT - ORGANIC	II A 2	WETLAND	109	109					0.02					
3	C	2	464.51	464.60	U	N/A	I C 2	UPLAND	512		512				0.10					
3	C	2	464.60	464.70	U	N/A	I A 2	UPLAND	515		515				0.10					
3	C	2	464.70	464.71	PSS1/FO1C	FLAT - ORGANIC	II B 1, I C 3	WETLAND	36	36					0.01					
3	C	2	464.71	465.03	U	N/A	I C 2	UPLAND	1706		1706				0.32					
3	C	2	465.03	465.04	PSS1/EM1C	SLOPE	II B 2, III A 3	WETLAND	49	49					0.01					
3	C	2	465.04	465.11	PFO4/SS4B	FLAT - ORGANIC	I A 2, I C 2	WETLAND	351	351					0.07					
3	C	2	465.11	465.14	U	N/A	I C 2	UPLAND	198		198				0.04					
3	C	2	465.14	465.16	PSS1/EM1C	DEPRESSIONAL	II C 2, III A 3	WETLAND	86	86					0.02					
3	C	2	465.16	465.18	PFO4/SS4B	FLAT - ORGANIC	I A 2, I C 2	WETLAND	111	111					0.02					
3	C	2	465.18	465.40	U	N/A	I C 2	UPLAND	1148		1148				0.22					
3	C	2	465.40	465.44	PEM1/SS1B	DEPRESSIONAL	III A 2, II C 2	WETLAND	190	190					0.04					
3	C	2	465.44	465.45	PSS1B	DEPRESSIONAL	II C 1, II B 2	WETLAND	98	98					0.02					
3	C	2	465.45	465.47	U	N/A	I C 2	UPLAND	109		109				0.02					
3	C	2	465.47	465.52	PFO4/SS4B	FLAT - ORGANIC	I A 2, I C 2	WETLAND	245	245					0.05					
3	C	2	465.52	465.54	PSS1B	FLAT - ORGANIC	II C 1, II B 2	WETLAND	88	88					0.02					
3	C	2	465.54	465.55	PEM1/SS1C	DEPRESSIONAL	III A 3, II C 2	WETLAND	79	79					0.01					
3	C	2	465.55	465.57	PEM1E	DEPRESSIONAL	III A 3	WETLAND	73	73					0.01					
3	C	2	465.57	465.63	PSS1B	FLAT - ORGANIC	II C 1, II B 2	WETLAND	346	346					0.07					
3	C	2	465.63	465.64	PSS1/EM1C	SLOPE	II C 2, III A 3	WETLAND	66	66					0.01					
3	C	WB-W	465.64	465.65	PSS1/EM1C	SLOPE	II C 2, III A 3	WETLAND	19	19										0.00
3	C	WB-W	465.65	465.65	PEM1/2Hb	RIVERINE	III A 3	WETLAND	15	15										0.00
3	C	WB-W	465.65	465.65	R3UBHb	RIVERINE	NONE, III A 3	WETLAND	19	19										0.00
3	C	WB-W	465.65	465.66	PEM1/2Hb	RIVERINE	III A 3	WETLAND	42	42										0.01
3	C	WB-W	465.66	465.67	PSS1B	FLAT - ORGANIC	II B 2, II C 1	WETLAND	25	25										0.00
3	C	2	465.67	465.69	PSS1B	FLAT - ORGANIC	II B 2, II C 1	WETLAND	114	114					0.02					
3	C	2	465.69	465.70	PSS1/EM1C	SLOPE	II C 2, III A 3	WETLAND	81	81					0.02					
3	C	2	465.70	465.75	PSS1/4B	FLAT - ORGANIC	II B 2, II A 3	WETLAND	266	266					0.05					
3	C	2	465.75	465.76	PEM1/SS1C	SLOPE	III A 3, II C 2	WETLAND	50	50					0.01					
3	C	2	465.76	465.77	PEM1F	SLOPE	III A 3	WETLAND	22	22					0.00					
3	C	2	465.77	465.78	PSS1/EM1Bb	RIVERINE	II B 2, III A 2	WETLAND	45	45					0.01					
3	C	2	465.78	465.78	R3UBHb	RIVERINE	NONE, III A 3	WETLAND	24	24					0.00					
3	C	2	465.78	465.80	U	N/A	I C 3, II B 2	UPLAND	87		87				0.02					
3	C	WB-W	465.80	465.82	U	N/A	I C 3, II B 2	UPLAND	120		120									0.02
3	C	2	465.82	465.83	U	N/A	I C 3, II B 2	UPLAND	59		59				0.01					
3	C	2	465.83	465.83	PEM1/SS1Cb	SLOPE	III A 3, II C 2	WETLAND	13	13					0.00					
3	C	2	465.83	465.84	PSS1B	SLOPE	II B 2, II C 1	WETLAND	52	52					0.01					
3	C	2	465.84	465.86	U	N/A	I B 2	UPLAND	95		95				0.02					
3	C	2	465.86	465.87	PSS1B	SLOPE	II B 2, II C 1	WETLAND	42	42					0.01					
3	C	2	465.87	465.89	U	N/A	I B 2	UPLAND	88		88				0.02					
3	C	2	465.89	465.89	PSS1B	SLOPE	II B 2, II C 1	WETLAND	34	34					0.01					
3	C	2	465.89	465.90	U	N/A	I B 2	UPLAND	60		60				0.01					
3	C	2	465.90	465.95	PSS1B	SLOPE	II B 2, II C 1	WETLAND	233	233					0.04					
3	C	2	465.95	465.96	U	N/A	I B 2	UPLAND	85		85				0.02					
3	C	2	465.96	466.00	PEM1/SS1C	SLOPE	III A 3, II C 2	WETLAND	204	204					0.04					

SPREAD	SECTION	ROW MODE	FROM MP	TO MP	NWI CODE	HGM CLASS	VIERECK	DESCRIPTION	LINEAR FEET	WETLAND FEET	UPLAND FEET	DISTURBED FEET	Comments	Mode 1 - Ice Workpad (miles)	Mode 2 - Frost Pack (miles)	Mode 3 - Timber Mats	Mode 4 - Granular Workpad	Mode 5A - Grade	Mode 5B - Mountain Grade	Stream & Flood Plain Crossings
3	C	2	466.00	466.03	PSS1B	FLAT - ORGANIC	II B 2, II C 1	WETLAND	122	122					0.02					
3	C	2	466.03	466.15	PSS1/EM1B	FLAT - ORGANIC	II C 1, III A 3	WETLAND	675	675					0.13					
3	C	2	466.15	466.19	PSS1/FO1B	FLAT - ORGANIC	II B 2, I B 3	WETLAND	189	189					0.04					
3	C	2	466.19	466.20	U	N/A	I B 2	UPLAND	43		43				0.01					
3	C	2	466.20	466.22	PSS1/FO1B	FLAT - ORGANIC	II B 2, I B 3	WETLAND	96	96					0.02					
3	C	2	466.22	466.23	PSS1/EM1E	FLAT - ORGANIC	II C 1, III A 3	WETLAND	96	96					0.02					
3	C	2	466.23	466.24	PSS1/FO1B	FLAT - ORGANIC	II B 2, I B 3	WETLAND	53	53					0.01					
3	C	2	466.24	466.26	PSS1/EM1E	FLAT - ORGANIC	II C 1, III A 3	WETLAND	64	64					0.01					
3	C	2	466.26	466.29	PSS1/FO1B	FLAT - ORGANIC	II B 2, I B 3	WETLAND	197	197					0.04					
3	C	2	466.29	466.32	PSS1/EM1E	FLAT - ORGANIC	II C 1, III A 3	WETLAND	161	161					0.03					
3	C	2	466.32	466.37	PSS1/EM1B	FLAT - ORGANIC	II C 2, II B 2	WETLAND	222	222					0.04					
3	C	2	466.37	466.37	PSS1/EM1E	FLAT - ORGANIC	II C 1, III A 3	WETLAND	40	40					0.01					
3	C	2	466.37	466.39	PSS1/EM1B	FLAT - ORGANIC	II C 2, II B 2	WETLAND	73	73					0.01					
3	C	2	466.39	466.47	PSS1/EM1E	FLAT - ORGANIC	II C 1, III A 3	WETLAND	416	416					0.08					
3	C	2	466.47	466.57	PSS1/FO1B	FLAT - ORGANIC	II B 2, I B 3	WETLAND	558	558					0.11					
3	C	2	466.57	466.59	PSS1/EM1E	FLAT - ORGANIC	II C 1, III A 3	WETLAND	100	100					0.02					
3	C	2	466.59	466.60	PSS1/FO1B	FLAT - ORGANIC	II B 2, I B 3	WETLAND	29	29					0.01					
3	C	2	466.60	466.60	PSS1/FO1B	FLAT - ORGANIC	II B 2, I B 3	WETLAND	15	15					0.00					
3	C	2	466.60	466.70	PSS1/EM1E	FLAT - ORGANIC	II C 1, III A 3	WETLAND	540	540					0.10					
3	C	2	466.70	466.71	PEM1C	DEPRESSIONAL	III A 3	WETLAND	43	43					0.01					
3	C	2	466.71	466.74	PSS1/EM1E	FLAT - ORGANIC	II C 1, III A 3	WETLAND	157	157					0.03					
3	C	2	466.74	466.77	PEM1E	DEPRESSIONAL	III A 3	WETLAND	146	146					0.03					
3	C	2	466.77	466.89	PSS1/EM1E	FLAT - ORGANIC	II C 1, III A 3	WETLAND	661	661					0.13					
3	C	2	466.89	466.92	U	N/A	I B 1	UPLAND	123		123				0.02					
3	C	2	466.92	467.04	PSS1/EM1E	FLAT - ORGANIC	II C 1, III A 3	WETLAND	678	678					0.13					
3	C	2	467.04	467.05	PFO1/SS1B	FLAT - ORGANIC	I B 2, II B 2	WETLAND	24	24					0.00					
3	C	2	467.05	467.06	PSS1/EM1E	FLAT - ORGANIC	II C 1, III A 3	WETLAND	41	41					0.01					
3	C	2	467.06	467.21	U	N/A	I B 2, II B 2	UPLAND	819		819				0.16					
3	C	2	467.21	467.23	PSS1B	FLAT - ORGANIC	II B 2, II C 2	WETLAND	118	118					0.02					
3	C	2	467.23	467.33	U	N/A	I B 2, II B 2	UPLAND	525		525				0.10					
3	C	2	467.33	467.51	PSS1/EM1E	FLAT - ORGANIC	II C 1, III A 3	WETLAND	919	919					0.17					
3	C	2	467.51	467.53	PSS1/4C	FLAT - ORGANIC	II C 2, II A 3	WETLAND	113	113					0.02					
3	C	2	467.53	467.54	PSS1/EM1E	FLAT - ORGANIC	II C 1, III A 3	WETLAND	55	55					0.01					
3	C	2	467.54	467.58	PSS1/4C	FLAT - ORGANIC	II C 2, II A 3	WETLAND	231	231					0.04					
3	C	2	467.58	467.61	PSS1/EM1E	FLAT - ORGANIC	II C 1, III A 3	WETLAND	156	156					0.03					
3	C	2	467.61	467.64	PSS1/FO1B	FLAT - ORGANIC	I B 3, II C 2	WETLAND	142	142					0.03					
3	C	2	467.64	467.66	U	N/A	I B 2, II B 2	UPLAND	110		110				0.02					
3	C	2	467.66	467.66	PSS1/FO1B	FLAT - ORGANIC	I B 3, II C 2	WETLAND	9	9					0.00					
3	C	2	467.66	467.66	PSS1/EM1E	FLAT - ORGANIC	II C 1, III A 3	WETLAND	15	15					0.00					
3	C	2	467.66	467.67	PSS1/FO1B	FLAT - ORGANIC	I B 3, II C 2	WETLAND	27	27					0.01					
3	C	2	467.67	467.68	PSS1/EM1E	FLAT - ORGANIC	II C 1, III A 3	WETLAND	66	66					0.01					
3	C	2	467.68	467.72	U	N/A	I B 2, II B 2	UPLAND	191		191				0.04					
3	C	2	467.72	467.73	PFO1/SS1B	SLOPE	I B 2, II B 2	WETLAND	63	63					0.01					
3	C	2	467.73	467.77	U	N/A	I B 2, II B 2	UPLAND	232		232				0.04					
3	C	2	467.77	467.80	PFO1/SS1B	SLOPE	I B 2, II B 2	WETLAND	157	157					0.03					
3	C	2	467.80	467.81	U	N/A	I B 2, II B 2	UPLAND	28		28				0.01					
3	C	2	467.81	468.00	PFO1/SS1B	SLOPE	I B 2, II B 2	WETLAND	983	983					0.19					
3	C	2	468.00	468.01	PEM1/SS1C	SLOPE	III A 3, II C 2	WETLAND	78	78					0.01					
3	C	2	468.01	468.05	PFO1/SS1B	SLOPE	I B 2, II B 2	WETLAND	219	219					0.04					
3	C	2	468.05	468.06	PEM1/SS1C	SLOPE	III A 3, II C 2	WETLAND	22	22					0.00					
3	C	2	468.06	468.10	PFO1/SS1B	SLOPE	I B 2, II B 2	WETLAND	259	259					0.05					
3	C	2	468.10	468.12	PEM1F	SLOPE	III A 3	WETLAND	103	103					0.02					
3	C	2	468.12	468.29	PFO1/SS1B	SLOPE	I B 2, II B 2	WETLAND	901	901					0.17					
3	C	2	468.29	468.33	PEM1F	SLOPE	III A 3	WETLAND	204	204					0.04					
3	C	2	468.33	468.34	PEM1E	SLOPE	III A 3	WETLAND	19	19					0.00					
3	C	2	468.34	468.37	PEM1F	SLOPE	III A 3	WETLAND	153	153					0.03					
3	C	2	468.37	468.43	PEM1E	SLOPE	III A 3	WETLAND	362	362					0.07					
3	C	2	468.43	468.60	PFO1/SS1B	SLOPE	I B 2, II B 2	WETLAND	865	865					0.16					
3	C	2	468.60	468.61	PEM1/SS1E	SLOPE	III A 3, II C 2	WETLAND	85	85					0.02					
3	C	2	468.61	468.78	PFO1/SS1B	SLOPE	I B 2, II B 2	WETLAND	849	849					0.16					
3	C	2	468.78	468.78	PFO1/SS1A	SLOPE	I B 2, II B 2	WETLAND	9	9					0.00					
3	C	2	468.78	468.79	PFO1/SS1B	SLOPE	I B 2, II B 2	WETLAND	80	80					0.02					
3	C	2	468.79	468.84	PFO1/SS1A	SLOPE	I B 2, II B 2	WETLAND	248	248					0.05					
3	C	2	468.84	468.88	PFO1/SS1B	SLOPE	I B 2, II B 2	WETLAND	201	201					0.04					
3	C	2	468.88	468.89	PSS1B	SLOPE	II B 2, II C 1	WETLAND	81	81					0.02					
3	C	2	468.89	468.91	PSS1/FO1B	SLOPE	II B 2, I B 3	WETLAND	75	75					0.01					
3	C	2	468.91	468.92	PSS1B	SLOPE	II B 2, II C 1	WETLAND	68	68					0.01					
3	C	2	468.92	468.94	PSS1/FO1B	SLOPE	II B 2, I B 3	WETLAND	114	114					0.02					
3	C	2	468.94	468.96	PSS1/EM1B	SLOPE	II C 1, III A 2	WETLAND	72	72					0.01					
3	C	2	468.96	469.10	PFO1/SS1C	SLOPE	I B 3, II B 2	WETLAND	743	743					0.14					
3	C	2	469.10	469.12	U	N/A	I B 2, II B 2	UPLAND	107		107				0.02					
3	C	2	469.12	469.13	PFO1/SS1C	SLOPE	I B 3, II B 2	WETLAND	89	89					0.02					

SPREAD	SECTION	ROW MODE	FROM MP	TO MP	NWI CODE	HGM CLASS	VIERECK	DESCRIPTION	LINEAR FEET	WETLAND FEET	UPLAND FEET	DISTURBED FEET	Comments	Mode 1 - Ice Workpad (miles)	Mode 2 - Frost Pack (miles)	Mode 3 - Timber Mats	Mode 4 - Granular Workpad	Mode 5A - Grade	Mode 5B - Mountain Grade	Stream & Flood Plain Crossings
3	C	2	469.13	469.18	U	N/A	I B 1	UPLAND	273		273				0.05					
3	C	2	469.18	469.19	D	N/A	NONE	DISTURBED	47			47			0.01					
3	C	2	469.19	469.26	U	N/A	I B 1	UPLAND	336		336				0.06					
3	C	2	469.26	469.27	PSS1B	DEPRESSIONAL	II B 2, II C 1	WETLAND	69	69					0.01					
3	C	2	469.27	469.32	U	N/A	I B 1	UPLAND	247		247				0.05					
3	C	2	469.32	469.32	PSS1/EM1A	RIVERINE	II B 2, III A 2	WETLAND	15	15					0.00					
3	C	WB-W	469.32	469.32	PSS1/EM1A	RIVERINE	II B 2, III A 2	WETLAND	2	2										0.00
3	C	WB-W	469.32	469.33	PEM1C	RIVERINE	III A 2	WETLAND	62	62										0.01
3	C	WB-W	469.33	469.34	PSS1/EM1A	RIVERINE	II B 2, III A 2	WETLAND	26	26										0.00
3	C	2	469.34	469.35	PSS1/EM1A	RIVERINE	II B 2, III A 2	WETLAND	47	47					0.01					
3	C	2	469.35	469.73	U	N/A	I B 1	UPLAND	2042		2042				0.39					
3	C	2	469.73	469.75	PSS1/EM1C	RIVERINE	II B 2, III A 2	WETLAND	84	84					0.02					
3	C	2	469.75	469.77	U	N/A	I B 2, II B 2	UPLAND	114		114				0.02					
3	C	2	469.77	469.77	PSS1/EM1C	RIVERINE	II B 2, III A 2	WETLAND	22	22					0.00					
3	C	2	469.77	469.82	U	N/A	I B 2, II B 2	UPLAND	238		238				0.05					
3	C	2	469.82	469.83	PSS1/EM1C	RIVERINE	II B 2, III A 2	WETLAND	55	55					0.01					
3	C	2	469.83	469.84	PSS1A	RIVERINE	II B 2	WETLAND	28	28					0.01					
3	C	2	469.84	469.92	U	N/A	I B 1, II B 1	UPLAND	436		436				0.08					
3	C	2	469.92	469.92	PSS1C	RIVERINE	II B 2	WETLAND	23	23					0.00					
3	C	WB-W	469.92	469.92	PSS1C	RIVERINE	II B 2	WETLAND	4	4										0.00
3	C	WB-W	469.92	469.94	PSS1/EM1E	RIVERINE	II B 2, III A 2	WETLAND	113	113										0.02
3	C	WB-W	469.94	469.95	U	N/A	I B 1	UPLAND	32		32									0.01
3	C	2	469.95	470.27	U	N/A	I B 1	UPLAND	1675		1675				0.32					
3	C	2	470.27	470.31	U	N/A	I C 2	UPLAND	197		197				0.04					
3	C	2	470.31	470.31	U	N/A	I B 1	UPLAND	27		27				0.01					
3	C	2	470.31	470.33	U	N/A	II B 1	UPLAND	116		116				0.02					
3	C	2	470.33	470.41	U	N/A	I B 1	UPLAND	420		420				0.08					
3	C	2	470.41	470.42	PSS1B	DEPRESSIONAL	II B 1	WETLAND	40	40					0.01					
3	C	2	470.42	470.49	U	N/A	I A 2	UPLAND	360		360				0.07					
3	C	2	470.49	470.50	PSS1/EM1C	DEPRESSIONAL	II C 2, III A 3	WETLAND	63	63					0.01					
3	C	2	470.50	470.51	U	N/A	II B 2	UPLAND	80		80				0.02					
3	C	2	470.51	470.54	U	N/A	I C 2	UPLAND	113		113				0.02					
3	C	2	470.54	470.54	U	N/A	II C 2, III A 2	UPLAND	13		13				0.00					
3	C	2	470.54	470.55	PEM1C	DEPRESSIONAL	III A 2	WETLAND	58	58					0.01					
3	C	2	470.55	470.70	U	N/A	I C 2	UPLAND	801		801				0.15					
3	C	2	470.70	470.71	U	N/A	II C 2, III A 2	UPLAND	32		32				0.01					
3	C	2	470.71	470.72	U	N/A	I C 2	UPLAND	87		87				0.02					
3	C	2	470.72	470.73	U	N/A	II C 2, III A 2	UPLAND	43		43				0.01					
3	C	2	470.73	470.75	D	N/A	NONE	DISTURBED	76			76			0.01					
3	C	2	470.75	470.75	U	N/A	II C 2, III A 2	UPLAND	40		40				0.01					
3	C	2	470.75	470.80	U	N/A	I C 2	UPLAND	239		239				0.05					
3	C	2	470.80	470.81	PFO1B	SLOPE	I B 1, II B 2	WETLAND	67	67					0.01					
3	C	2	470.81	470.83	U	N/A	I C 2	UPLAND	77		77				0.01					
3	C	2	470.83	470.83	PFO1B	SLOPE	I B 1, II B 2	WETLAND	3	3					0.00					
3	C	2	470.83	470.88	U	N/A	I C 2	UPLAND	279		279				0.05					
3	C	2	470.88	470.94	PSS1/EM1B	DEPRESSIONAL	II B 2, III A 2	WETLAND	308	308					0.06					
3	C	2	470.94	470.95	U	N/A	I C 2	UPLAND	42		42				0.01					
3	C	2	470.95	470.97	PSS1/EM1B	DEPRESSIONAL	II B 2, III A 2	WETLAND	133	133					0.03					
3	C	2	470.97	471.06	U	N/A	I C 2	UPLAND	491		491				0.09					
3	C	2	471.06	471.13	PFO1B	SLOPE	I B 1, II B 2	WETLAND	348	348					0.07					
3	C	2	471.13	471.32	U	N/A	I B 2, II B 2	UPLAND	978		978				0.19					
3	C	2	471.32	471.33	PSS1/EM1B	DEPRESSIONAL	II B 2, III A 2	WETLAND	56	56					0.01					
3	C	2	471.33	471.55	U	N/A	I B 2, II B 2	UPLAND	1198		1198				0.23					
3	C	2	471.55	471.56	PSS1/EM1B	DEPRESSIONAL	II C 2, III A 2	WETLAND	16	16					0.00					
3	C	2	471.56	471.56	U	N/A	I B 2, II B 2	UPLAND	48		48				0.01					
3	C	2	471.56	471.57	PSS1/EM1B	DEPRESSIONAL	II C 2, III A 2	WETLAND	23	23					0.00					
3	C	2	471.57	471.63	U	N/A	I B 2, II B 2	UPLAND	315		315				0.06					
3	C	2	471.63	471.64	PSS1/EM1B	DEPRESSIONAL	II C 2, III A 2	WETLAND	40	40					0.01					
3	C	2	471.64	471.65	PEM1/SS1E	DEPRESSIONAL	III A 3, II C 2	WETLAND	59	59					0.01					
3	C	2	471.65	471.65	PSS1/EM1B	DEPRESSIONAL	II C 2, III A 2	WETLAND	15	15					0.00					
3	C	2	471.65	471.67	PSS1B	FLAT - ORGANIC	II B 2	WETLAND	112	112					0.02					
3	C	2	471.67	471.68	U	N/A	I C 2	UPLAND	23		23				0.00					
3	C	2	471.68	471.68	PSS1B	FLAT - ORGANIC	II B 2	WETLAND	31	31					0.01					
3	C	2	471.68	471.69	D	N/A	NONE	DISTURBED	47			47			0.01					
3	C	2	471.69	471.76	PSS1B	FLAT - ORGANIC	II C 2	WETLAND	341	341					0.06					
3	C	2	471.76	471.76	PEM1B	FLAT - ORGANIC	III A 2	WETLAND	31	31					0.01					
3	C	2	471.76	471.79	PSS1B	FLAT - ORGANIC	II C 2	WETLAND	135	135					0.03					
3	C	2	471.79	471.81	U	N/A	III A 2	UPLAND	130		130				0.02					
3	C	2	471.81	471.82	U	N/A	II C 2	UPLAND	39		39				0.01					
3	C	2	471.82	471.85	U	N/A	III A 2	UPLAND	180		180				0.03					
3	C	2	471.85	471.86	D	N/A	NONE	DISTURBED	18			18			0.00					
3	C	2	471.86	471.88	U	N/A	III A 2	UPLAND	125		125				0.02					

SPREAD	SECTION	ROW MODE	FROM MP	TO MP	NWI CODE	HGM CLASS	VIERECK	DESCRIPTION	LINEAR FEET	WETLAND FEET	UPLAND FEET	DISTURBED FEET	Comments	Mode 1 - Ice Workpad (miles)	Mode 2 - Frost Pack (miles)	Mode 3 - Timber Mats	Mode 4 - Granular Workpad	Mode 5A - Grade	Mode 5B - Mountain Grade	Stream & Flood Plain Crossings
3	C	2	471.88	471.89	PSS1B	FLAT - ORGANIC	II C 2	WETLAND	54	54					0.01					
3	C	2	471.89	471.91	PEM1C	DEPRESSIONAL	III A 2	WETLAND	96	96					0.02					
3	C	2	471.91	471.93	U	N/A	III A 2	UPLAND	93		93				0.02					
3	C	2	471.93	471.94	PEM1C	DEPRESSIONAL	III A 2	WETLAND	60	60					0.01					
3	C	2	471.94	471.96	U	N/A	III A 2	UPLAND	116		116				0.02					
3	C	2	471.96	471.96	D	N/A	NONE	DISTURBED	1			1			0.00					
3	C	4	471.96	471.96	D	N/A	NONE	DISTURBED	15			15					0.00			
3	C	4	471.96	471.99	U	N/A	II C 2, III A 2	UPLAND	163		163						0.03			
3	C	4	471.99	472.01	PEM1/SS1B	FLAT - ORGANIC	III A 2, II C 2	WETLAND	83	83							0.02			
3	C	4	472.01	472.05	U	N/A	II C 2, III A 2	UPLAND	227		227						0.04			
3	C	4	472.05	472.08	U	N/A	I B 1	UPLAND	163		163						0.03			
3	C	4	472.08	472.09	PSS1/EM1B	DEPRESSIONAL	II B 2, III A 2	WETLAND	49	49							0.01			
3	C	4	472.09	472.13	U	N/A	I B 1	UPLAND	181		181						0.03			
3	C	4	472.13	472.14	PSS1/EM1B	DEPRESSIONAL	II B 2, III A 2	WETLAND	69	69							0.01			
3	C	4	472.14	472.21	U	N/A	I B 1	UPLAND	367		367						0.07			
3	C	4	472.21	472.24	PSS1/EM1B	DEPRESSIONAL	II B 2, III A 2	WETLAND	169	169							0.03			
3	C	4	472.24	472.28	U	N/A	I B 1	UPLAND	231		231						0.04			
3	C	4	472.28	472.29	D	N/A	NONE	DISTURBED	27			27					0.01			
3	C	4	472.29	472.36	U	N/A	I B 2	UPLAND	362		362						0.07			
3	C	4	472.36	472.37	PSS1B	DEPRESSIONAL	II B 2	WETLAND	65	65							0.01			
3	C	4	472.37	472.38	U	N/A	I B 2	UPLAND	59		59						0.01			
3	C	4	472.38	472.39	PSS1B	DEPRESSIONAL	II B 2	WETLAND	28	28							0.01			
3	C	4	472.39	472.61	U	N/A	I B 2	UPLAND	1198		1198						0.23			
3	C	4	472.61	472.62	U	N/A	II C 2, III A 2	UPLAND	22		22						0.00			
3	C	4	472.62	472.71	D	N/A	NONE	DISTURBED	488			488					0.09			
3	C	4	472.71	472.73	U	N/A	II C 2, III A 2	UPLAND	95		95						0.02			
3	C	WB-W	472.73	472.73	U	N/A	II C 2, III A 2	UPLAND	6		6									0.00
3	C	WB-W	472.73	472.75	U	N/A	II B 2	UPLAND	86		86									0.02
3	C	WB-W	472.75	473.02	R2UBH	RIVERINE	NONE	WETLAND	1452	1452										0.28
3	C	WB-W	473.02	473.18	R2UBH	RIVERINE	NONE	WETLAND	857	857										0.16
3	C	WB-W	473.18	473.23	U	N/A	I C 1, I C 2	UPLAND	224		224									0.04
3	C	WB-W	473.23	473.24	U	N/A	II B 2	UPLAND	91		91									0.02
3	C	4	473.24	473.25	U	N/A	II B 2	UPLAND	8		8						0.00			
3	C	4	473.25	473.25	U	N/A	II B 2	UPLAND	9		9						0.00			
3	C	4	473.25	473.28	U	N/A	I B 1	UPLAND	170		170						0.03			
3	C	4	473.28	473.31	U	N/A	I B 1	UPLAND	188		188						0.04			
3	D	4	473.31	473.37	U	N/A	I C 1, I C 2	UPLAND	314		314						0.06			
3	D	4	473.37	473.38	PSS1A	RIVERINE	II B 2	WETLAND	41	41							0.01			
3	D	4	473.38	473.43	U	N/A	I C 1, I C 2	UPLAND	252		252						0.05			
3	D	4	473.43	473.56	U	N/A	I B 1	UPLAND	709		709						0.13			
3	D	4	473.56	473.58	U	N/A	I C 2, II B 2	UPLAND	65		65						0.01			
3	D	4	473.58	473.58	PSS1A	RIVERINE	II B 2	WETLAND	19	19							0.00			
3	D	4	473.58	473.74	U	N/A	I C 2, II B 2	UPLAND	839		839						0.16			
3	D	4	473.74	473.75	PSS1A	RIVERINE	II B 2	WETLAND	49	49							0.01			
3	D	4	473.75	473.75	U	N/A	I C 2, II B 2	UPLAND	36		36						0.01			
3	D	4	473.75	473.75	PSS1A	RIVERINE	II B 2	WETLAND	1	1							0.00			
3	D	4	473.75	473.76	U	N/A	III A 2	UPLAND	42		42						0.01			
3	D	4	473.76	473.77	D	N/A	NONE	DISTURBED	32			32					0.01			
3	D	4	473.77	473.78	U	N/A	I C 2, II B 2	UPLAND	53		53						0.01			
3	E	4	473.78	473.85	U	N/A	I C 2, II B 2	UPLAND	351		351						0.07			
3	E	4	473.85	473.85	U	N/A	II C 2	UPLAND	15		15						0.00			
3	E	4	473.85	474.21	U	N/A	I C 2, II B 2	UPLAND	1911		1911						0.36			
3	E	4	474.21	474.22	PSS1B	RIVERINE	II B 2	WETLAND	70	70							0.01			
3	E	4	474.22	474.23	U	N/A	I C 2, II B 2	UPLAND	51		51						0.01			
3	E	4	474.23	474.25	PSS1B	RIVERINE	II B 2	WETLAND	91	91							0.02			
3	E	4	474.25	474.27	U	N/A	I C 2, II B 2	UPLAND	86		86						0.02			
3	E	4	474.27	474.28	PSS1B	RIVERINE	II B 2	WETLAND	61	61							0.01			
3	E	4	474.28	474.29	PFO4/SS1B	RIVERINE	I A 2, II B 2	WETLAND	76	76							0.01			
3	E	4	474.29	474.31	PSS1B	RIVERINE	II B 2	WETLAND	81	81							0.02			
3	E	4	474.31	474.31	PFO4/SS1B	RIVERINE	I A 2, II B 2	WETLAND	34	34							0.01			
3	E	WB-W	474.31	474.32	PFO4/SS1B	RIVERINE	I A 2, II B 2	WETLAND	25	25										0.00
3	E	WB-W	474.32	474.32	PSS1B	RIVERINE	II B 2	WETLAND	28	28										0.01
3	E	WB-W	474.32	474.33	PEM1E	RIVERINE	III A 3	WETLAND	54	54										0.01
3	E	WB-W	474.33	474.34	PFO4/SS4B	FLAT - ORGANIC	I A 2, II B 2	WETLAND	13	13										0.00
3	E	4	474.34	474.47	PFO4/SS4B	FLAT - ORGANIC	I A 2, II B 2	WETLAND	680	680							0.13			
3	E	4	474.47	474.53	PEM1E	RIVERINE	III A 3	WETLAND	331	331							0.06			
3	E	4	474.53	474.66	PFO4/SS1B	FLAT - ORGANIC	I A 2, II B 2	WETLAND	678	678							0.13			
3	E	4	474.66	474.68	PSS1C	RIVERINE	II B 2, II C 2	WETLAND	121	121							0.02			
3	E	4	474.68	474.69	U	N/A	I A 2, II B 2	UPLAND	44		44						0.01			
3	E	4	474.69	474.70	PSS1C	RIVERINE	II B 2, II C 2	WETLAND	58	58							0.01			
3	E	4	474.70	474.72	U	N/A	I A 2, II B 2	UPLAND	100		100						0.02			
3	E	4	474.72	474.73	PSS1C	RIVERINE	II B 2, II C 2	WETLAND	58	58							0.01			

SPREAD	SECTION	ROW MODE	FROM MP	TO MP	NWI CODE	HGM CLASS	VIERECK	DESCRIPTION	LINEAR FEET	WETLAND FEET	UPLAND FEET	DISTURBED FEET	Comments	Mode 1 - Ice Workpad (miles)	Mode 2 - Frost Pack (miles)	Mode 3 - Timber Mats	Mode 4 - Granular Workpad	Mode 5A - Grade	Mode 5B - Mountain Grade	Stream & Flood Plain Crossings
3	E	4	474.73	474.76	U	N/A	I C 2, II B 2	UPLAND	145		145						0.03			
3	E	4	474.76	474.89	PFO4/SS1B	RIVERINE	I A 2, II B 2	WETLAND	722	722							0.14			
3	E	4	474.89	474.90	PSS1C	RIVERINE	II B 2, II C 2	WETLAND	49	49							0.01			
3	E	4	474.90	474.97	PFO4/SS1B	RIVERINE	I A 2, II B 2	WETLAND	336	336							0.06			
3	E	4	474.97	474.97	PSS1C	RIVERINE	II B 2, II C 2	WETLAND	20	20							0.00			
3	E	4	474.97	475.01	U	N/A	I A 2, II B 2	UPLAND	217		217						0.04			
3	E	4	475.01	475.03	PSS1C	RIVERINE	II B 2, II C 2	WETLAND	114	114							0.02			
3	E	4	475.03	475.40	PFO4/SS4B	FLAT - ORGANIC	I A 2, II B 2	WETLAND	1923	1923							0.36			
3	E	4	475.40	475.43	U	N/A	I C 2, I A 2	UPLAND	193		193						0.04			
3	E	4	475.43	475.44	PFO4/SS4B	FLAT - ORGANIC	I A 2, II B 2	WETLAND	54	54							0.01			
3	E	4	475.44	475.47	PSS1A	RIVERINE	II B 2, I A 3	WETLAND	143	143							0.03			
3	E	4	475.47	475.48	U	N/A	I C 2, I A 2	UPLAND	60		60						0.01			
3	E	4	475.48	475.67	PSS1A	RIVERINE	II B 2, I A 3	WETLAND	1015	1015							0.19			
3	E	4	475.67	475.68	PFO4/SS1B	FLAT - ORGANIC	I A 2, II B 2	WETLAND	4	4							0.00			
3	E	4	475.68	475.71	U	N/A	I C 2	UPLAND	183		183						0.03			
3	E	4	475.71	475.71	PFO4/SS1B	FLAT - ORGANIC	I A 2, II B 2	WETLAND	8	8							0.00			
3	E	4	475.71	475.72	PSS1A	RIVERINE	II B 2, I A 3	WETLAND	56	56							0.01			
3	E	4	475.72	475.75	PFO4/SS1B	FLAT - ORGANIC	I A 2, II B 2	WETLAND	132	132							0.02			
3	E	4	475.75	475.94	U	N/A	I A 2, II B 2	UPLAND	1015		1015						0.19			
3	E	4	475.94	476.00	U	N/A	I B 1	UPLAND	310		310						0.06			
3	E	4	476.00	476.00	U	N/A	II B 2, II C 2	UPLAND	18		18						0.00			
3	E	WB-W	476.00	476.01	U	N/A	II B 2, II C 2	UPLAND	44		44									0.01
3	E	WB-W	476.01	476.06	R2UBH	RIVERINE	NONE	WETLAND	280	280										0.05
3	E	WB-W	476.06	476.08	U	N/A	I A 2, II B 2	UPLAND	96		96									0.02
3	E	4	476.08	476.09	U	N/A	I A 2, II B 2	UPLAND	58		58						0.01			
3	E	4	476.09	476.10	PSS1/EM1C	RIVERINE	II B 2, III A 3	WETLAND	60	60							0.01			
3	E	4	476.10	476.11	PEM1/SS1E	RIVERINE	III A 3, II B 2	WETLAND	55	55							0.01			
3	E	4	476.11	476.12	U	N/A	I A 2, II B 2	UPLAND	20		20						0.00			
3	E	5A	476.12	476.14	U	N/A	I A 2, II B 2	UPLAND	97		97							0.02		
3	E	5A	476.14	476.19	PFO4/SS1B	FLAT - ORGANIC	I A 2, II B 2	WETLAND	263	263								0.05		
3	E	5A	476.19	476.23	PSS1/4B	FLAT - ORGANIC	I A 3, II B 2	WETLAND	211	211								0.04		
3	E	5A	476.23	476.23	PSS1/4B	FLAT - ORGANIC	I C 3, II B 2	WETLAND	11	11								0.00		
3	E	5A	476.23	476.24	U	N/A	I C 2	UPLAND	59		59							0.01		
3	E	5A	476.24	476.28	PSS1/4B	FLAT - ORGANIC	I C 3, II B 2	WETLAND	198	198								0.04		
3	E	5A	476.28	476.31	PSS1/4B	FLAT - ORGANIC	I A 3, II B 2	WETLAND	152	152								0.03		
3	E	5A	476.31	476.32	PSS1B	FLAT - ORGANIC	II C 2, II B 2	WETLAND	54	54								0.01		
3	E	5A	476.32	476.47	PSS1/4B	FLAT - ORGANIC	I A 3, II B 2	WETLAND	818	818								0.15		
3	E	5A	476.47	476.51	U	N/A	I A 2, II B 2	UPLAND	212		212							0.04		
3	E	5A	476.51	476.52	U	N/A	I A 2, I C 2	UPLAND	25		25							0.00		
3	E	5A	476.52	476.54	PSS1B	FLAT - ORGANIC	II B 2, II C 2	WETLAND	114	114								0.02		
3	E	5A	476.54	476.54	U	N/A	I A 2, II C 2	UPLAND	26		26							0.00		
3	E	5A	476.54	476.58	PSS1B	FLAT - ORGANIC	II B 2, II C 2	WETLAND	191	191								0.04		
3	E	5A	476.58	476.60	PSS1/4B	FLAT - ORGANIC	II B 2, I A 3	WETLAND	105	105								0.02		
3	E	5A	476.60	476.62	U	N/A	I A 2	UPLAND	112		112							0.02		
3	E	5A	476.62	476.63	PSS1/4B	FLAT - ORGANIC	II B 2, I A 3	WETLAND	68	68								0.01		
3	E	5A	476.63	476.67	U	N/A	I A 2	UPLAND	188		188							0.04		
3	E	5A	476.67	476.69	U	N/A	I C 2	UPLAND	102		102							0.02		
3	E	5A	476.69	476.70	U	N/A	I A 2	UPLAND	85		85							0.02		
3	E	5A	476.70	476.72	U	N/A	I C 2	UPLAND	67		67							0.01		
3	E	5A	476.72	476.73	PFO1/EM1C	SLOPE	I B 2, III A 2	WETLAND	75	75								0.01		
3	E	5A	476.73	476.74	U	N/A	I C 2	UPLAND	66		66							0.01		
3	E	5A	476.74	476.87	U	N/A	I A 2, I C 2	UPLAND	693		693							0.13		
3	E	5A	476.87	476.89	PEM1E	DEPRESSIONAL	III A 3	WETLAND	106	106								0.02		
3	E	5A	476.89	476.91	PFO1/EM1C	SLOPE	I B 2, III A 2	WETLAND	79	79								0.01		
3	E	5A	476.91	476.91	U	N/A	I C 2, II C 2	UPLAND	26		26							0.00		
3	E	5A	476.91	476.92	PFO1/EM1C	SLOPE	I B 2, III A 2	WETLAND	6	6								0.00		
3	E	5A	476.92	476.92	U	N/A	I C 2, II C 2	UPLAND	14		14							0.00		
3	E	5A	476.92	476.92	PFO1/EM1C	SLOPE	I B 2, III A 2	WETLAND	17	17								0.00		
3	E	5A	476.92	476.99	PSS1/FO4B	FLAT - ORGANIC	I A 3, II B 2	WETLAND	340	340								0.06		
3	E	5A	476.99	477.05	PSS1/EM1C	FLAT - ORGANIC	II B 2, III A 3	WETLAND	342	342								0.06		
3	E	5A	477.05	477.07	PFO4/1C	FLAT - ORGANIC	I C 2, II B 2	WETLAND	89	89								0.02		
3	E	5A	477.07	477.32	PSS1/EM1C	FLAT - ORGANIC	II B 2, III A 3	WETLAND	1352	1352								0.26		
3	E	5A	477.32	477.32	PFO4/1B	FLAT - ORGANIC	I C 2, II B 2	WETLAND	6	6								0.00		
3	E	5A	477.32	477.36	PSS1/EM1C	FLAT - ORGANIC	II B 2, III A 3	WETLAND	208	208								0.04		
3	E	5A	477.36	477.67	PFO4/SS4B	FLAT - ORGANIC	I A 2, II C 2	WETLAND	1635	1635								0.31		
3	E	5A	477.67	477.68	PSS1/EM1B	DEPRESSIONAL	II C 2, III A 2	WETLAND	47	47								0.01		
3	E	5A	477.68	477.74	PSS4/1B	FLAT - ORGANIC	II A 2, II C 2	WETLAND	302	302								0.06		
3	E	5A	477.74	477.78	PSS1/EM1B	FLAT - ORGANIC	II C 2, II B 2	WETLAND	203	203								0.04		
3	E	5A	477.78	477.83	PEM1/SS1C	DEPRESSIONAL	III A 2, II C 2	WETLAND	297	297								0.06		
3	E	5A	477.83	477.86	PSS4/1B	FLAT - ORGANIC	II A 2, II C 2	WETLAND	125	125								0.02		
3	E	5A	477.86	477.94	U	N/A	I A 2	UPLAND	424		424							0.08		
3	E	5A	477.94	477.95	PFO4/1B	FLAT - ORGANIC	I C 2	WETLAND	74	74								0.01		

SPREAD	SECTION	ROW MODE	FROM MP	TO MP	NWI CODE	HGM CLASS	VIERECK	DESCRIPTION	LINEAR FEET	WETLAND FEET	UPLAND FEET	DISTURBED FEET	Comments	Mode 1 - Ice Workpad (miles)	Mode 2 - Frost Pack (miles)	Mode 3 - Timber Mats	Mode 4 - Granular Workpad	Mode 5A - Grade	Mode 5B - Mountain Grade	Stream & Flood Plain Crossings
3	E	5A	477.95	477.99	PFO4/SS1B	FLAT - ORGANIC	I A 2	WETLAND	208	208								0.04		
3	E	5A	477.99	478.01	U	N/A	I A 2	UPLAND	79		79							0.02		
3	E	5A	478.01	478.04	U	N/A	I C 2	UPLAND	171		171							0.03		
3	E	5A	478.04	478.08	PFO1/4B	FLAT - ORGANIC	I C 2, II B 2	WETLAND	214	214								0.04		
3	E	5A	478.08	478.13	PFO4/SS1B	FLAT - ORGANIC	I A 2	WETLAND	274	274								0.05		
3	E	5A	478.13	478.18	PSS4/1B	FLAT - ORGANIC	I C 2	WETLAND	270	270								0.05		
3	E	5A	478.18	478.19	U	N/A	I A 2	UPLAND	24		24							0.00		
3	E	5A	478.19	478.19	PSS1/4B	FLAT - ORGANIC	I A 3, II B 2	WETLAND	32	32								0.01		
3	E	5A	478.19	478.20	U	N/A	I A 2	UPLAND	56		56							0.01		
3	E	5A	478.20	478.22	PSS1/4B	FLAT - ORGANIC	I A 3, II B 2	WETLAND	65	65								0.01		
3	E	5A	478.22	478.24	U	N/A	I A 2	UPLAND	108		108							0.02		
3	E	5A	478.24	478.29	PSS4/FO4B	FLAT - ORGANIC	I A 2, II C 2	WETLAND	282	282								0.05		
3	E	5A	478.29	478.31	PSS1/EM1B	DEPRESSIONAL	II C 1	WETLAND	84	84								0.02		
3	E	5A	478.31	478.31	PSS4/FO4B	FLAT - ORGANIC	I A 2, II C 2	WETLAND	10	10								0.00		
3	E	5A	478.31	478.31	PSS1/EM1B	DEPRESSIONAL	II C 1	WETLAND	32	32								0.01		
3	E	5A	478.31	478.34	PSS4/FO4B	FLAT - ORGANIC	I A 2, II C 2	WETLAND	160	160								0.03		
3	E	5A	478.34	478.38	PSS1B	FLAT - ORGANIC	II C 2, I A 3	WETLAND	181	181								0.03		
3	E	5A	478.38	478.43	PSS4/FO4B	FLAT - ORGANIC	I A 2, II C 2	WETLAND	293	293								0.06		
3	E	5A	478.43	478.47	U	N/A	I C 2, I A 2	UPLAND	217		217							0.04		
3	E	5A	478.47	478.49	PSS4/FO4B	FLAT - ORGANIC	I A 2, II C 2	WETLAND	61	61								0.01		
3	E	5A	478.49	478.49	U	N/A	I C 2, I A 2	UPLAND	22		22							0.00		
3	E	WB-W	478.49	478.49	U	N/A	I C 2, I A 2	UPLAND	6		6									0.00
3	E	WB-W	478.49	478.50	PEM1/SS1E	SLOPE	III A 3, II C 2	WETLAND	69	69										0.01
3	E	WB-W	478.50	478.51	U	N/A	I C 2, I A 2	UPLAND	15		15									0.00
3	E	5A	478.51	478.52	U	N/A	I C 2, I A 2	UPLAND	58		58							0.01		
3	E	5A	478.52	478.54	PFO4/SS4B	FLAT - ORGANIC	I A 2, II C 2	WETLAND	118	118								0.02		
3	E	5A	478.54	478.57	U	N/A	I C 2, II B 2	UPLAND	145		145							0.03		
3	E	5A	478.57	478.60	PFO4/SS4B	FLAT - ORGANIC	I A 2, II C 2	WETLAND	181	181								0.03		
3	E	5A	478.60	478.61	U	N/A	I C 2, II B 2	UPLAND	62		62							0.01		
3	E	5A	478.61	478.64	PFO4/SS4B	FLAT - ORGANIC	I A 2, II C 2	WETLAND	146	146								0.03		
3	E	5A	478.64	478.85	PSS1/EM1B	FLAT - ORGANIC	II C 2, III A 2	WETLAND	1089	1089								0.21		
3	E	5A	478.85	478.92	PFO4/SS4B	FLAT - ORGANIC	I A 2, II C 2	WETLAND	403	403								0.08		
3	E	5A	478.92	478.94	U	N/A	I C 2, II B 2	UPLAND	100		100							0.02		
3	E	5A	478.94	478.97	PFO4/SS4B	FLAT - ORGANIC	I A 2, II C 2	WETLAND	163	163								0.03		
3	E	5A	478.97	479.20	PSS1/EM1B	FLAT - ORGANIC	II C 2, III A 2	WETLAND	1209	1209								0.23		
3	E	5A	479.20	479.27	PSS1/FO4B	FLAT - ORGANIC	II C 1, I A 3	WETLAND	352	352								0.07		
3	E	5A	479.27	479.27	PFO4/SS4B	FLAT - ORGANIC	I A 2, II B 2	WETLAND	12	12								0.00		
3	E	5A	479.27	479.30	U	N/A	I C 2, II B 2	UPLAND	119		119							0.02		
3	E	5A	479.30	479.32	PFO4/SS4B	FLAT - ORGANIC	I A 2, II B 2	WETLAND	144	144								0.03		
3	E	5A	479.32	479.34	PSS1/FO4B	FLAT - ORGANIC	II C 1, I A 3	WETLAND	97	97								0.02		
3	E	5A	479.34	479.41	PFO4/SS4B	FLAT - ORGANIC	I A 2, II B 2	WETLAND	371	371								0.07		
3	E	5A	479.41	479.49	U	N/A	I A 2, II B 2	UPLAND	424		424							0.08		
3	E	5A	479.49	479.53	PFO4/SS4B	FLAT - ORGANIC	I A 2, II B 2	WETLAND	227	227								0.04		
3	E	5A	479.53	479.54	U	N/A	I C 2	UPLAND	56		56							0.01		
3	E	5A	479.54	479.56	PEM1/SS1B	DEPRESSIONAL	III A 2, II C 2	WETLAND	56	56								0.01		
3	E	5A	479.56	479.58	U	N/A	I C 2	UPLAND	117		117							0.02		
3	E	5A	479.58	479.62	PSS1/FO4B	FLAT - ORGANIC	II C 1, I A 3	WETLAND	227	227								0.04		
3	E	5A	479.62	479.64	U	N/A	I C 2	UPLAND	82		82							0.02		
3	E	5A	479.64	479.65	PSS1/FO4B	FLAT - ORGANIC	II C 1, I A 3	WETLAND	81	81								0.02		
3	E	5A	479.65	479.68	U	N/A	I C 2	UPLAND	136		136							0.03		
3	E	5A	479.68	479.73	PSS1/FO4B	FLAT - ORGANIC	II C 1, I A 3	WETLAND	275	275								0.05		
3	E	5A	479.73	479.75	PFO4/SS4B	FLAT - ORGANIC	I A 2, II B 2	WETLAND	119	119								0.02		
3	E	5A	479.75	479.76	PSS1/FO4B	FLAT - ORGANIC	II C 1, I A 3	WETLAND	53	53								0.01		
3	E	5A	479.76	479.82	PFO4/SS4B	FLAT - ORGANIC	I A 2, II B 2	WETLAND	327	327								0.06		
3	E	5A	479.82	479.85	PEM1/SS1B	DEPRESSIONAL	III A 2, II C 2	WETLAND	120	120								0.02		
3	E	5A	479.85	479.99	PFO4/SS4B	FLAT - ORGANIC	I A 2, II B 2	WETLAND	741	741								0.14		
3	E	5A	479.99	480.12	U	N/A	I A 2, II B 2	UPLAND	696		696							0.13		
3	E	5A	480.12	480.12	PFO4/SS4B	FLAT - ORGANIC	I A 2, II B 2	WETLAND	29	29								0.01		
3	E	5A	480.12	480.16	U	N/A	I A 2, II B 2	UPLAND	185		185							0.04		
3	E	5A	480.16	480.35	PFO4/SS4B	FLAT - ORGANIC	I A 2, II B 2	WETLAND	988	988								0.19		
3	E	5A	480.35	480.63	U	N/A	I A 2, II B 2	UPLAND	1515		1515							0.29		
3	E	5A	480.63	480.68	PFO4/SS1B	FLAT - ORGANIC	I C 2, II B 2	WETLAND	253	253								0.05		
3	E	5A	480.68	480.70	U	N/A	I A 2, II B 2	UPLAND	83		83							0.02		
3	E	5A	480.70	480.89	PFO4/SS1B	FLAT - ORGANIC	I C 2, II B 2	WETLAND	995	995								0.19		
3	E	5A	480.89	481.23	PSS1/EM1E	FLAT - ORGANIC	II C 1, III A 2	WETLAND	1807	1807								0.34		
3	E	5A	481.23	481.24	PEM1B	DEPRESSIONAL	III A 2	WETLAND	88	88								0.02		
3	E	5A	481.24	481.41	PSS1/EM1E	FLAT - ORGANIC	II C 1, III A 2	WETLAND	898	898								0.17		
3	E	5A	481.41	481.54	PFO4/SS1B	FLAT - ORGANIC	I C 2, II B 2	WETLAND	676	676								0.13		
3	E	5A	481.54	481.55	PFO1/4B	FLAT - ORGANIC	I C 2, II B 2	WETLAND	65	65								0.01		
3	E	5A	481.55	481.58	U	N/A	I C 2, II B 2	UPLAND	148		148							0.03		
3	E	5A	481.58	481.67	PFO1/4B	FLAT - ORGANIC	I C 2, II B 2	WETLAND	435	435								0.08		
3	E	5A	481.67	481.71	PSS1B	FLAT - ORGANIC	II C 1	WETLAND	231	231								0.04		

SPREAD	SECTION	ROW MODE	FROM MP	TO MP	NWI CODE	HGM CLASS	VIERECK	DESCRIPTION	LINEAR FEET	WETLAND FEET	UPLAND FEET	DISTURBED FEET	Comments	Mode 1 - Ice Workpad (miles)	Mode 2 - Frost Pack (miles)	Mode 3 - Timber Mats	Mode 4 - Granular Workpad	Mode 5A - Grade	Mode 5B - Mountain Grade	Stream & Flood Plain Crossings
3	E	5A	481.71	481.75	PSS1/EM1E	FLAT - ORGANIC	II B 2, III A 2	WETLAND	207	207								0.04		
3	E	5A	481.75	481.87	PSS1B	FLAT - ORGANIC	II C 1	WETLAND	637	637								0.12		
3	E	5A	481.87	481.88	PSS1/EM1B	SLOPE	II C 1, III A 2	WETLAND	61	61								0.01		
3	E	5A	481.88	481.89	PSS1B	FLAT - ORGANIC	II C 1	WETLAND	39	39								0.01		
3	E	5A	481.89	481.90	PSS1/EM1B	SLOPE	II C 1, III A 2	WETLAND	45	45								0.01		
3	E	5A	481.90	481.95	PSS1B	FLAT - ORGANIC	II C 1	WETLAND	300	300								0.06		
3	E	5A	481.95	482.01	PFO4/SS4B	FLAT - ORGANIC	I A 2, II B 2	WETLAND	295	295								0.06		
3	E	5A	482.01	482.02	PSS1B	FLAT - ORGANIC	II C 1	WETLAND	81	81								0.02		
3	E	5A	482.02	482.26	PFO4/SS4B	FLAT - ORGANIC	I A 2, II B 2	WETLAND	1251	1251								0.24		
3	E	5A	482.26	482.29	PSS1/FO4B	FLAT - ORGANIC	II B 2, I A 3	WETLAND	173	173								0.03		
3	E	5A	482.29	482.38	PFO4/SS4B	FLAT - ORGANIC	I A 2, II B 2	WETLAND	453	453								0.09		
3	E	5A	482.38	482.41	PSS1/FO4B	FLAT - ORGANIC	II B 2, I A 3	WETLAND	183	183								0.03		
3	E	5A	482.41	482.44	PEM1/SS1E	DEPRESSIONAL	II B 2, III A 3	WETLAND	134	134								0.03		
3	E	5A	482.44	482.45	PEM1/SS1E	DEPRESSIONAL	II A 2, II C 2	WETLAND	34	34								0.01		
3	E	5A	482.45	482.45	PEM1/SS1E	DEPRESSIONAL	II B 2, III A 3	WETLAND	32	32								0.01		
3	E	5A	482.45	482.53	PSS1/FO4B	FLAT - ORGANIC	I A 2, II B 2	WETLAND	418	418								0.08		
3	E	5A	482.53	482.61	PSS1/EM1C	FLAT - ORGANIC	II B 2, III A 3	WETLAND	397	397								0.08		
3	E	5A	482.61	482.64	PEM1E	DEPRESSIONAL	III A 3	WETLAND	197	197								0.04		
3	E	5A	482.64	482.65	PEM1/SS1E	DEPRESSIONAL	II B 2, III A 3	WETLAND	56	56								0.01		
3	E	5A	482.65	482.67	PSS1/EM1B	FLAT - ORGANIC	II B 2, III A 3	WETLAND	96	96								0.02		
3	E	5A	482.67	482.73	PSS1/EM1C	FLAT - ORGANIC	II B 2, III A 3	WETLAND	288	288								0.05		
3	E	5A	482.73	482.74	PSS1/EM1B	FLAT - ORGANIC	II B 2, III A 3	WETLAND	91	91								0.02		
3	E	5A	482.74	482.78	PFO4/1B	FLAT - ORGANIC	I C 2, II B 2	WETLAND	184	184								0.03		
3	E	5A	482.78	482.79	PFO1/SS1B	FLAT - ORGANIC	I B 2, II B 2	WETLAND	68	68								0.01		
3	E	5A	482.79	482.82	PFO4/1B	FLAT - ORGANIC	I C 2, II B 2	WETLAND	140	140								0.03		
3	E	5A	482.82	482.89	PSS1/EM1B	FLAT - ORGANIC	II B 2, III A 3	WETLAND	390	390								0.07		
3	E	5A	482.89	483.02	PEM1/SS1E	DEPRESSIONAL	II A 2, II C 2	WETLAND	689	689								0.13		
3	E	5A	483.02	483.03	PFO1/SS1B	FLAT - ORGANIC	I B 2, II B 2	WETLAND	28	28								0.01		
3	E	5A	483.03	483.05	U	N/A	I B 2, II B 2	UPLAND	140		140							0.03		
3	E	5A	483.05	483.10	PFO4/SS1B	FLAT - ORGANIC	I A 2	WETLAND	220	220								0.04		
3	E	5A	483.10	483.11	U	N/A	I B 2, II B 2	UPLAND	78		78							0.01		
3	E	5A	483.11	483.17	PFO4/SS1B	FLAT - ORGANIC	I A 2	WETLAND	323	323								0.06		
3	E	5A	483.17	483.25	U	N/A	I B 2, II B 2	UPLAND	399		399							0.08		
3	E	5A	483.25	483.26	U	N/A	I C 2, I A 2	UPLAND	80		80							0.02		
3	E	5A	483.26	483.27	U	N/A	I B 2, II B 2	UPLAND	28		28							0.01		
3	E	5A	483.27	483.29	U	N/A	I B 2, II B 2	UPLAND	99		99							0.02		
3	E	5A	483.29	483.29	U	N/A	I B 2, II B 2	UPLAND	33		33							0.01		
3	E	5A	483.29	483.39	U	N/A	I B 2, II B 2	UPLAND	503		503							0.10		
3	E	5A	483.39	483.39	U	N/A	I B 2, II B 2	UPLAND	5		5							0.00		
3	E	WB-W	483.39	483.41	U	N/A	I B 2, II B 2	UPLAND	90		90									0.02
3	E	5A	483.41	483.41	U	N/A	I B 2, II B 2	UPLAND	10		10							0.00		
3	E	5A	483.41	483.68	U	N/A	I C 2, I A 2	UPLAND	1451		1451							0.27		
3	E	5A	483.68	483.70	PFO4/SS4B	FLAT - ORGANIC	I A 2, II C 2	WETLAND	74	74								0.01		
3	E	5A	483.70	483.80	U	N/A	I C 2, I A 2	UPLAND	557		557							0.11		
3	E	5A	483.80	483.82	U	N/A	I A 2, II C 2	UPLAND	84		84							0.02		
3	E	5A	483.82	484.43	U	N/A	I C 2, I A 2	UPLAND	3239		3239							0.61		
3	E	5A	484.43	484.49	U	N/A	I A 2	UPLAND	305		305							0.06		
3	E	5A	484.49	484.63	U	N/A	I C 2, II B 2	UPLAND	760		760							0.14		
3	E	5A	484.63	484.65	PFO4/SS1B	FLAT - ORGANIC	I A 2	WETLAND	60	60								0.01		
3	E	5A	484.65	484.73	U	N/A	I A 2	UPLAND	429		429							0.08		
3	E	5A	484.73	484.76	PFO4/SS1B	FLAT - ORGANIC	I A 2	WETLAND	182	182								0.03		
3	E	5A	484.76	484.84	U	N/A	I C 2, II B 2	UPLAND	413		413							0.08		
3	E	5A	484.84	484.86	U	N/A	I C 3, II B 2	UPLAND	134		134							0.03		
3	E	5A	484.86	484.92	U	N/A	I C 2, II B 2	UPLAND	318		318							0.06		
3	E	5A	484.92	485.00	U	N/A	I C 3, II B 2	UPLAND	405		405							0.08		
3	E	5A	485.00	485.04	U	N/A	I C 2, II B 2	UPLAND	192		192							0.04		
3	E	5A	485.04	485.38	U	N/A	I A 2	UPLAND	1804		1804							0.34		
3	E	5A	485.38	485.49	U	N/A	I C 2	UPLAND	562		562							0.11		
3	E	5A	485.49	485.50	U	N/A	I C 2	UPLAND	95		95							0.02		
3	E	WB-W	485.50	485.51	U	N/A	I C 2	UPLAND	11		11									0.00
3	E	WB-W	485.51	485.52	PEM1/SS1Eb	RIVERINE	III A 3, II C 2	WETLAND	55	55										0.01
3	E	WB-W	485.52	485.52	U	N/A	I C 2	UPLAND	24		24									0.00
3	E	5A	485.52	485.54	U	N/A	I C 2	UPLAND	80		80							0.02		
3	E	5A	485.54	485.55	U	N/A	I C 2	UPLAND	58		58							0.01		
3	E	5A	485.55	485.58	U	N/A	I C 2	UPLAND	178		178							0.03		
3	E	5A	485.58	485.70	U	N/A	I A 2	UPLAND	639		639							0.12		
3	E	5A	485.70	485.80	U	N/A	I C 2	UPLAND	495		495							0.09		
3	E	5A	485.80	485.83	U	N/A	I A 2	UPLAND	184		184							0.03		
3	E	5A	485.83	485.84	U	N/A	I C 2	UPLAND	65		65							0.01		
3	E	5A	485.84	486.02	U	N/A	I A 2	UPLAND	953		953							0.18		
3	E	5A	486.02	486.04	U	N/A	I C 2	UPLAND	108		108							0.02		
3	E	5A	486.04	486.59	U	N/A	I A 2	UPLAND	2899		2899							0.55		

SPREAD	SECTION	ROW MODE	FROM MP	TO MP	NWI CODE	HGM CLASS	VIERECK	DESCRIPTION	LINEAR FEET	WETLAND FEET	UPLAND FEET	DISTURBED FEET	Comments	Mode 1 - Ice Workpad (miles)	Mode 2 - Frost Pack (miles)	Mode 3 - Timber Mats	Mode 4 - Granular Workpad	Mode 5A - Grade	Mode 5B - Mountain Grade	Stream & Flood Plain Crossings
3	E	5A	486.59	486.65	U	N/A	I C 2, II B 2	UPLAND	285		285							0.05		
3	E	5A	486.65	486.74	U	N/A	I A 2	UPLAND	487		487							0.09		
3	E	5A	486.74	486.85	U	N/A	I C 2, II B 2	UPLAND	612		612							0.12		
3	E	5A	486.85	486.90	U	N/A	I A 2	UPLAND	218		218							0.04		
3	E	5A	486.90	486.91	U	N/A	I C 2, II B 2	UPLAND	90		90							0.02		
3	E	WB-W	486.91	486.91	U	N/A	I C 2, II B 2	UPLAND	11		11									0.00
3	E	WB-W	486.91	486.92	PSS1/EM1C	RIVERINE	II B 2, III A 2	WETLAND	16	16										0.00
3	E	WB-W	486.92	486.92	U	N/A	I C 2, II B 2	UPLAND	25		25									0.00
3	E	WB-W	486.92	486.92	U	N/A	I A 2	UPLAND	8		8									0.00
3	E	5A	486.92	487.09	U	N/A	I A 2	UPLAND	862		862							0.16		
3	E	5A	487.09	487.36	U	N/A	I C 2, II B 2	UPLAND	1441		1441							0.27		
3	E	5A	487.36	487.40	U	N/A	I A 3, II C 2	UPLAND	201		201							0.04		
3	E	5A	487.40	487.42	U	N/A	I C 2, II C 2	UPLAND	133		133							0.03		
3	E	5A	487.42	487.52	U	N/A	I A 3, II C 2	UPLAND	522		522							0.10		
3	E	5A	487.52	487.54	U	N/A	I C 2, II C 2	UPLAND	97		97							0.02		
3	E	5A	487.54	487.57	U	N/A	I A 3, II C 2	UPLAND	152		152							0.03		
3	E	5A	487.57	487.74	U	N/A	I C 2, II C 2	UPLAND	899		899							0.17		
3	E	5A	487.74	487.77	U	N/A	I A 3, II C 2	UPLAND	151		151							0.03		
3	E	5A	487.77	487.82	U	N/A	I C 2, II C 2	UPLAND	271		271							0.05		
3	E	5A	487.82	487.84	U	N/A	I A 3, II C 2	UPLAND	92		92							0.02		
3	E	5A	487.84	487.86	U	N/A	I C 2, II C 2	UPLAND	122		122							0.02		
3	E	5A	487.86	487.94	U	N/A	I A 3, II C 2	UPLAND	397		397							0.08		
3	E	5A	487.94	487.99	U	N/A	I C 2, II C 2	UPLAND	302		302							0.06		
3	E	5A	487.99	488.03	U	N/A	I A 3, II C 2	UPLAND	177		177							0.03		
3	E	5A	488.03	488.04	PSS1/EM1C	DEPRESSIONAL	II B 2, III A 2	WETLAND	47	47								0.01		
3	E	5A	488.04	488.13	U	N/A	I A 3, II C 2	UPLAND	486		486							0.09		
3	E	5A	488.13	488.14	U	N/A	I A 2, II C 2	UPLAND	48		48							0.01		
3	E	5A	488.14	488.58	U	N/A	I A 3, II C 2	UPLAND	2321		2321							0.44		
3	E	5A	488.58	488.58	U	N/A	I A 2, II C 2	UPLAND	41		41							0.01		
3	E	5A	488.58	488.60	U	N/A	I A 3, II C 2	UPLAND	109		109							0.02		
3	E	5A	488.60	488.68	U	N/A	I A 2, II C 2	UPLAND	394		394							0.07		
3	E	5A	488.68	488.98	U	N/A	I A 3, II C 2	UPLAND	1578		1578							0.30		
3	E	5A	488.98	489.10	U	N/A	I A 2, II C 2	UPLAND	620		620							0.12		
3	E	5A	489.10	489.11	U	N/A	I C 2, II B 2	UPLAND	91		91							0.02		
3	E	WB-W	489.11	489.12	U	N/A	I C 2, II B 2	UPLAND	25		25									0.00
3	E	WB-W	489.12	489.12	PSS1A	RIVERINE	II B 2, II C 2	WETLAND	27	27										0.01
3	E	WB-W	489.12	489.13	R4SBC	RIVERINE	II B 1, II C 2	WETLAND	42	42										0.01
3	E	WB-W	489.13	489.14	U	N/A	I C 2, II B 2	UPLAND	27		27									0.01
3	E	5A	489.14	489.14	U	N/A	I C 2, II B 2	UPLAND	41		41							0.01		
3	E	5A	489.14	489.15	R4SBC	RIVERINE	NONE	WETLAND	21	21								0.00		
3	E	5A	489.15	489.16	PSS1C	RIVERINE	II B 2, II C 2	WETLAND	43	43								0.01		
3	E	5A	489.16	489.19	PSS1/EM1A	RIVERINE	II C 2, III A 2	WETLAND	170	170								0.03		
3	E	5A	489.19	489.19	PSS1C	RIVERINE	II B 2, II C 2	WETLAND	23	23								0.00		
3	E	5A	489.19	489.20	PSS1/EM1A	RIVERINE	II C 2, III A 2	WETLAND	32	32								0.01		
3	E	WB-W	489.20	489.21	PSS1/EM1A	RIVERINE	II C 2, III A 2	WETLAND	43	43										0.01
3	E	WB-W	489.21	489.22	R3UBH	RIVERINE	NONE	WETLAND	52	52										0.01
3	E	WB-W	489.22	489.23	U	N/A	I B 2, II B 2	UPLAND	70		70									0.01
3	E	5A	489.23	489.26	U	N/A	I B 2, II B 2	UPLAND	166		166							0.03		
3	E	5A	489.26	489.27	PSS1A	RIVERINE	II B 2, II C 2	WETLAND	38	38								0.01		
3	E	5A	489.27	489.30	U	N/A	I B 2, II B 2	UPLAND	153		153							0.03		
3	E	5A	489.30	489.38	U	N/A	I C 2	UPLAND	424		424							0.08		
3	E	5A	489.38	489.38	U	N/A	I C 1	UPLAND	27		27							0.01		
3	F	5A	489.38	489.66	U	N/A	I C 1	UPLAND	1463		1463							0.28		
3	F	5A	489.66	489.80	U	N/A	I A 2, II B 2	UPLAND	721		721							0.14		
3	F	5A	489.80	489.82	U	N/A	I C 1	UPLAND	116		116							0.02		
3	F	5A	489.82	489.87	U	N/A	I A 2, II B 2	UPLAND	266		266							0.05		
3	F	5A	489.87	489.99	U	N/A	I A 2	UPLAND	642		642							0.12		
3	F	5A	489.99	490.03	PFO4/SS4B	FLAT - ORGANIC	I A 2	WETLAND	193	193								0.04		
3	F	5A	490.03	490.33	U	N/A	I A 2	UPLAND	1590		1590							0.30		
3	F	5A	490.33	490.44	PFO4/SS4B	FLAT - ORGANIC	I A 2	WETLAND	565	565								0.11		
3	F	5A	490.44	490.70	U	N/A	I A 2, II B 2	UPLAND	1385		1385							0.26		
3	F	5A	490.70	491.57	U	N/A	I C 1, I B 1	UPLAND	4625		4625							0.88		
3	F	5A	491.57	491.59	U	N/A	I A 2	UPLAND	108		108							0.02		
3	F	5A	491.59	492.27	U	N/A	I C 1, I B 1	UPLAND	3569		3569							0.68		
3	F	5A	492.27	492.31	U	N/A	I A 2, II C 2	UPLAND	191		191							0.04		
3	F	5A	492.31	492.49	U	N/A	I C 1, I B 1	UPLAND	969		969							0.18		
3	F	5A	492.49	492.65	U	N/A	I A 2, II C 2	UPLAND	864		864							0.16		
3	F	5A	492.65	493.35	U	N/A	I C 1, I B 1	UPLAND	3697		3697							0.70		
3	F	5A	493.35	493.48	PFO4/SS1B	FLAT - ORGANIC	I A 2, II C 2	WETLAND	674	674								0.13		
3	F	5A	493.48	493.52	U	N/A	I C 1, I B 1	UPLAND	193		193							0.04		
3	F	5A	493.52	493.56	PFO4/SS1B	FLAT - ORGANIC	I A 2, II C 2	WETLAND	209	209								0.04		
3	F	5A	493.56	493.56	U	N/A	I C 1, I B 1	UPLAND	1		1							0.00		

SPREAD	SECTION	ROW MODE	FROM MP	TO MP	NWI CODE	HGM CLASS	VIERECK	DESCRIPTION	LINEAR FEET	WETLAND FEET	UPLAND FEET	DISTURBED FEET	Comments	Mode 1 - Ice Workpad (miles)	Mode 2 - Frost Pack (miles)	Mode 3 - Timber Mats	Mode 4 - Granular Workpad	Mode 5A - Grade	Mode 5B - Mountain Grade	Stream & Flood Plain Crossings
3	F	5A	493.56	493.72	PFO4/SS1B	FLAT - ORGANIC	I A 2, II C 2	WETLAND	882	882								0.17		
3	F	5A	493.72	493.93	U	N/A	I C 1, I B 1	UPLAND	1091		1091							0.21		
3	F	5A	493.93	493.95	U	N/A	II C 2	UPLAND	105		105							0.02		
3	F	5A	493.95	494.10	U	N/A	I C 1, I B 1	UPLAND	787		787							0.15		
3	F	5A	494.10	494.22	U	N/A	I B 1	UPLAND	616		616							0.12		
3	F	5A	494.22	494.24	U	N/A	II B 1, I B 3	UPLAND	129		129							0.02		
3	F	5A	494.24	494.28	U	N/A	I B 1	UPLAND	206		206							0.04		
3	F	5A	494.28	494.29	U	N/A	II B 1, I B 3	UPLAND	61		61							0.01		
3	F	5A	494.29	494.32	U	N/A	I C 1, I B 1	UPLAND	155		155							0.03		
3	F	5A	494.32	494.36	U	N/A	II B 1, I B 3	UPLAND	205		205							0.04		
3	F	5A	494.36	494.42	PFO4/SS4B	FLAT - ORGANIC	I A 2, II C 2	WETLAND	295	295								0.06		
3	F	5A	494.42	494.44	PFO4/SS1B	FLAT - ORGANIC	I A 2, II C 2	WETLAND	155	155								0.03		
3	F	5A	494.44	494.45	PSS1A	RIVERINE	II C 2	WETLAND	13	13								0.00		
3	F	5A	494.45	494.45	PFO4/SS4B	FLAT - ORGANIC	I A 2, II C 2	WETLAND	35	35								0.01		
3	F	5A	494.45	494.47	PFO4/SS4B	FLAT - ORGANIC	I A 2, II C 2	WETLAND	65	65								0.01		
3	F	5A	494.47	494.48	PFO4/SS1B	FLAT - ORGANIC	I A 2, II C 2	WETLAND	84	84								0.02		
3	F	5A	494.48	494.50	PFO4/SS4B	FLAT - ORGANIC	I A 2, II C 2	WETLAND	69	69								0.01		
3	F	5A	494.50	494.55	PFO4/SS1B	FLAT - ORGANIC	I A 2, II C 2	WETLAND	304	304								0.06		
3	F	5A	494.55	494.58	U	N/A	I C 2	UPLAND	152		152							0.03		
3	F	5A	494.58	494.62	U	N/A	I B 1, I C 1	UPLAND	203		203							0.04		
3	F	5A	494.62	494.63	U	N/A	I A 2	UPLAND	29		29							0.01		
3	F	5A	494.63	494.64	U	N/A	I B 1, I C 1	UPLAND	53		53							0.01		
3	F	5A	494.64	494.66	U	N/A	I A 2	UPLAND	115		115							0.02		
3	F	5A	494.66	494.71	PFO4/SS4B	FLAT - ORGANIC	I A 2, II C 2	WETLAND	300	300								0.06		
3	F	5A	494.71	494.75	U	N/A	I A 2	UPLAND	163		163							0.03		
3	F	5A	494.75	494.76	PSS1/EM1C	RIVERINE	I B 2, II A 2	WETLAND	60	60								0.01		
3	F	5A	494.76	494.78	U	N/A	I B 2, II B 2	UPLAND	145		145							0.03		
3	F	5A	494.78	494.82	U	N/A	I B 1	UPLAND	208		208							0.04		
3	F	5A	494.82	494.84	U	N/A	I A 2, II C 2	UPLAND	105		105							0.02		
3	F	5A	494.84	494.86	PSS1B	FLAT - ORGANIC	I B 2, I C 1	WETLAND	72	72								0.01		
3	F	5A	494.86	494.87	U	N/A	I A 2, II C 2	UPLAND	78		78							0.01		
3	F	5A	494.87	494.88	PSS1/EM1C	RIVERINE	I B 2, II A 2	WETLAND	30	30								0.01		
3	F	5A	494.88	494.90	U	N/A	I C 2, I A 2	UPLAND	112		112							0.02		
3	F	5A	494.90	494.99	PSS4/1B	FLAT - ORGANIC	I A 2, II C 1	WETLAND	502	502								0.10		
3	F	5A	494.99	495.01	U	N/A	I A 2	UPLAND	78		78							0.01		
3	F	5A	495.01	495.01	PSS4/1B	FLAT - ORGANIC	I A 2, II C 1	WETLAND	26	26								0.00		
3	F	5A	495.01	495.04	U	N/A	I A 2	UPLAND	147		147							0.03		
3	F	5A	495.04	495.04	PSS1/EM1C	RIVERINE	I B 2, II A 2	WETLAND	18	18								0.00		
3	F	5A	495.04	495.19	U	N/A	I A 2	UPLAND	784		784							0.15		
3	F	5A	495.19	495.26	U	N/A	I C 2	UPLAND	358		358							0.07		
3	F	5A	495.26	495.29	U	N/A	I A 2	UPLAND	177		177							0.03		
3	F	5A	495.29	495.53	U	N/A	I C 2	UPLAND	1232		1232							0.23		
3	F	5A	495.53	495.53	U	N/A	II B 2, II C 1	UPLAND	33		33							0.01		
3	F	5A	495.53	495.61	PSS1B	FLAT - ORGANIC	II C 2	WETLAND	427	427								0.08		
3	F	5A	495.61	495.98	U	N/A	II B 1	UPLAND	1920		1920							0.36		
3	F	5A	495.98	495.98	U	N/A	II B 2, I B 3	UPLAND	9		9							0.00		
3	F	5A	495.98	496.03	U	N/A	II B 1	UPLAND	254		254							0.05		
3	F	5A	496.03	496.03	U	N/A	II B 2, I B 3	UPLAND	35		35							0.01		
3	F	5A	496.03	496.04	PSS1/EM1B	FLAT - ORGANIC	II C 2, II A 2	WETLAND	40	40								0.01		
3	F	5A	496.04	496.08	U	N/A	II B 2, I B 3	UPLAND	210		210							0.04		
3	F	5A	496.08	496.11	U	N/A	II B 1	UPLAND	134		134							0.03		
3	F	5A	496.11	496.11	U	N/A	II B 2, I B 3	UPLAND	19		19							0.00		
3	F	5A	496.11	496.11	PEM1C	DEPRESSIONAL	III A 2	WETLAND	4	4								0.00		
3	F	5A	496.11	496.13	PSS1/EM1B	FLAT - ORGANIC	II C 2, III A 2	WETLAND	118	118								0.02		
3	F	5A	496.13	496.14	U	N/A	II B 2	UPLAND	24		24							0.00		
3	F	5A	496.14	496.26	PSS1/EM1B	FLAT - ORGANIC	II C 2, III A 2	WETLAND	640	640								0.12		
3	F	5A	496.26	496.31	PSS3/1B	FLAT - ORGANIC	II D 2, II C 2	WETLAND	245	245								0.05		
3	F	5A	496.31	496.62	U	N/A	I B 2, II B 2	UPLAND	1652		1652							0.31		
3	F	5A	496.62	496.63	PSS1B	FLAT - ORGANIC	II C 2, II B 2	WETLAND	63	63								0.01		
3	F	5A	496.63	496.64	U	N/A	I B 2, II B 2	UPLAND	52		52							0.01		
3	F	5A	496.64	496.68	PSS1B	FLAT - ORGANIC	II C 2, II B 2	WETLAND	195	195								0.04		
3	F	5A	496.68	496.72	PSS1B	FLAT - ORGANIC	II C 2, II B 2	WETLAND	247	247								0.05		
3	F	5A	496.72	496.73	PSS1B	FLAT - ORGANIC	II C 2, II B 2	WETLAND	49	49								0.01		
3	F	5A	496.73	496.74	PSS1B	FLAT - ORGANIC	II C 2, II B 2	WETLAND	43	43								0.01		
3	F	5A	496.74	496.75	U	N/A	I B 2, II B 2	UPLAND	35		35							0.01		
3	F	5A	496.75	496.85	PSS1B	FLAT - ORGANIC	II C 2, II B 2	WETLAND	516	516								0.10		
3	F	5A	496.85	497.08	U	N/A	I C 2	UPLAND	1244		1244							0.24		
3	F	5A	497.08	497.15	U	N/A	I C 2	UPLAND	361		361							0.07		
3	F	5A	497.15	497.28	U	N/A	I A 2	UPLAND	685		685							0.13		
3	F	5A	497.28	497.37	PSS1B	FLAT - ORGANIC	II B 1	WETLAND	470	470								0.09		
3	F	5A	497.37	497.43	U	N/A	I C 3, II B 1	UPLAND	338		338							0.06		
3	F	5A	497.43	497.55	U	N/A	I A 2	UPLAND	594		594							0.11		

SPREAD	SECTION	ROW MODE	FROM MP	TO MP	NWI CODE	HGM CLASS	VIERECK	DESCRIPTION	LINEAR FEET	WETLAND FEET	UPLAND FEET	DISTURBED FEET	Comments	Mode 1 - Ice Workpad (miles)	Mode 2 - Frost Pack (miles)	Mode 3 - Timber Mats	Mode 4 - Granular Workpad	Mode 5A - Grade	Mode 5B - Mountain Grade	Stream & Flood Plain Crossings
3	F	5A	497.55	497.55	PSS1A	RIVERINE	II B 2	WETLAND	39	39								0.01		
3	F	5A	497.55	497.67	U	N/A	I A 2	UPLAND	641		641							0.12		
3	F	5A	497.67	497.77	U	N/A	I C 2, II B 2	UPLAND	508		508							0.10		
3	F	5A	497.77	497.78	PSS1C	RIVERINE	II B 2, II A 3	WETLAND	43	43								0.01		
3	F	5A	497.78	497.87	U	N/A	I A 2	UPLAND	486		486							0.09		
3	F	5A	497.87	497.87	PSS1C	RIVERINE	II B 2, II A 3	WETLAND	20	20								0.00		
3	F	5A	497.87	497.89	U	N/A	I A 2	UPLAND	65		65							0.01		
3	F	5A	497.89	498.01	U	N/A	I C 2, II B 2	UPLAND	633		633							0.12		
3	F	5A	498.01	498.23	U	N/A	I A 2, I C 2	UPLAND	1167		1167							0.22		
3	F	5A	498.23	498.23	U	N/A	II B 2, I C 2	UPLAND	34		34							0.01		
3	F	5A	498.23	498.27	U	N/A	I A 2, I C 2	UPLAND	171		171							0.03		
3	F	5A	498.27	498.29	U	N/A	II B 2, I C 2	UPLAND	117		117							0.02		
3	F	5A	498.29	498.34	U	N/A	I A 2, I C 2	UPLAND	275		275							0.05		
3	F	5A	498.34	498.50	U	N/A	I C 2	UPLAND	861		861							0.16		
3	F	5A	498.50	498.55	PFO4/SS1B	FLAT - ORGANIC	I A 2, II C 2	WETLAND	269	269								0.05		
3	F	5A	498.55	498.59	PFO4/SS4B	SLOPE	I A 2, II C 2	WETLAND	166	166								0.03		
3	G	5A	498.59	498.62	PFO4/SS4B	SLOPE	I A 2, II C 2	WETLAND	172	172								0.03		
3	G	5A	498.62	498.63	U	N/A	I C 2	UPLAND	50		50							0.01		
3	G	5A	498.63	498.66	U	N/A	II B 1	UPLAND	155		155							0.03		
3	G	5A	498.66	498.66	U	N/A	I C 2	UPLAND	30		30							0.01		
3	G	5A	498.66	498.68	U	N/A	I A 2, I C 2	UPLAND	83		83							0.02		
3	G	5A	498.68	498.70	U	N/A	I C 2	UPLAND	107		107							0.02		
3	G	5A	498.70	498.72	D	N/A	NONE	DISTURBED	124			124						0.02		
3	G	5A	498.72	498.72	PSS1/EM1B	FLAT - ORGANIC	II C 2, III A 2	WETLAND	3	3								0.00		
3	G	5A	498.72	498.73	U	N/A	I C 2	UPLAND	38		38							0.01		
3	G	2	498.73	498.83	U	N/A	I C 2	UPLAND	535		535				0.10					
3	G	2	498.83	498.97	PFO4/SS4B	FLAT - ORGANIC	I A 2, II A 2	WETLAND	751	751					0.14					
3	G	2	498.97	498.98	PSS1/4B	DEPRESSIONAL	II C 1, II A 3	WETLAND	30	30					0.01					
3	G	2	498.98	499.08	PFO4/SS4B	FLAT - ORGANIC	I A 2, II A 2	WETLAND	544	544					0.10					
3	G	5A	499.08	499.10	PFO4/SS4B	FLAT - ORGANIC	I A 2, II A 2	WETLAND	89	89								0.02		
3	G	5A	499.10	499.11	U	N/A	I A 2	UPLAND	66		66							0.01		
3	G	5A	499.11	499.15	PFO4/SS4B	FLAT - ORGANIC	I A 2	WETLAND	205	205								0.04		
3	G	2	499.15	499.49	PFO4/SS4B	FLAT - ORGANIC	I A 2	WETLAND	1814	1814					0.34					
3	G	2	499.49	499.51	PSS1B	DEPRESSIONAL	II B 2, II C 1	WETLAND	73	73					0.01					
3	G	2	499.51	499.94	PFO4/SS4B	FLAT - ORGANIC	I A 2	WETLAND	2302	2302					0.44					
3	G	2	499.94	499.99	U	N/A	I A 2	UPLAND	217		217				0.04					
3	G	2	499.99	500.01	PFO4/SS4B	FLAT - ORGANIC	I A 2	WETLAND	112	112					0.02					
3	G	2	500.01	500.05	PSS4B	FLAT - ORGANIC	I A 2	WETLAND	251	251					0.05					
3	G	2	500.05	500.08	PFO4/SS4B	FLAT - ORGANIC	I A 2	WETLAND	122	122					0.02					
3	G	2	500.08	500.22	U	N/A	I C 2	UPLAND	778		778				0.15					
3	G	2	500.22	500.25	U	N/A	I A 2	UPLAND	130		130				0.02					
3	G	2	500.25	500.38	U	N/A	I C 2	UPLAND	675		675				0.13					
3	G	2	500.38	500.40	U	N/A	I A 2	UPLAND	141		141				0.03					
3	G	2	500.40	500.46	PSS4B	FLAT - ORGANIC	I A 2	WETLAND	277	277					0.05					
3	G	2	500.46	500.47	U	N/A	I A 2	UPLAND	47		47				0.01					
3	G	2	500.47	500.64	U	N/A	I C 2	UPLAND	942		942				0.18					
3	G	2	500.64	500.65	PSS4B	FLAT - ORGANIC	II A 2	WETLAND	27	27					0.01					
3	G	2	500.65	500.69	U	N/A	I C 2	UPLAND	238		238				0.04					
3	G	2	500.69	500.89	PSS4B	FLAT - ORGANIC	II A 2	WETLAND	1033	1033					0.20					
3	G	2	500.89	500.94	U	N/A	I C 2	UPLAND	243		243				0.05					
3	G	2	500.94	500.98	PSS4B	FLAT - ORGANIC	II A 2	WETLAND	254	254					0.05					
3	G	2	500.98	501.01	U	N/A	I C 2	UPLAND	138		138				0.03					
3	G	2	501.01	501.02	U	N/A	I A 2	UPLAND	65		65				0.01					
3	G	2	501.02	501.04	PSS4B	FLAT - ORGANIC	II A 2	WETLAND	74	74					0.01					
3	G	2	501.04	501.05	U	N/A	I A 2	UPLAND	72		72				0.01					
3	G	2	501.05	501.13	U	N/A	I C 2	UPLAND	411		411				0.08					
3	G	2	501.13	501.14	U	N/A	I A 2	UPLAND	53		53				0.01					
3	G	2	501.14	501.15	U	N/A	I C 2	UPLAND	48		48				0.01					
3	G	2	501.15	501.22	PSS4B	FLAT - ORGANIC	II A 2	WETLAND	369	369					0.07					
3	G	2	501.22	501.47	U	N/A	I A 2	UPLAND	1341		1341				0.25					
3	G	2	501.47	501.49	U	N/A	I C 2	UPLAND	82		82				0.02					
3	G	WB-W	501.49	501.49	U	N/A	I C 2	UPLAND	22		22									0.00
3	G	WB-W	501.49	501.49	PSS1A	RIVERINE	II B 2	WETLAND	15	15										0.00
3	G	WB-W	501.49	501.50	U	N/A	I C 1	UPLAND	52		52									0.01
3	G	2	501.50	501.60	U	N/A	I C 1	UPLAND	493		493				0.09					
3	G	2	501.60	501.64	U	N/A	I A 2, I C 2	UPLAND	212		212				0.04					
3	G	2	501.64	501.65	PSS4B	FLAT - ORGANIC	II A 2	WETLAND	88	88					0.02					
3	G	2	501.65	501.67	U	N/A	I A 2, I C 2	UPLAND	96		96				0.02					
3	G	2	501.67	501.72	U	N/A	I C 1	UPLAND	250		250				0.05					
3	G	5A	501.72	501.75	U	N/A	I C 1	UPLAND	150		150							0.03		
3	G	2	501.75	501.76	U	N/A	I C 1	UPLAND	81		81				0.02					
3	G	2	501.76	501.78	PSS1/4B	FLAT - ORGANIC	II A 3, II C 2	WETLAND	72	72					0.01					

SPREAD	SECTION	ROW MODE	FROM MP	TO MP	NWI CODE	HGM CLASS	VIERECK	DESCRIPTION	LINEAR FEET	WETLAND FEET	UPLAND FEET	DISTURBED FEET	Comments	Mode 1 - Ice Workpad (miles)	Mode 2 - Frost Pack (miles)	Mode 3 - Timber Mats	Mode 4 - Granular Workpad	Mode 5A - Grade	Mode 5B - Mountain Grade	Stream & Flood Plain Crossings
3	G	2	501.78	501.86	PSS1/EM1E	FLAT - ORGANIC	II C 2, III A 3	WETLAND	464	464					0.09					
3	G	2	501.86	501.87	PSS1/EM1E	SLOPE	II C 2, III A 3	WETLAND	50	50					0.01					
3	G	2	501.87	502.11	PSS1/EM1E	FLAT - ORGANIC	II C 2, III A 3	WETLAND	1238	1238					0.23					
3	G	2	502.11	502.11	PSS1/EM1E	RIVERINE	II C 2, III A 2	WETLAND	16	16					0.00					
3	G	WB-W	502.11	502.12	PSS1/EM1E	RIVERINE	II C 2, III A 2	WETLAND	56	56										0.01
3	G	WB-W	502.12	502.12	PSS1B	FLAT - ORGANIC	II C 2	WETLAND	4	4										0.00
3	G	2	502.12	502.18	PSS1B	FLAT - ORGANIC	II C 2	WETLAND	307	307					0.06					
3	G	2	502.18	502.20	PSS1/4B	FLAT - ORGANIC	II A 3, II C 2	WETLAND	81	81					0.02					
3	G	2	502.20	502.38	PSS1B	FLAT - ORGANIC	II C 2	WETLAND	951	951					0.18					
3	G	2	502.38	502.40	PSS1/4B	FLAT - ORGANIC	II A 3, II C 2	WETLAND	109	109					0.02					
3	G	2	502.40	502.41	PSS1B	FLAT - ORGANIC	II C 2	WETLAND	54	54					0.01					
3	G	2	502.41	502.43	PSS1/4B	FLAT - ORGANIC	II A 3, II C 2	WETLAND	122	122					0.02					
3	G	2	502.43	502.48	PSS1B	FLAT - ORGANIC	II C 2	WETLAND	262	262					0.05					
3	G	2	502.48	502.50	PSS1/4B	FLAT - ORGANIC	II A 3, II C 2	WETLAND	126	126					0.02					
3	G	2	502.50	502.52	PSS1B	FLAT - ORGANIC	II C 2	WETLAND	88	88					0.02					
3	G	2	502.52	502.56	PSS1/EM1C	DEPRESSIONAL	II C 2	WETLAND	186	186					0.04					
3	G	2	502.56	502.61	PSS1B	FLAT - ORGANIC	II C 2	WETLAND	289	289					0.05					
3	G	2	502.61	502.65	PSS1/4B	FLAT - ORGANIC	II A 3, II C 2	WETLAND	214	214					0.04					
3	G	2	502.65	502.69	PSS1/EM1C	DEPRESSIONAL	II C 2	WETLAND	213	213					0.04					
3	G	2	502.69	502.79	PSS1/4B	FLAT - ORGANIC	II A 3, II C 2	WETLAND	501	501					0.09					
3	G	2	502.79	502.89	PSS4/FO4B	FLAT - ORGANIC	I A 2, II C 2	WETLAND	571	571					0.11					
3	G	2	502.89	502.95	U	N/A	I C 2, II B 2	UPLAND	292		292				0.06					
3	G	2	502.95	502.96	PSS1/4B	SLOPE	II A 3, II C 2	WETLAND	74	74					0.01					
3	G	2	502.96	502.96	PSS1/EM1B	SLOPE	II C 2, III A 2	WETLAND	6	6					0.00					
3	G	2	502.96	502.99	PSS1/4B	SLOPE	II A 3, II C 2	WETLAND	140	140					0.03					
3	G	2	502.99	503.03	PSS1/EM1B	SLOPE	II C 2, III A 2	WETLAND	221	221					0.04					
3	G	2	503.03	503.13	PSS1/EM1E	SLOPE	II C 2, III A 2	WETLAND	492	492					0.09					
3	G	2	503.13	503.21	PSS1B	FLAT - ORGANIC	II C 2	WETLAND	422	422					0.08					
3	G	2	503.21	503.24	PSS1/EM1E	SLOPE	II C 2, III A 2	WETLAND	166	166					0.03					
3	G	2	503.24	503.33	PSS1B	FLAT - ORGANIC	II C 2	WETLAND	513	513					0.10					
3	G	2	503.33	503.35	PSS1/EM1E	SLOPE	II C 2, III A 2	WETLAND	106	106					0.02					
3	G	2	503.35	503.57	PSS1B	FLAT - ORGANIC	II C 2	WETLAND	1125	1125					0.21					
3	G	2	503.57	503.57	PSS4/FO4B	FLAT - ORGANIC	I A 2, II C 2	WETLAND	19	19					0.00					
3	G	5A	503.57	503.59	PSS4/FO4B	FLAT - ORGANIC	I A 2, II C 2	WETLAND	120	120								0.02		
3	G	2	503.59	503.71	PSS4/FO4B	FLAT - ORGANIC	I A 2, II C 2	WETLAND	634	634					0.12					
3	G	2	503.71	503.76	U	N/A	I C 2, II B 2	UPLAND	266		266				0.05					
3	G	5A	503.76	503.78	U	N/A	I C 2, II B 2	UPLAND	62		62							0.01		
3	G	5A	503.78	503.79	PSS4/FO4B	FLAT - ORGANIC	I A 2, II C 2	WETLAND	82	82								0.02		
3	G	5A	503.79	503.80	PSS1B	FLAT - ORGANIC	II C 2	WETLAND	36	36								0.01		
3	G	2	503.80	503.85	PSS1B	FLAT - ORGANIC	II C 2	WETLAND	247	247					0.05					
3	G	2	503.85	503.88	PSS1/EM1E	FLAT - ORGANIC	II C 2, III A 2	WETLAND	208	208					0.04					
3	G	2	503.88	504.20	PSS1B	FLAT - ORGANIC	II C 2	WETLAND	1690	1690					0.32					
3	G	2	504.20	504.53	PSS4/FO4B	FLAT - ORGANIC	I A 2, II C 2	WETLAND	1743	1743					0.33					
3	G	5A	504.53	504.59	PSS4/FO4B	FLAT - ORGANIC	I A 2, II C 2	WETLAND	291	291								0.06		
3	G	5A	504.59	504.63	U	N/A	I C 1	UPLAND	209		209							0.04		
3	G	5A	504.63	504.64	U	N/A	I A 2, I C 2	UPLAND	78		78							0.01		
3	G	5A	504.64	504.65	PSS1A	RIVERINE	II B 2	WETLAND	4	4								0.00		
3	G	WB-W	504.65	504.65	PSS1A	RIVERINE	II B 2	WETLAND	4	4										0.00
3	G	WB-W	504.65	504.65	R3UBH	RIVERINE	NONE	WETLAND	28	28										0.01
3	G	WB-W	504.65	504.66	U	N/A	I A 2	UPLAND	58		58									0.01
3	G	5A	504.66	504.70	U	N/A	I A 2	UPLAND	182		182							0.03		
3	G	5A	504.70	504.70	PSS1/FO4B	SLOPE	I A 3, II C 2	WETLAND	20	20								0.00		
3	G	5A	504.70	504.73	U	N/A	I A 2	UPLAND	153		153							0.03		
3	G	5A	504.73	504.81	PFO4/SS4B	FLAT - ORGANIC	I A 2, II C 2	WETLAND	402	402								0.08		
3	G	5A	504.81	504.81	D	N/A	NONE	DISTURBED	20			20						0.00		
3	G	5A	504.81	504.85	PFO4/SS4B	FLAT - ORGANIC	I A 2, II C 2	WETLAND	226	226								0.04		
3	G	5A	504.85	504.86	U	N/A	I C 2, II B 2	UPLAND	17		17							0.00		
3	G	WB-W	504.86	504.86	U	N/A	I C 2, II B 2	UPLAND	26		26									0.00
3	G	WB-W	504.86	504.86	R3UBH	RIVERINE	NONE	WETLAND	9	9										0.00
3	G	WB-W	504.86	504.87	U	N/A	I C 2, II B 2	UPLAND	54		54									0.01
3	G	5A	504.87	504.89	U	N/A	I C 2, II B 2	UPLAND	74		74							0.01		
3	G	5A	504.89	505.00	PSS1/4B	FLAT - ORGANIC	I A 3, II C 2	WETLAND	580	580								0.11		
3	G	5A	505.00	505.01	PSS1/EM1Cb	SLOPE	II C 1, III A 2	WETLAND	67	67								0.01		
3	G	2	505.01	505.05	PSS1/EM1Cb	SLOPE	II C 1, III A 2	WETLAND	213	213					0.04					
3	G	2	505.05	505.08	PSS1/4B	FLAT - ORGANIC	I A 3, II C 2	WETLAND	179	179					0.03					
3	G	2	505.08	505.12	PSS1B	FLAT - ORGANIC	II C 2, II A 3	WETLAND	215	215					0.04					
3	G	2	505.12	505.16	PSS1/4B	FLAT - ORGANIC	I A 3, II C 2	WETLAND	194	194					0.04					
3	G	2	505.16	505.16	PSS1B	SLOPE	II C 2	WETLAND	14	14					0.00					
3	G	2	505.16	505.22	PSS1/4B	FLAT - ORGANIC	I A 3, II C 2	WETLAND	295	295					0.06					
3	G	2	505.22	505.33	PSS1/EM1Cb	SLOPE	II C 1, III A 2	WETLAND	608	608					0.12					
3	G	2	505.33	505.49	PSS1/4B	FLAT - ORGANIC	I A 3, II C 2	WETLAND	812	812					0.15					
3	G	2	505.49	505.55	PSS1/EM1C	DEPRESSIONAL	II C 2, III A 2	WETLAND	353	353					0.07					

SPREAD	SECTION	ROW MODE	FROM MP	TO MP	NWI CODE	HGM CLASS	VIERECK	DESCRIPTION	LINEAR FEET	WETLAND FEET	UPLAND FEET	DISTURBED FEET	Comments	Mode 1 - Ice Workpad (miles)	Mode 2 - Frost Pack (miles)	Mode 3 - Timber Mats	Mode 4 - Granular Workpad	Mode 5A - Grade	Mode 5B - Mountain Grade	Stream & Flood Plain Crossings
3	G	2	505.55	505.59	PSS1/4B	FLAT - ORGANIC	I A 3, II C 2	WETLAND	201	201					0.04					
3	G	2	505.59	505.65	PSS1/EM1C	DEPRESSIONAL	II C 2, III A 2	WETLAND	311	311					0.06					
3	G	2	505.65	505.71	PSS1/4B	FLAT - ORGANIC	I A 3, II C 2	WETLAND	286	286					0.05					
3	G	2	505.71	505.73	PSS1/EM1C	DEPRESSIONAL	II C 2, III A 2	WETLAND	105	105					0.02					
3	G	2	505.73	505.84	PSS1/4B	FLAT - ORGANIC	I A 3, II C 2	WETLAND	623	623					0.12					
3	G	5A	505.84	505.92	PSS1/4B	FLAT - ORGANIC	I A 3, II C 2	WETLAND	420	420								0.08		
3	G	2	505.92	505.92	PSS1/4B	FLAT - ORGANIC	I A 3, II C 2	WETLAND	4	4					0.00					
3	G	2	505.92	505.95	PSS1/EM1C	DEPRESSIONAL	II C 2, III A 2	WETLAND	126	126					0.02					
3	G	2	505.95	506.20	PSS1/4B	FLAT - ORGANIC	I A 3, II C 2	WETLAND	1348	1348					0.26					
3	G	2	506.20	506.26	PSS1/EM1C	DEPRESSIONAL	II C 2, III A 2	WETLAND	317	317					0.06					
3	G	2	506.26	506.31	PSS1/4B	FLAT - ORGANIC	I A 3, II C 2	WETLAND	230	230					0.04					
3	G	2	506.31	506.34	PSS1/EM1C	DEPRESSIONAL	II C 2, III A 2	WETLAND	149	149					0.03					
3	G	2	506.34	506.35	PSS1/4B	FLAT - ORGANIC	I A 3, II C 2	WETLAND	99	99					0.02					
3	G	2	506.35	506.37	PSS1/EM1C	DEPRESSIONAL	II C 2, III A 2	WETLAND	99	99					0.02					
3	G	2	506.37	506.52	PSS1/4B	FLAT - ORGANIC	I A 3, II C 2	WETLAND	797	797					0.15					
3	G	2	506.52	506.55	PFO4/SS1B	FLAT - ORGANIC	I A 2, II C 2	WETLAND	148	148					0.03					
3	G	2	506.55	506.56	PSS1/EM1C	SLOPE	I A 3, II C 2	WETLAND	47	47					0.01					
3	G	2	506.56	506.65	PFO4/SS1B	FLAT - ORGANIC	I A 2, II C 2	WETLAND	486	486					0.09					
3	G	2	506.65	506.66	PSS1/4B	RIVERINE	I A 3, II C 2	WETLAND	55	55					0.01					
3	G	2	506.66	506.67	PSS1/EM1Cb	RIVERINE	II C 2, III A 3	WETLAND	57	57					0.01					
3	G	2	506.67	506.68	R3UBHb	RIVERINE	NONE	WETLAND	26	26					0.00					
3	G	2	506.68	506.69	PSS1/EM1Cb	RIVERINE	II C 2, III A 3	WETLAND	64	64					0.01					
3	G	2	506.69	506.69	R3UBHb	RIVERINE	NONE	WETLAND	8	8					0.00					
3	G	2	506.69	506.71	PSS1/EM1Cb	RIVERINE	II C 2, III A 3	WETLAND	90	90					0.02					
3	G	2	506.71	506.71	R3UBHb	RIVERINE	NONE	WETLAND	7	7					0.00					
3	G	2	506.71	506.72	PSS1/EM1Cb	RIVERINE	II C 2, III A 3	WETLAND	66	66					0.01					
3	G	2	506.72	506.84	PSS1/EM1C	SLOPE	I A 3, II C 2	WETLAND	639	639					0.12					
3	G	2	506.84	507.00	PSS1/4B	FLAT - ORGANIC	II A 3, II C 2	WETLAND	809	809					0.15					
3	G	5A	507.00	507.00	PSS1/4B	FLAT - ORGANIC	II A 3, II C 2	WETLAND	9	9								0.00		
3	G	5A	507.00	507.01	PSS4/1B	FLAT - ORGANIC	I A 2, II C 2	WETLAND	62	62								0.01		
3	G	5A	507.01	507.04	U	N/A	I A 2	UPLAND	148		148							0.03		
3	G	5A	507.04	507.04	PFO4B	FLAT - ORGANIC	I A 2	WETLAND	21	21								0.00		
3	G	2	507.04	507.17	PFO4B	FLAT - ORGANIC	I A 2	WETLAND	687	687					0.13					
3	G	2	507.17	507.20	U	N/A	I A 2	UPLAND	133		133				0.03					
3	G	2	507.20	507.22	PFO4B	FLAT - ORGANIC	I A 2	WETLAND	121	121					0.02					
3	G	2	507.22	507.31	PSS1/4B	FLAT - ORGANIC	II C 2, II A 2	WETLAND	450	450					0.09					
3	G	2	507.31	507.34	PSS4/1B	FLAT - ORGANIC	I A 2, II C 2	WETLAND	167	167					0.03					
3	G	2	507.34	507.35	PSS1/4B	FLAT - ORGANIC	II C 2, II A 2	WETLAND	39	39					0.01					
3	G	2	507.35	507.35	PSS4/1B	FLAT - ORGANIC	I A 2, II C 2	WETLAND	19	19					0.00					
3	G	2	507.35	507.51	PSS1/4B	FLAT - ORGANIC	II C 2, II A 2	WETLAND	850	850					0.16					
3	G	2	507.51	507.52	PSS1/EM1E	SLOPE	II C 2, III A 3	WETLAND	68	68					0.01					
3	G	2	507.52	507.55	PSS1/4B	FLAT - ORGANIC	II C 2, I A 3	WETLAND	146	146					0.03					
3	G	2	507.55	507.62	PSS1B	FLAT - ORGANIC	II C 2	WETLAND	351	351					0.07					
3	G	2	507.62	507.66	PSS1/4B	FLAT - ORGANIC	II C 2, I A 3	WETLAND	219	219					0.04					
3	G	2	507.66	507.68	PSS4/1B	FLAT - ORGANIC	I A 2, II C 2	WETLAND	140	140					0.03					
3	G	2	507.68	507.76	PSS1/4B	FLAT - ORGANIC	II C 2, I A 3	WETLAND	389	389					0.07					
3	G	WB-W	507.76	507.78	PSS1/4B	FLAT - ORGANIC	II C 2, I A 3	WETLAND	90	90										0.02
3	G	2	507.78	507.78	PSS1/4B	FLAT - ORGANIC	II C 2, I A 3	WETLAND	22	22					0.00					
3	G	2	507.78	507.79	U	N/A	I A2	UPLAND	45		45				0.01					
3	G	2	507.79	507.79	R3UBHb	RIVERINE	NONE	WETLAND	5	5					0.00					
3	G	2	507.79	507.79	U	N/A	I A 2	UPLAND	3		3				0.00					
3	G	2	507.79	507.80	PSS1/4B	FLAT - ORGANIC	II C 2, I A 3	WETLAND	67	67					0.01					
3	G	2	507.80	507.91	PSS1B	FLAT - ORGANIC	II C 2	WETLAND	550	550					0.10					
3	G	2	507.91	507.93	PSS1/4B	FLAT - ORGANIC	II C 2, I A 3	WETLAND	138	138					0.03					
3	G	2	507.93	507.96	PSS1/EM1Cb	RIVERINE	II C 2, III A 2	WETLAND	123	123					0.02					
3	G	2	507.96	508.06	PSS1/EM1B	FLAT - ORGANIC	II C 2, III A 2	WETLAND	568	568					0.11					
3	G	2	508.06	508.09	PSS1/4B	FLAT - ORGANIC	II C 2, I A 3	WETLAND	125	125					0.02					
3	G	2	508.09	508.34	PSS1/EM1B	FLAT - ORGANIC	II C 2, III A 2	WETLAND	1329	1329					0.25					
3	G	2	508.34	508.39	PFO4/SS4B	FLAT - ORGANIC	I A 2, II C 2	WETLAND	289	289					0.05					
3	G	2	508.39	508.43	PSS1/EM1B	FLAT - ORGANIC	II C 2, III A 2	WETLAND	170	170					0.03					
3	G	2	508.43	508.46	PFO4/SS4B	FLAT - ORGANIC	I A 2, II C 2	WETLAND	193	193					0.04					
3	G	2	508.46	508.48	PSS1/EM1B	FLAT - ORGANIC	II C 2, III A 2	WETLAND	70	70					0.01					
3	G	2	508.48	508.49	PEM1/SS1E	SLOPE	II C 2, III A 3	WETLAND	63	63					0.01					
3	G	2	508.49	508.90	PSS1/EM1B	FLAT - ORGANIC	II C 2, III A 2	WETLAND	2197	2197					0.42					
3	G	2	508.90	508.97	PSS1/4B	FLAT - ORGANIC	I A 3, II C 2	WETLAND	354	354					0.07					
3	G	2	508.97	509.24	PSS1/EM1B	FLAT - ORGANIC	II C 2, III A 2	WETLAND	1400	1400					0.27					
3	G	5A	509.24	509.26	PSS1/EM1B	FLAT - ORGANIC	II C 2, III A 2	WETLAND	105	105								0.02		
3	G	5A	509.26	509.27	PSS1/4B	FLAT - ORGANIC	I A 3, II C 2	WETLAND	55	55								0.01		
3	G	5A	509.27	509.29	U	N/A	I A 2, I C 2	UPLAND	114		114							0.02		
3	G	5A	509.29	509.31	PFO4B	FLAT - ORGANIC	I A 2, II C 2	WETLAND	135	135								0.03		
3	G	5A	509.31	509.35	U	N/A	I A 2, I C 2	UPLAND	217		217							0.04		
3	G	5A	509.35	509.38	PFO4/SS4B	FLAT - ORGANIC	I A 2, II C 2	WETLAND	110	110								0.02		

SPREAD	SECTION	ROW MODE	FROM MP	TO MP	NWI CODE	HGM CLASS	VIERECK	DESCRIPTION	LINEAR FEET	WETLAND FEET	UPLAND FEET	DISTURBED FEET	Comments	Mode 1 - Ice Workpad (miles)	Mode 2 - Frost Pack (miles)	Mode 3 - Timber Mats	Mode 4 - Granular Workpad	Mode 5A - Grade	Mode 5B - Mountain Grade	Stream & Flood Plain Crossings
3	G	2	509.38	509.86	PFO4/SS4B	FLAT - ORGANIC	I A 2, II C 2	WETLAND	2576	2576					0.49					
3	G	2	509.86	509.92	PSS4/1B	FLAT - ORGANIC	II A 3, II C 2	WETLAND	282	282					0.05					
3	G	2	509.92	510.01	PSS1/4E	DEPRESSIONAL	II C 2, II A 3	WETLAND	495	495					0.09					
3	G	2	510.01	510.04	PSS4/1B	FLAT - ORGANIC	II A 3, II C 2	WETLAND	156	156					0.03					
3	G	2	510.04	510.31	PSS1/4B	FLAT - ORGANIC	II A 3, II C 2	WETLAND	1408	1408					0.27					
3	G	2	510.31	510.36	PFO4/SS4B	FLAT - ORGANIC	I A 2, II C 2	WETLAND	279	279					0.05					
3	G	2	510.36	510.37	PSS1/4B	FLAT - ORGANIC	II B 2, I A 3	WETLAND	76	76					0.01					
3	G	2	510.37	510.44	PFO4/SS4B	FLAT - ORGANIC	I A 2, II C 2	WETLAND	340	340					0.06					
3	G	2	510.44	510.51	PSS1/4B	FLAT - ORGANIC	II B 2, I A 3	WETLAND	403	403					0.08					
3	G	2	510.51	510.96	PFO4/SS4B	FLAT - ORGANIC	I A 2, II C 2	WETLAND	2367	2367					0.45					
3	G	2	510.96	510.98	PSS1/4B	FLAT - ORGANIC	II C 2, I A 3	WETLAND	99	99					0.02					
3	G	2	510.98	511.01	PFO4/SS4B	FLAT - ORGANIC	I A 2, II C 2	WETLAND	167	167					0.03					
3	G	2	511.01	511.11	PSS1/4B	FLAT - ORGANIC	II C 2, I A 3	WETLAND	502	502					0.10					
3	G	2	511.11	511.21	U	N/A	I A 2, I C 2	UPLAND	554		554				0.11					
3	G	5A	511.21	511.27	U	N/A	I A 2, I C 2	UPLAND	289		289							0.05		
3	G	5A	511.27	511.27	PSS1B	SLOPE	II B 2, II C 2	WETLAND	3	3								0.00		
3	G	5A	511.27	511.30	U	N/A	I A 2, I C 2	UPLAND	180		180							0.03		
3	G	5A	511.30	511.48	PSS4/1B	FLAT - ORGANIC	I A 2, II C 2	WETLAND	924	924								0.17		
3	G	5A	511.48	511.50	PSS1/4B	SLOPE	II B 2, I A 3	WETLAND	134	134								0.03		
3	G	2	511.50	511.56	PSS1/4B	SLOPE	II B 2, I A 3	WETLAND	296	296					0.06					
3	G	2	511.56	511.67	PSS1/4B	FLAT - ORGANIC	I A 3, II C 2	WETLAND	607	607					0.12					
3	G	2	511.67	511.70	PSS4/1B	FLAT - ORGANIC	I A 2, II C 2	WETLAND	117	117					0.02					
3	G	5A	511.70	511.78	PSS4/1B	FLAT - ORGANIC	I A 2, II C 2	WETLAND	466	466								0.09		
3	G	5A	511.78	511.79	U	N/A	I A 2, I C 2	UPLAND	12		12							0.00		
3	G	5A	511.79	511.96	PSS4/1B	FLAT - ORGANIC	I A 2, II C 2	WETLAND	891	891								0.17		
3	G	5A	511.96	512.00	U	N/A	I A 2, I C 2	UPLAND	259		259							0.05		
3	G	5A	512.00	512.05	PSS4/1B	FLAT - ORGANIC	I A 2, II C 2	WETLAND	241	241								0.05		
3	G	5A	512.05	512.10	U	N/A	I A 2, I C 2	UPLAND	241		241							0.05		
3	G	5A	512.10	512.11	PFO4/SS1B	SLOPE	I A 2, II C 2	WETLAND	96	96								0.02		
3	G	5A	512.11	512.15	U	N/A	I A 2, I C 2	UPLAND	170		170							0.03		
3	G	5A	512.15	512.15	PFO4/SS1B	SLOPE	I A 2, II C 2	WETLAND	37	37								0.01		
3	G	5A	512.15	512.17	U	N/A	I A 2, I C 2	UPLAND	76		76							0.01		
3	G	5A	512.17	512.17	PFO4/SS1B	SLOPE	I A 2, II C 2	WETLAND	22	22								0.00		
3	G	5A	512.17	512.19	U	N/A	I A 2, I C 2	UPLAND	115		115							0.02		
3	G	5A	512.19	512.25	U	N/A	I A 2, II C 2	UPLAND	304		304							0.06		
3	G	5A	512.25	512.25	PFO4/SS1B	SLOPE	I A 2, II C 2	WETLAND	18	18								0.00		
3	G	5A	512.25	512.29	U	N/A	I A 2, II C 2	UPLAND	213		213							0.04		
3	G	5A	512.29	512.62	U	N/A	I A 2, I C 2	UPLAND	1721		1721							0.33		
3	G	5A	512.62	512.65	U	N/A	I A 3, II B 2	UPLAND	152		152							0.03		
3	G	5A	512.65	512.73	U	N/A	I C 2	UPLAND	426		426							0.08		
3	G	WB-W	512.73	512.73	U	N/A	I C 2	UPLAND	7		7									0.00
3	G	WB-W	512.73	512.74	R4SBC	RIVERINE	NONE	WETLAND	53	53										0.01
3	G	5A	512.74	512.75	R4SBC	RIVERINE	NONE	WETLAND	26	26								0.01		
3	G	5A	512.75	512.77	U	N/A	I C 2	UPLAND	105		105							0.02		
3	G	2	512.77	512.86	U	N/A	I C 2	UPLAND	481		481				0.09					
3	G	2	512.86	512.94	PSS1/EM1B	SLOPE	II C 2, III A 2	WETLAND	449	449					0.08					
3	G	2	512.94	513.00	U	N/A	I C 2, II B 2	UPLAND	307		307				0.06					
3	G	2	513.00	513.00	U	N/A	II C 2, III A 1	UPLAND	18		18				0.00					
3	G	2	513.00	513.01	D	N/A	NONE	DISTURBED	30			30			0.01					
3	G	2	513.01	513.01	U	N/A	I B 2, II B 2	UPLAND	22		22				0.00					
3	G	2	513.01	513.09	PEM1/SS1E	SLOPE	II C 2, III A 2	WETLAND	380	380					0.07					
3	G	2	513.09	513.09	PSS1/EM1B	SLOPE	II C 2, III A 2	WETLAND	18	18					0.00					
3	G	2	513.09	513.12	PSS1/4B	FLAT - ORGANIC	I A 3, II C 2	WETLAND	159	159					0.03					
3	G	2	513.12	513.13	PSS1/EM1B	SLOPE	II C 2, III A 2	WETLAND	38	38					0.01					
3	G	2	513.13	513.14	PSS1/4B	SLOPE	I A 3, II C 2	WETLAND	82	82					0.02					
3	G	2	513.14	513.16	U	N/A	I A 3, II B 2	UPLAND	108		108				0.02					
3	G	2	513.16	513.18	PEM1/SS1E	SLOPE	II C 2, III A 2	WETLAND	68	68					0.01					
3	G	2	513.18	513.20	U	N/A	I A 3, II B 2	UPLAND	148		148				0.03					
3	G	2	513.20	513.24	PSS4/1B	FLAT - ORGANIC	I A 2, II C 2	WETLAND	220	220					0.04					
3	G	2	513.24	513.26	PSS1B	FLAT - ORGANIC	II C 2	WETLAND	57	57					0.01					
3	G	2	513.26	513.26	PSS4/1B	FLAT - ORGANIC	I A 2, II C 2	WETLAND	15	15					0.00					
3	G	5A	513.26	513.27	PSS4/1B	FLAT - ORGANIC	I A 2, II C 2	WETLAND	55	55								0.01		
3	G	5A	513.27	513.29	U	N/A	I A 2, II B 2	UPLAND	95		95							0.02		
3	G	2	513.29	513.37	U	N/A	I A 2, II B 2	UPLAND	463		463				0.09					
3	G	2	513.37	513.38	PSS1/EM1E	SLOPE	II C 2, III A 3	WETLAND	19	19					0.00					
3	G	2	513.38	513.39	PSS1/EM1E	DEPRESSIONAL	II C 2, III A 2	WETLAND	81	81					0.02					
3	G	2	513.39	513.41	PSS1/EM1E	SLOPE	II C 2, III A 3	WETLAND	64	64					0.01					
3	G	2	513.41	513.41	PSS4/FO4B	SLOPE	I A 2, II C 2	WETLAND	3	3					0.00					
3	G	5A	513.41	513.41	PSS4/FO4B	SLOPE	I A 2, II C 2	WETLAND	23	23								0.00		
3	G	5A	513.41	513.42	U	N/A	I A 2	UPLAND	77		77							0.01		
3	G	5A	513.42	513.48	PFO4B	SLOPE	I A 2, II C 2	WETLAND	312	312								0.06		
3	G	5A	513.48	513.54	U	N/A	I A 2	UPLAND	309		309							0.06		

SPREAD	SECTION	ROW MODE	FROM MP	TO MP	NWI CODE	HGM CLASS	VIERECK	DESCRIPTION	LINEAR FEET	WETLAND FEET	UPLAND FEET	DISTURBED FEET	Comments	Mode 1 - Ice Workpad (miles)	Mode 2 - Frost Pack (miles)	Mode 3 - Timber Mats	Mode 4 - Granular Workpad	Mode 5A - Grade	Mode 5B - Mountain Grade	Stream & Flood Plain Crossings
3	G	2	513.54	513.59	U	N/A	I A 2	UPLAND	231		231				0.04					
3	G	2	513.59	513.75	PSS1/EM1E	SLOPE	II C 1, III A 2	WETLAND	865	865					0.16					
3	G	2	513.75	513.76	PSS4/FO4B	FLAT - ORGANIC	I A 2, II C 2	WETLAND	56	56					0.01					
3	G	2	513.76	513.79	PSS1/EM1E	SLOPE	II C 1, III A 2	WETLAND	146	146					0.03					
3	G	2	513.79	513.80	PEM1F	DEPRESSIONAL	III A 3	WETLAND	51	51					0.01					
3	G	2	513.80	513.82	PSS1/EM1E	SLOPE	II C 1, III A 2	WETLAND	118	118					0.02					
3	G	2	513.82	513.83	PEM1F	DEPRESSIONAL	III A 3	WETLAND	65	65					0.01					
3	G	2	513.83	513.94	PSS1/EM1E	SLOPE	II C 1, III A 2	WETLAND	572	572					0.11					
3	G	2	513.94	514.11	PSS1/EM1C	FLAT - ORGANIC	II C 1, III A 2	WETLAND	868	868					0.16					
3	G	2	514.11	514.18	PSS1/EM1B	FLAT - ORGANIC	II C 1, III A 2	WETLAND	416	416					0.08					
3	G	2	514.18	514.27	PSS1/EM1C	FLAT - ORGANIC	II C 1, III A 2	WETLAND	462	462					0.09					
3	G	2	514.27	514.42	PSS1/EM1B	FLAT - ORGANIC	II C 1, III A 2	WETLAND	807	807					0.15					
3	G	2	514.42	514.45	PSS1/4B	FLAT - ORGANIC	II C 1, I A 3	WETLAND	110	110					0.02					
3	G	2	514.45	514.49	PSS1/EM1B	SLOPE	II C 1, III A 2	WETLAND	218	218					0.04					
3	G	2	514.49	514.52	PSS1/4B	FLAT - ORGANIC	II C 1, I A 3	WETLAND	180	180					0.03					
3	G	2	514.52	514.54	PSS1/EM1B	SLOPE	II C 1, III A 2	WETLAND	107	107					0.02					
3	G	2	514.54	514.54	PSS1/4B	FLAT - ORGANIC	II C 1, I A 3	WETLAND	9	9					0.00					
3	G	2	514.54	514.56	PSS1/EM1B	SLOPE	II C 1, III A 2	WETLAND	109	109					0.02					
3	G	2	514.56	514.57	PSS1/EM1B	FLAT - ORGANIC	II C 1, III A 2	WETLAND	12	12					0.00					
3	G	2	514.57	514.66	PSS1/4B	FLAT - ORGANIC	II C 1, II A 2	WETLAND	498	498					0.09					
3	G	2	514.66	514.68	PSS1/EM1B	SLOPE	II C 1, III A 2	WETLAND	85	85					0.02					
3	G	2	514.68	514.68	D	N/A	NONE	DISTURBED	45			45			0.01					
3	G	2	514.68	514.71	PSS1/EM1C	DEPRESSIONAL	II C 2, III A 2	WETLAND	111	111					0.02					
3	G	2	514.71	514.83	PSS1/EM1B	FLAT - ORGANIC	II C 1, III A 2	WETLAND	639	639					0.12					
3	G	2	514.83	514.87	PSS1/EM1C	FLAT - ORGANIC	II C 2, III A 2	WETLAND	208	208					0.04					
3	G	2	514.87	515.09	PSS1/EM1B	FLAT - ORGANIC	II C 1, III A 2	WETLAND	1209	1209					0.23					
3	G	2	515.09	515.11	PSS4/FO4B	FLAT - ORGANIC	I A 2, II C 2	WETLAND	61	61					0.01					
3	G	2	515.11	515.17	PSS1/4B	FLAT - ORGANIC	I A 3, II C 1	WETLAND	351	351					0.07					
3	G	2	515.17	515.18	PSS1/EM1B	FLAT - ORGANIC	II C 1, III A 2	WETLAND	26	26					0.00					
3	G	2	515.18	515.22	PSS1/EM1C	SLOPE	II C 1, III A 2	WETLAND	228	228					0.04					
3	G	2	515.22	515.24	PSS4/1B	SLOPE	I A 2, II C 1	WETLAND	114	114					0.02					
3	G	2	515.24	515.27	U	N/A	I C 2, II C 2	UPLAND	152		152				0.03					
3	G	2	515.27	515.27	PSS1/EM1B	SLOPE	II C 2, III A 2	WETLAND	10	10					0.00					
3	G	2	515.27	515.28	U	N/A	I C 2, II C 2	UPLAND	25		25				0.00					
3	G	2	515.28	515.31	PSS1/EM1B	SLOPE	II C 2, III A 2	WETLAND	159	159					0.03					
3	G	2	515.31	515.44	U	N/A	I C 2, II C 2	UPLAND	682		682				0.13					
3	G	2	515.44	515.48	PFO4/SS1B	FLAT - ORGANIC	I A 2, II C 2	WETLAND	203	203					0.04					
3	G	2	515.48	515.49	PSS4/1B	FLAT - ORGANIC	I A 2, II C 1	WETLAND	81	81					0.02					
3	G	2	515.49	515.51	PFO4/SS1B	FLAT - ORGANIC	I A 2, II C 2	WETLAND	97	97					0.02					
3	G	2	515.51	515.54	PSS4/1B	FLAT - ORGANIC	I A 2, II C 1	WETLAND	179	179					0.03					
3	G	2	515.54	515.57	PSS1/4B	FLAT - ORGANIC	II A 3, II C 1	WETLAND	138	138					0.03					
3	G	2	515.57	515.67	PFO4/SS4B	FLAT - ORGANIC	I A 2, II C 2	WETLAND	516	516					0.10					
3	G	5A	515.67	515.67	PFO4/SS4B	FLAT - ORGANIC	I A 2, II C 2	WETLAND	23	23								0.00		
3	G	5A	515.67	515.75	U	N/A	I C 2, II B 2	UPLAND	397		397							0.08		
3	G	WB-W	515.75	515.76	U	N/A	I C 2, II B 2	UPLAND	60		60									0.01
3	G	5A	515.76	515.87	U	N/A	I C 2, II B 2	UPLAND	578		578							0.11		
3	G	5A	515.87	515.91	PFO4/SS4B	FLAT - ORGANIC	I A 2, II C 2	WETLAND	235	235								0.04		
3	G	5A	515.91	515.95	PSS1B	FLAT - ORGANIC	II C 2	WETLAND	193	193								0.04		
3	G	5A	515.95	516.03	PFO4/SS4B	FLAT - ORGANIC	I A 2, II C 2	WETLAND	427	427								0.08		
3	G	5A	516.03	516.07	PFO4/SS4B	FLAT - ORGANIC	I A 2, II C 2	WETLAND	231	231								0.04		
3	G	5A	516.07	516.09	U	N/A	I A 2	UPLAND	104		104							0.02		
3	G	5A	516.09	516.28	PFO4/SS4B	FLAT - ORGANIC	I A 2, II C 2	WETLAND	1000	1000								0.19		
3	G	5A	516.28	516.28	PSS1B	FLAT - ORGANIC	II C 2, II A 3	WETLAND	9	9								0.00		
3	G	5A	516.28	516.35	U	N/A	I C 2, II B 2	UPLAND	327		327							0.06		
3	G	5A	516.35	516.37	PSS4/1B	FLAT - ORGANIC	I A 2, II C 2	WETLAND	131	131								0.02		
3	G	5A	516.37	516.41	U	N/A	I C 2, II B 2	UPLAND	213		213							0.04		
3	G	5A	516.41	516.48	PFO4/SS4B	FLAT - ORGANIC	I A 2, II C 2	WETLAND	362	362								0.07		
3	G	5A	516.48	516.48	U	N/A	I C 2, II B 2	UPLAND	19		19							0.00		
3	G	2	516.48	516.51	U	N/A	I C 2, II B 2	UPLAND	122		122				0.02					
3	G	2	516.51	516.54	PSS4/1B	FLAT - ORGANIC	II A 2, II C 2	WETLAND	166	166					0.03					
3	G	2	516.54	516.57	PSS1B	FLAT - ORGANIC	II C 2	WETLAND	190	190					0.04					
3	G	2	516.57	516.58	PSS4/1B	FLAT - ORGANIC	II A 2, II C 2	WETLAND	40	40					0.01					
3	G	2	516.58	516.78	PSS1B	FLAT - ORGANIC	II C 2	WETLAND	1027	1027					0.19					
3	G	2	516.78	516.80	PSS1/4B	FLAT - ORGANIC	II C 2, I A 3	WETLAND	137	137					0.03					
3	G	2	516.80	516.83	PSS1B	FLAT - ORGANIC	II C 2	WETLAND	137	137					0.03					
3	G	2	516.83	516.87	PSS1/4B	FLAT - ORGANIC	II C 2, I A 3	WETLAND	225	225					0.04					
3	G	2	516.87	516.88	PSS1B	FLAT - ORGANIC	II C 2	WETLAND	44	44					0.01					
3	G	2	516.88	516.90	PSS1/4B	FLAT - ORGANIC	II C 2, I A 3	WETLAND	87	87					0.02					
3	G	2	516.90	516.92	PSS1B	FLAT - ORGANIC	II C 2	WETLAND	141	141					0.03					
3	G	2	516.92	516.96	PSS1/4B	FLAT - ORGANIC	II C 2, I A 3	WETLAND	190	190					0.04					
3	G	2	516.96	516.97	PSS1B	FLAT - ORGANIC	II C 2	WETLAND	68	68					0.01					
3	G	2	516.97	517.02	PSS1/4B	FLAT - ORGANIC	II C 2, I A 3	WETLAND	239	239					0.05					

SPREAD	SECTION	ROW MODE	FROM MP	TO MP	NWI CODE	HGM CLASS	VIERECK	DESCRIPTION	LINEAR FEET	WETLAND FEET	UPLAND FEET	DISTURBED FEET	Comments	Mode 1 - Ice Workpad (miles)	Mode 2 - Frost Pack (miles)	Mode 3 - Timber Mats	Mode 4 - Granular Workpad	Mode 5A - Grade	Mode 5B - Mountain Grade	Stream & Flood Plain Crossings
3	G	2	517.02	517.36	PSS1B	FLAT - ORGANIC	II C 2	WETLAND	1801	1801					0.34					
3	G	2	517.36	517.38	PSS1/4B	FLAT - ORGANIC	II C 2, I A 3	WETLAND	108	108					0.02					
3	G	2	517.38	517.39	PSS1/EM1C	SLOPE	III A 2, II C 2	WETLAND	65	65					0.01					
3	G	2	517.39	517.51	PSS1/EM1B	SLOPE	II C 2, III A 2	WETLAND	634	634					0.12					
3	G	2	517.51	517.53	PSS1B	FLAT - ORGANIC	II C 2	WETLAND	126	126					0.02					
3	G	2	517.53	517.66	PSS1/EM1B	SLOPE	II C 2, III A 2	WETLAND	678	678					0.13					
3	G	2	517.66	517.68	PSS1/4B	FLAT - ORGANIC	II C 2, I A 3	WETLAND	89	89					0.02					
3	G	2	517.68	517.72	PSS1/EM1B	SLOPE	II C 2, III A 2	WETLAND	226	226					0.04					
3	G	2	517.72	517.75	PSS1/EM1C	SLOPE	II C 2, III A 2	WETLAND	164	164					0.03					
3	G	2	517.75	517.93	PSS1B	FLAT - ORGANIC	II C 2	WETLAND	923	923					0.17					
3	G	2	517.93	517.95	PFO4/SS4B	FLAT - ORGANIC	I A 2, II C 2	WETLAND	118	118					0.02					
3	G	2	517.95	518.10	PSS1B	FLAT - ORGANIC	II C 2	WETLAND	785	785					0.15					
3	G	2	518.10	518.11	PSS1/EM1C	SLOPE	II C 2	WETLAND	42	42					0.01					
3	G	2	518.11	518.21	PSS1B	FLAT - ORGANIC	II C 2	WETLAND	522	522					0.10					
3	G	2	518.21	518.38	PSS1B	SLOPE	II C 2, I A 3	WETLAND	933	933					0.18					
3	G	2	518.38	518.55	PSS1B	FLAT - ORGANIC	II C 2	WETLAND	887	887					0.17					
3	G	2	518.55	518.56	PSS1/4B	FLAT - ORGANIC	II A 3, II C 2	WETLAND	63	63					0.01					
3	G	2	518.56	518.57	U	N/A	I A 2, II B 2	UPLAND	31		31				0.01					
3	G	2	518.57	518.60	PSS1/EM1B	SLOPE	II B 2, III A 2	WETLAND	145	145					0.03					
3	G	2	518.60	518.61	PSS1C	SLOPE	II B 2	WETLAND	83	83					0.02					
3	G	2	518.61	518.62	U	N/A	II A 2	UPLAND	68		68				0.01					
3	G	2	518.62	518.63	PSS1C	SLOPE	II B 2	WETLAND	39	39					0.01					
3	G	2	518.63	518.71	PSS1B	FLAT - ORGANIC	II C 2	WETLAND	421	421					0.08					
3	G	2	518.71	518.76	PSS1/FO4B	FLAT - ORGANIC	I A 3, II C 2	WETLAND	280	280					0.05					
3	G	2	518.76	518.78	PSS1/EM1C	RIVERINE	II B 2, III A 2	WETLAND	100	100					0.02					
3	G	2	518.78	518.84	PSS1/FO4B	FLAT - ORGANIC	I A 3, II C 2	WETLAND	287	287					0.05					
3	G	2	518.84	518.88	PFO4/SS1B	FLAT - ORGANIC	I A 2, II B 2	WETLAND	247	247					0.05					
3	G	2	518.88	518.89	PSS1C	RIVERINE	II B 2	WETLAND	51	51					0.01					
3	G	2	518.89	518.91	PFO4/SS1B	FLAT - ORGANIC	I A 2, II B 2	WETLAND	72	72					0.01					
3	G	2	518.91	518.93	PSS1C	RIVERINE	II B 2	WETLAND	126	126					0.02					
3	G	2	518.93	519.14	PSS1/4B	FLAT - ORGANIC	II C 1, II A 2	WETLAND	1095	1095					0.21					
3	G	2	519.14	519.15	PFO4/SS4B	FLAT - ORGANIC	I A 2, II C 2	WETLAND	44	44					0.01					
3	G	2	519.15	519.15	PSS1/EM1C	SLOPE	I A 2, II B 2	WETLAND	11	11					0.00					
3	G	2	519.15	519.19	PFO4/SS4B	FLAT - ORGANIC	I A 2, II C 2	WETLAND	184	184					0.03					
3	G	2	519.19	519.20	PSS1/EM1C	SLOPE	I A 2, II B 2	WETLAND	87	87					0.02					
3	G	2	519.20	519.23	PSS1/4B	FLAT - ORGANIC	I A 3, II C 1	WETLAND	175	175					0.03					
3	G	2	519.23	519.24	PSS1/EM1C	SLOPE	I A 2, II B 2	WETLAND	36	36					0.01					
3	G	2	519.24	519.26	PSS1/EM1C	FLAT - ORGANIC	II C 2, III A 2	WETLAND	98	98					0.02					
3	G	2	519.26	519.28	PSS1/EM1C	SLOPE	I A 2, II B 2	WETLAND	86	86					0.02					
3	G	2	519.28	519.30	PSS1B	FLAT - ORGANIC	II C 1	WETLAND	114	114					0.02					
3	G	2	519.30	519.31	PSS1/EM1C	SLOPE	I A 2, II B 2	WETLAND	64	64					0.01					
3	G	2	519.31	519.39	PSS1B	FLAT - ORGANIC	II C 1	WETLAND	433	433					0.08					
3	G	2	519.39	519.54	U	N/A	I C 2, II B 2	UPLAND	764		764				0.14					
3	G	5A	519.54	519.55	U	N/A	I C 2, II B 2	UPLAND	55		55							0.01		
3	G	5A	519.55	519.55	PSS1/FO4B	FLAT - ORGANIC	II B 2, I A 3	WETLAND	35	35								0.01		
3	G	5A	519.55	519.60	U	N/A	I C 2, II B 2	UPLAND	240		240							0.05		
3	G	WB-W	519.60	519.61	U	N/A	I C 2, II B 2	UPLAND	60		60									0.01
3	G	5A	519.61	519.62	U	N/A	I C 2, II B 2	UPLAND	57		57							0.01		
3	G	5A	519.62	519.62	R3UBH	RIVERINE	NONE	WETLAND	8	8								0.00		
3	G	5A	519.62	519.73	U	N/A	I C 2, II C 2	UPLAND	577		577							0.11		
3	G	2	519.73	520.01	U	N/A	I C 2, II C 2	UPLAND	1488		1488				0.28					
3	G	2	520.01	520.03	U	N/A	I A 3, II C 1	UPLAND	87		87				0.02					
3	G	2	520.03	520.16	PSS1B	FLAT - ORGANIC	II C 1, I A 3	WETLAND	661	661					0.13					
3	G	2	520.16	520.22	PSS1/4B	FLAT - ORGANIC	II C 1, II A 2	WETLAND	335	335					0.06					
3	G	2	520.22	520.33	PSS1/EM1B	SLOPE	II C 1, III A 2	WETLAND	567	567					0.11					
3	G	2	520.33	520.38	PSS1/4B	FLAT - ORGANIC	II C 1, II A 2	WETLAND	267	267					0.05					
3	G	2	520.38	520.38	PSS1/EM1C	SLOPE	II C 2, III A 2	WETLAND	40	40					0.01					
3	G	2	520.38	520.71	PSS1/4B	FLAT - ORGANIC	II C 1, II A 2	WETLAND	1741	1741					0.33					
3	G	2	520.71	520.73	U	N/A	I A 2, II C 2	UPLAND	80		80				0.02					
3	G	2	520.73	520.74	PSS1/4B	FLAT - ORGANIC	II C 1, II A 2	WETLAND	44	44					0.01					
3	G	2	520.74	520.74	U	N/A	I A 2, II C 2	UPLAND	21		21				0.00					
3	G	2	520.74	520.75	PSS1/4B	FLAT - ORGANIC	II C 1, II A 2	WETLAND	47	47					0.01					
3	G	2	520.75	520.83	U	N/A	I A 2, II C 2	UPLAND	400		400				0.08					
3	H	5A	520.83	520.94	U	N/A	I A 2, II C 2	UPLAND	624		624							0.12		
3	H	5A	520.94	520.96	PSS1C	RIVERINE	II B 2	WETLAND	87	87								0.02		
3	H	5A	520.96	520.96	R3UBH	RIVERINE	NONE	WETLAND	9	9								0.00		
3	H	WB-S	520.96	520.96	R3UBH	RIVERINE	NONE	WETLAND	11	11										0.00
3	H	WB-S	520.96	520.97	PSS1C	RIVERINE	II B 2	WETLAND	54	54										0.01
3	H	WB-S	520.97	520.98	U	N/A	I C 2, II B 2	UPLAND	25		25									0.00
3	H	5A	520.98	521.00	U	N/A	I C 2, II B 2	UPLAND	82		82							0.02		
3	H	5A	521.00	521.00	PSS1C	RIVERINE	II B 2	WETLAND	33	33								0.01		
3	H	5A	521.00	521.03	U	N/A	I A 2, II B 2	UPLAND	129		129							0.02		

SPREAD	SECTION	ROW MODE	FROM MP	TO MP	NWI CODE	HGM CLASS	VIERECK	DESCRIPTION	LINEAR FEET	WETLAND FEET	UPLAND FEET	DISTURBED FEET	Comments	Mode 1 - Ice Workpad (miles)	Mode 2 - Frost Pack (miles)	Mode 3 - Timber Mats	Mode 4 - Granular Workpad	Mode 5A - Grade	Mode 5B - Mountain Grade	Stream & Flood Plain Crossings
3	H	5A	521.03	521.07	U	N/A	I C 2, II B 2	UPLAND	225		225							0.04		
3	H	5A	521.07	521.10	U	N/A	I A 3, II B 2	UPLAND	148		148							0.03		
3	H	5A	521.10	521.16	PSS1B	FLAT - ORGANIC	II C 1	WETLAND	354	354								0.07		
3	H	5A	521.16	521.19	U	N/A	I A 3, II B 2	UPLAND	164		164							0.03		
3	H	5A	521.19	521.20	PSS1B	FLAT - ORGANIC	II C 1	WETLAND	36	36								0.01		
3	H	5A	521.20	521.23	U	N/A	I A 3, II B 2	UPLAND	172		172							0.03		
3	H	5A	521.23	521.42	PSS1B	FLAT - ORGANIC	II C 1	WETLAND	969	969								0.18		
3	H	5A	521.42	521.45	U	N/A	II B 2, II C 2	UPLAND	166		166							0.03		
3	H	5A	521.45	521.48	U	N/A	II C 1, I A 3	UPLAND	149		149							0.03		
3	H	5A	521.48	521.52	U	N/A	I A 3, II B 2	UPLAND	236		236							0.04		
3	H	5A	521.52	521.54	U	N/A	II C 1, I A 3	UPLAND	89		89							0.02		
3	H	5A	521.54	521.57	U	N/A	II C 1	UPLAND	168		168							0.03		
3	H	5A	521.57	521.67	U	N/A	II C 1, I A 3	UPLAND	510		510							0.10		
3	H	5A	521.67	521.69	U	N/A	I B 1	UPLAND	116		116							0.02		
3	H	5A	521.69	521.71	U	N/A	II C 1, I A 3	UPLAND	106		106							0.02		
3	H	5A	521.71	521.71	U	N/A	I B 1	UPLAND	29		29							0.01		
3	H	5A	521.71	521.75	D	N/A	NONE	DISTURBED	195			195						0.04		
3	H	5A	521.75	522.00	U	N/A	I C 2, II B 2	UPLAND	1299		1299							0.25		
3	H	5A	522.00	522.01	PSS4/1B	FLAT - ORGANIC	II A 2, II C 2	WETLAND	56	56								0.01		
3	H	5A	522.01	522.11	U	N/A	I C 2, II B 2	UPLAND	558		558							0.11		
3	H	5A	522.11	522.13	PSS4/1B	FLAT - ORGANIC	II A 2, II C 2	WETLAND	60	60								0.01		
3	H	5A	522.13	522.17	PSS1B	FLAT - ORGANIC	II C 2	WETLAND	249	249								0.05		
3	H	5A	522.17	522.23	PSS4/1B	FLAT - ORGANIC	II A 2, II C 2	WETLAND	310	310								0.06		
3	H	5A	522.23	522.29	PSS1B	FLAT - ORGANIC	II C 2	WETLAND	303	303								0.06		
3	H	5A	522.29	522.31	PSS4/1B	FLAT - ORGANIC	II A 2, II C 2	WETLAND	88	88								0.02		
3	H	5A	522.31	522.73	U	N/A	I A 2, II B 2	UPLAND	2235		2235							0.42		
3	H	5A	522.73	522.74	PSS4/1B	FLAT - ORGANIC	II A 2, II C 2	WETLAND	43	43								0.01		
3	H	5A	522.74	522.77	PSS1B	FLAT - ORGANIC	II C 2	WETLAND	197	197								0.04		
3	H	5A	522.77	522.80	PSS4/1B	FLAT - ORGANIC	II A 2, II C 2	WETLAND	119	119								0.02		
3	H	5A	522.80	522.83	U	N/A	I A 2, II C 2	UPLAND	183		183							0.03		
3	H	5A	522.83	522.85	PSS1/4B	FLAT - ORGANIC	II C 2, III A 2	WETLAND	124	124								0.02		
3	H	5A	522.85	522.92	U	N/A	I A 2, II C 2	UPLAND	359		359							0.07		
3	H	5A	522.92	523.16	U	N/A	II C 2, I B 3	UPLAND	1270		1270							0.24		
3	H	5A	523.16	523.17	D	N/A	NONE	DISTURBED	49			49						0.01		
3	H	5A	523.17	523.21	PSS1B	DEPRESSIONAL	II B 1	WETLAND	217	217								0.04		
3	H	5A	523.21	523.27	U	N/A	II B 2, I B 3	UPLAND	289		289							0.05		
3	H	5A	523.27	523.36	U	N/A	I C 2	UPLAND	506		506							0.10		
3	H	5A	523.36	523.42	U	N/A	II B 2, I B 3	UPLAND	283		283							0.05		
3	H	5A	523.42	523.47	U	N/A	I C 2	UPLAND	284		284							0.05		
3	H	5A	523.47	523.47	PSS1C	RIVERINE	II B 2	WETLAND	9	9								0.00		
3	H	5A	523.47	523.52	U	N/A	I C 2	UPLAND	223		223							0.04		
3	H	5A	523.52	523.53	PSS1/4B	FLAT - ORGANIC	II C 1, II A 3	WETLAND	75	75								0.01		
3	H	5A	523.53	523.55	U	N/A	I C 2	UPLAND	129		129							0.02		
3	H	WB-S	523.55	523.57	U	N/A	I C 2	UPLAND	60		60									0.01
3	H	5A	523.57	523.79	U	N/A	I C 2	UPLAND	1188		1188							0.22		
3	H	5A	523.79	523.79	PSS1B	FLAT - ORGANIC	II C 2	WETLAND	19	19								0.00		
3	H	5A	523.79	523.80	U	N/A	I C 2	UPLAND	19		19							0.00		
3	H	5A	523.80	523.97	PSS1B	FLAT - ORGANIC	II C 2	WETLAND	911	911								0.17		
3	H	5A	523.97	524.05	PSS1/4B	FLAT - ORGANIC	II C 2, I A 3	WETLAND	407	407								0.08		
3	H	5A	524.05	524.34	PSS1B	FLAT - ORGANIC	II C 2	WETLAND	1544	1544								0.29		
3	H	5A	524.34	525.36	U	N/A	I A 2, II C 2	UPLAND	5397		5397							1.02		
3	H	5A	525.36	525.39	PSS4/1B	FLAT - ORGANIC	II A 2, II C 2	WETLAND	148	148								0.03		
3	H	5A	525.39	525.45	U	N/A	I A 2, II C 2	UPLAND	296		296							0.06		
3	H	5A	525.45	525.46	PSS4/FO4B	FLAT - ORGANIC	II A 2, II C 2	WETLAND	74	74								0.01		
3	H	5A	525.46	525.49	U	N/A	I A 2, II C 2	UPLAND	152		152							0.03		
3	H	5A	525.49	525.51	PSS4/1B	FLAT - ORGANIC	II A 2, II C 2	WETLAND	97	97								0.02		
3	H	5A	525.51	525.83	U	N/A	I A 2, II C 2	UPLAND	1705		1705							0.32		
3	H	WB-S	525.83	525.85	U	N/A	I A 2, II C 2	UPLAND	103		103									0.02
3	H	WB-S	525.85	525.91	R4SB	RIVERINE	NONE	WETLAND	312	312										0.06
3	H	WB-S	525.91	525.97	PSS1A	RIVERINE	II C 2	WETLAND	339	339										0.06
3	H	WB-S	525.97	525.99	U	N/A	I C 2, II C 2	UPLAND	76		76									0.01
3	H	5A	525.99	526.31	U	N/A	I C 2, II C 2	UPLAND	1679		1679							0.32		
3	H	5A	526.31	526.41	PSS1/EM1B	FLAT - ORGANIC	II C 2, III A 2	WETLAND	571	571								0.11		
3	H	5A	526.41	526.44	U	N/A	I C 2, II C 2	UPLAND	149		149							0.03		
3	H	5A	526.44	526.46	PSS1/EM1B	FLAT - ORGANIC	II C 2, III A 2	WETLAND	76	76								0.01		
3	H	5A	526.46	526.51	U	N/A	I C 2, II C 2	UPLAND	287		287							0.05		
3	H	5A	526.51	526.62	PSS1/EM1B	FLAT - ORGANIC	II C 2, III A 2	WETLAND	555	555								0.11		
3	H	5A	526.62	526.73	U	N/A	I C 3, II C 2	UPLAND	614		614							0.12		
3	H	5A	526.73	526.74	D	N/A	NONE	DISTURBED	26			26						0.00		
3	H	5A	526.74	526.75	U	N/A	I B 1	UPLAND	90		90							0.02		
3	H	5A	526.75	526.77	U	N/A	I C 3, II C 2	UPLAND	87		87							0.02		
3	H	5A	526.77	526.93	PSS1/4B	FLAT - ORGANIC	II A 3, II C 2	WETLAND	839	839								0.16		

SPREAD	SECTION	ROW MODE	FROM MP	TO MP	NWI CODE	HGM CLASS	VIERECK	DESCRIPTION	LINEAR FEET	WETLAND FEET	UPLAND FEET	DISTURBED FEET	Comments	Mode 1 - Ice Workpad (miles)	Mode 2 - Frost Pack (miles)	Mode 3 - Timber Mats	Mode 4 - Granular Workpad	Mode 5A - Grade	Mode 5B - Mountain Grade	Stream & Flood Plain Crossings
3	H	5A	526.93	526.95	U	N/A	I B 1, II B 2	UPLAND	111		111							0.02		
3	H	5A	526.95	526.96	D	N/A	NONE	DISTURBED	73			73						0.01		
3	H	5A	526.96	527.22	U	N/A	II B 2	UPLAND	1343		1343							0.25		
3	H	5A	527.22	527.22	D	N/A	NONE	DISTURBED	19			19						0.00		
3	H	5A	527.22	527.39	U	N/A	II B 2	UPLAND	910		910							0.17		
3	H	5A	527.39	527.42	PSS1/EM1B	SLOPE	II C 2, III A 2	WETLAND	125	125								0.02		
3	H	5A	527.42	527.56	U	N/A	II B 2	UPLAND	733		733							0.14		
3	H	4	527.56	527.59	U	N/A	II B 2	UPLAND	191		191						0.04			
3	H	4	527.59	527.62	PSS1/EM1B	SLOPE	II C 2, III A 2	WETLAND	160	160							0.03			
3	H	4	527.62	527.64	PSS1/EM1C	SLOPE	II B 2, II C 2	WETLAND	81	81							0.02			
3	H	4	527.64	527.70	PSS1B	FLAT - ORGANIC	II C 2	WETLAND	338	338							0.06			
3	H	4	527.70	527.71	PSS1/EM1C	SLOPE	II B 2, II C 2	WETLAND	48	48							0.01			
3	H	4	527.71	527.74	PSS1B	FLAT - ORGANIC	II C 2	WETLAND	155	155							0.03			
3	H	4	527.74	527.76	PSS1/EM1C	SLOPE	II B 2, II C 2	WETLAND	74	74							0.01			
3	H	4	527.76	527.81	PSS1B	FLAT - ORGANIC	II C 2	WETLAND	295	295							0.06			
3	H	4	527.81	527.83	PSS1/EM1C	SLOPE	II B 2, II C 2	WETLAND	93	93							0.02			
3	H	4	527.83	527.88	PSS1B	FLAT - ORGANIC	II C 2	WETLAND	252	252							0.05			
3	H	4	527.88	527.90	PSS1/EM1C	SLOPE	II B 2, II C 2	WETLAND	141	141							0.03			
3	H	4	527.90	528.00	PSS1/EM1B	SLOPE	II C 2, III A 2	WETLAND	501	501							0.09			
3	H	4	528.00	528.00	U	N/A	II B 2	UPLAND	3		3						0.00			
3	H	4	528.00	528.01	PSS1/EM1B	SLOPE	II C 2, III A 2	WETLAND	54	54							0.01			
3	H	4	528.01	528.01	U	N/A	II B 2	UPLAND	13		13						0.00			
3	H	4	528.01	528.03	PSS1/4B	SLOPE	II C 2, II A 3	WETLAND	119	119							0.02			
3	H	4	528.03	528.04	PSS1/EM1B	SLOPE	II C 2, III A 2	WETLAND	31	31							0.01			
3	H	4	528.04	528.10	PSS1/4B	SLOPE	II C 2, II A 3	WETLAND	317	317							0.06			
3	H	4	528.10	528.13	U	N/A	I A 2, II B 2	UPLAND	137		137						0.03			
3	H	4	528.13	528.13	PSS4/FO4B	FLAT - ORGANIC	II A 2, I A 2	WETLAND	30	30							0.01			
3	H	4	528.13	528.14	U	N/A	I A 2, II B 2	UPLAND	61		61						0.01			
3	H	4	528.14	528.17	PSS1/EM1B	SLOPE	II C 2, III A 2	WETLAND	115	115							0.02			
3	H	4	528.17	528.17	U	N/A	II B 2, I A 3	UPLAND	52		52						0.01			
3	H	4	528.17	528.21	PSS1/EM1B	SLOPE	II C 2, III A 2	WETLAND	197	197							0.04			
3	H	4	528.21	528.24	U	N/A	I A 2, II C 2	UPLAND	172		172						0.03			
3	H	4	528.24	528.26	U	N/A	I A 2, II C 2	UPLAND	81		81						0.02			
3	H	4	528.26	528.28	PSS4/1B	SLOPE	II A 2, II C 2	WETLAND	95	95							0.02			
3	H	4	528.28	528.33	U	N/A	I A 2, II B 2	UPLAND	279		279						0.05			
3	H	4	528.33	528.34	PSS4/1B	SLOPE	II A 2, II C 2	WETLAND	45	45							0.01			
3	H	4	528.34	528.49	U	N/A	I A 2, II B 2	UPLAND	784		784						0.15			
3	H	4	528.49	528.60	PSS4/1B	SLOPE	II A 2, II C 2	WETLAND	609	609							0.12			
3	H	4	528.60	528.82	PSS1/EM1B	SLOPE	II C 2, III A 2	WETLAND	1155	1155							0.22			
3	H	4	528.82	528.93	U	N/A	I A 2, II B 2	UPLAND	579		579						0.11			
3	H	4	528.93	529.34	PSS1/EM1B	SLOPE	II C 2, III A 2	WETLAND	2173	2173							0.41			
3	H	4	529.34	529.43	U	N/A	I A 2, II C 2	UPLAND	443		443						0.08			
3	H	4	529.43	529.45	U	N/A	I A 2, II C 2	UPLAND	118		118						0.02			
3	H	4	529.45	529.52	U	N/A	I A 2, II C 2	UPLAND	354		354						0.07			
3	H	4	529.52	529.54	PSS1/EM1B	SLOPE	II C 2, III A 2	WETLAND	104	104							0.02			
3	H	4	529.54	529.54	D	N/A	NONE	DISTURBED	32			32					0.01			
3	H	4	529.54	529.58	U	N/A	I A 2, II C 2	UPLAND	194		194						0.04			
3	H	4	529.58	529.74	PSS1/EM1B	SLOPE	II C 1, III A 2	WETLAND	841	841							0.16			
3	H	4	529.74	529.75	PSS1C	FLAT - ORGANIC	II C 1, III A 3	WETLAND	45	45							0.01			
3	H	4	529.75	529.77	PSS1/EM1B	FLAT - ORGANIC	II C 1, III A 2	WETLAND	143	143							0.03			
3	H	4	529.77	529.78	PSS1C	FLAT - ORGANIC	II C 1, III A 3	WETLAND	46	46							0.01			
3	H	4	529.78	529.79	PSS1/EM1B	FLAT - ORGANIC	II C 1, III A 2	WETLAND	34	34							0.01			
3	H	4	529.79	529.79	PSS1C	FLAT - ORGANIC	II C 1, III A 3	WETLAND	24	24							0.00			
3	H	4	529.79	529.79	PSS1/EM1B	FLAT - ORGANIC	II C 1, III A 2	WETLAND	2	2							0.00			
3	H	4	529.79	529.80	PSS1C	FLAT - ORGANIC	II C 1, III A 3	WETLAND	14	14							0.00			
3	H	4	529.80	529.81	PSS1/EM1B	FLAT - ORGANIC	II C 1, III A 2	WETLAND	88	88							0.02			
3	H	4	529.81	529.82	PSS1C	FLAT - ORGANIC	II C 1, III A 3	WETLAND	53	53							0.01			
3	H	4	529.82	529.85	PSS1/EM1B	SLOPE	II C 1, III A 2	WETLAND	147	147							0.03			
3	H	4	529.85	529.92	PSS1/EM1B	FLAT - ORGANIC	II C 1, III A 2	WETLAND	334	334							0.06			
3	H	4	529.92	530.03	PSS1/EM1B	SLOPE	II C 1, III A 2	WETLAND	602	602							0.11			
3	H	5A	530.03	530.03	PSS1/EM1B	SLOPE	II C 1, III A 2	WETLAND	9	9								0.00		
3	H	5A	530.03	530.15	U	N/A	I A 2, II C 2	UPLAND	626		626							0.12		
3	H	4	530.15	530.16	U	N/A	I A 2, II C 2	UPLAND	55		55						0.01			
3	H	5A	530.16	530.35	U	N/A	I A 2, II C 2	UPLAND	1007		1007							0.19		
3	H	5A	530.35	530.36	R4SB	RIVERINE	NONE	WETLAND	72	72								0.01		
3	H	WB-S	530.36	530.37	R4SB	RIVERINE	NONE	WETLAND	24	24										0.00
3	H	WB-S	530.37	530.38	U	N/A	II B 2, II C 2	UPLAND	36		36									0.01
3	H	5A	530.38	530.44	U	N/A	II B 2, II C 2	UPLAND	352		352							0.07		
3	H	5A	530.44	530.45	PSS1C	SLOPE	II B 2, II C 2	WETLAND	61	61								0.01		
3	H	5A	530.45	530.46	PSS1/EM1B	SLOPE	II C 1, III A 2	WETLAND	21	21								0.00		
3	H	5A	530.46	530.51	PSS1/EM1B	FLAT - ORGANIC	II C 1, III A 2	WETLAND	251	251								0.05		
3	H	5A	530.51	530.51	PSS1/EM1B	SLOPE	II C 1, III A 2	WETLAND	18	18								0.00		

SPREAD	SECTION	ROW MODE	FROM MP	TO MP	NWI CODE	HGM CLASS	VIERECK	DESCRIPTION	LINEAR FEET	WETLAND FEET	UPLAND FEET	DISTURBED FEET	Comments	Mode 1 - Ice Workpad (miles)	Mode 2 - Frost Pack (miles)	Mode 3 - Timber Mats	Mode 4 - Granular Workpad	Mode 5A - Grade	Mode 5B - Mountain Grade	Stream & Flood Plain Crossings
3	H	5A	530.51	530.51	PSS1C	SLOPE	II B 2, II C 2	WETLAND	19	19								0.00		
3	H	5A	530.51	530.54	U	N/A	II B 2, II C 2	UPLAND	124		124							0.02		
3	H	5A	530.54	530.54	PSS1/EM1B	SLOPE	II C 1, III A 2	WETLAND	8	8								0.00		
3	H	5A	530.54	530.55	PSS1B	FLAT - ORGANIC	II C 1, II B 2	WETLAND	74	74								0.01		
3	H	5A	530.55	530.57	PSS1/EM1B	SLOPE	II C 1, III A 2	WETLAND	121	121								0.02		
3	H	5A	530.57	530.61	PSS1/EM1B	FLAT - ORGANIC	II C 1, III A 2	WETLAND	200	200								0.04		
3	H	5A	530.61	530.62	PSS1/EM1B	SLOPE	II C 1, III A 2	WETLAND	39	39								0.01		
3	H	5A	530.62	530.70	PSS1/EM1B	FLAT - ORGANIC	II C 1, III A 2	WETLAND	406	406								0.08		
3	H	5A	530.70	530.71	PSS1/EM1B	SLOPE	II C 1, III A 2	WETLAND	58	58								0.01		
3	H	5A	530.71	530.73	PSS1/EM1B	FLAT - ORGANIC	II C 1, III A 2	WETLAND	113	113								0.02		
3	H	5A	530.73	530.74	PSS1/EM1B	SLOPE	II C 1, III A 2	WETLAND	48	48								0.01		
3	H	5A	530.74	530.77	PSS1/EM1B	FLAT - ORGANIC	II C 1, III A 2	WETLAND	182	182								0.03		
3	H	5A	530.77	530.78	PSS1A	SLOPE	II B 1	WETLAND	40	40								0.01		
3	H	5A	530.78	530.82	PSS1/EM1B	FLAT - ORGANIC	II C 1, III A 2	WETLAND	217	217								0.04		
3	H	5A	530.82	530.83	PSS1A	SLOPE	II B 1	WETLAND	56	56								0.01		
3	H	5A	530.83	530.87	PSS1/EM1B	SLOPE	II C 1, III A 2	WETLAND	180	180								0.03		
3	H	5A	530.87	530.93	PSS1/EM1B	FLAT - ORGANIC	II C 1, III A 2	WETLAND	354	354								0.07		
3	H	5A	530.93	530.94	PSS1/EM1B	SLOPE	II C 1, III A 2	WETLAND	42	42								0.01		
3	H	5A	530.94	530.95	PSS1/EM1B	SLOPE	II C 1, III A 2	WETLAND	40	40								0.01		
3	H	5A	530.95	531.04	PSS1/EM1B	FLAT - ORGANIC	II C 2, III A 2	WETLAND	498	498								0.09		
3	H	5A	531.04	531.05	PSS1C	SLOPE	II B 2, II C 2	WETLAND	44	44								0.01		
3	H	5A	531.05	531.06	PSS1/EM1B	SLOPE	II C 2, III A 2	WETLAND	38	38								0.01		
3	H	5A	531.06	531.07	PSS1/EM1B	FLAT - ORGANIC	II C 2, III A 2	WETLAND	69	69								0.01		
3	H	5A	531.07	531.07	PSS1/EM1B	SLOPE	II C 2, III A 2	WETLAND	11	11								0.00		
3	H	5A	531.07	531.08	PSS1/EM1B	FLAT - ORGANIC	II C 2, III A 2	WETLAND	25	25								0.00		
3	H	5A	531.08	531.09	U	N/A	I A 3, II B 1	UPLAND	39		39							0.01		
3	H	5A	531.09	531.10	U	N/A	I A 3, II B 1	UPLAND	101		101							0.02		
3	H	5A	531.10	531.11	PSS1/EM1B	FLAT - ORGANIC	II C 2, III A 2	WETLAND	27	27								0.01		
3	H	5A	531.11	531.11	PSS1/EM1B	SLOPE	II C 2, III A 2	WETLAND	19	19								0.00		
3	H	5A	531.11	531.12	PSS1/EM1B	FLAT - ORGANIC	II C 2, III A 2	WETLAND	41	41								0.01		
3	H	5A	531.12	531.16	PSS1/EM1B	SLOPE	II C 2, III A 2	WETLAND	185	185								0.03		
3	H	5A	531.16	531.17	PSS1/EM1B	FLAT - ORGANIC	II C 2, III A 2	WETLAND	86	86								0.02		
3	H	5A	531.17	531.18	PSS1/EM1B	SLOPE	II C 2, III A 2	WETLAND	36	36								0.01		
3	H	5A	531.18	531.23	U	N/A	II B 2, I A 3	UPLAND	264		264							0.05		
3	H	5A	531.23	531.24	PSS1/EM1B	SLOPE	II C 2, III A 2	WETLAND	72	72								0.01		
3	H	5A	531.24	531.37	PSS1B	FLAT - ORGANIC	II C 2	WETLAND	659	659								0.12		
3	H	5A	531.37	531.43	U	N/A	II B 2, I A 3	UPLAND	312		312							0.06		
3	H	WB-S	531.43	531.43	U	N/A	II B 2, I A 3	UPLAND	14		14									0.00
3	H	WB-S	531.43	531.44	R4SB	RIVERINE	NONE	WETLAND	36	36										0.01
3	H	WB-S	531.44	531.44	U	N/A	I A 2, II B 2	UPLAND	41		41									0.01
3	H	5A	531.44	531.66	U	N/A	I A 2, II B 2	UPLAND	1141		1141							0.22		
3	H	5A	531.66	531.66	D	N/A	NONE	DISTURBED	20			20						0.00		
3	H	5A	531.66	531.86	U	N/A	I A 2, II B 2	UPLAND	1029		1029							0.19		
3	H	WB-S	531.86	531.87	U	N/A	I A 2, II B 2	UPLAND	60		60									0.01
3	H	5A	531.87	532.01	U	N/A	I A 2, II B 2	UPLAND	717		717							0.14		
3	I	WB-S	532.01	532.06	U	N/A	I A 2, II B 2	UPLAND	264		264									0.05
3	I	WB-S	532.06	532.07	D	N/A	NONE	DISTURBED	84			84								0.02
3	I	WB-S	532.07	532.11	U	N/A	I C 2, II B 2	UPLAND	200		200									0.04
3	I	WB-S	532.11	532.15	R3UBH	RIVERINE	NONE	WETLAND	202	202										0.04
3	I	WB-S	532.15	532.23	U	N/A	II B 1, I C 3	UPLAND	437		437									0.08
3	I	5A	532.23	532.36	U	N/A	II B 1, I C 3	UPLAND	692		692							0.13		
3	I	5A	532.36	532.37	D	N/A	NONE	DISTURBED	50			50						0.01		
3	I	5A	532.37	532.41	U	N/A	II B 1, I C 3	UPLAND	187		187							0.04		
3	I	WB-S	532.41	532.42	U	N/A	II B 1, I C 3	UPLAND	60		60									0.01
3	I	5A	532.42	532.75	U	N/A	II B 1, I C 3	UPLAND	1734		1734							0.33		
3	I	WB-S	532.75	532.76	U	N/A	II B 1, I C 3	UPLAND	57		57									0.01
3	I	5A	532.76	532.86	U	N/A	II B 1, I C 3	UPLAND	526		526							0.10		
3	I	5A	532.86	532.95	U	N/A	I A 2, II B 1	UPLAND	473		473							0.09		
3	I	5A	532.95	533.01	D	N/A	NONE	DISTURBED	349			349						0.07		
3	I	5A	533.01	533.14	U	N/A	II B 1, I A 3	UPLAND	693		693							0.13		
3	I	WB-S	533.14	533.16	U	N/A	II B 1, I A 3	UPLAND	64		64									0.01
3	I	5A	533.16	533.16	U	N/A	II B 1, I A 3	UPLAND	5		5							0.00		
3	I	5A	533.16	533.27	U	N/A	I C 2, II B 1	UPLAND	595		595							0.11		
3	I	5A	533.27	533.42	U	N/A	I A 2, II B 2	UPLAND	821		821							0.16		
3	I	5A	533.42	533.45	U	N/A	II B 1, I A 3	UPLAND	148		148							0.03		
3	I	5A	533.45	533.47	U	N/A	I A 2, II B 2	UPLAND	99		99							0.02		
3	I	5A	533.47	533.52	U	N/A	II B 1, I A 3	UPLAND	235		235							0.04		
3	I	5A	533.52	533.52	D	N/A	NONE	DISTURBED	23			23						0.00		
3	I	5A	533.52	533.86	U	N/A	II B 1, I A 3	UPLAND	1797		1797							0.34		
3	I	WB-S	533.86	533.92	U	N/A	II B 1, I A 3	UPLAND	325		325									0.06
3	I	WB-S	533.92	533.94	U	N/A	I A 2, II B 2	UPLAND	75		75									0.01
3	I	5A	533.94	533.96	U	N/A	I A 2, II B 2	UPLAND	131		131							0.02		

SPREAD	SECTION	ROW MODE	FROM MP	TO MP	NWI CODE	HGM CLASS	VIERECK	DESCRIPTION	LINEAR FEET	WETLAND FEET	UPLAND FEET	DISTURBED FEET	Comments	Mode 1 - Ice Workpad (miles)	Mode 2 - Frost Pack (miles)	Mode 3 - Timber Mats	Mode 4 - Granular Workpad	Mode 5A - Grade	Mode 5B - Mountain Grade	Stream & Flood Plain Crossings
3	I	5A	533.96	534.10	U	N/A	II B 1, I C 3	UPLAND	743		743							0.14		
3	I	5A	534.10	534.20	D	N/A	NONE	DISTURBED	506			506						0.10		
3	I	5A	534.20	534.26	U	N/A	II B 1, I C 3	UPLAND	305		305							0.06		
3	I	WB-S	534.26	534.27	U	N/A	II B 1, I C 3	UPLAND	69		69									0.01
3	I	5A	534.27	534.30	U	N/A	II B 1, I C 3	UPLAND	175		175							0.03		
3	I	5A	534.30	534.41	U	N/A	I A 2, II B 2	UPLAND	552		552							0.10		
3	I	5A	534.41	534.54	U	N/A	II B 1, I C 3	UPLAND	685		685							0.13		
3	I	5A	534.54	534.73	U	N/A	I A 2, II B 2	UPLAND	1036		1036							0.20		
3	I	5A	534.73	534.79	U	N/A	II B 1, I C 3	UPLAND	286		286							0.05		
3	I	5A	534.79	534.79	U	N/A	I C 2, II B 2	UPLAND	4		4							0.00		
3	I	5A	534.79	534.81	D	N/A	NONE	DISTURBED	96			96						0.02		
3	I	5A	534.81	534.83	U	N/A	II B 1	UPLAND	120		120							0.02		
3	I	5A	534.83	534.84	U	N/A	I C 2, II B 2	UPLAND	35		35							0.01		
3	I	5A	534.84	534.90	U	N/A	II B 1	UPLAND	318		318							0.06		
3	I	WB-S	534.90	534.91	U	N/A	II B 1	UPLAND	90		90									0.02
3	I	5A	534.91	534.94	U	N/A	II B 1	UPLAND	164		164							0.03		
3	I	5A	534.94	535.09	U	N/A	I A 2, II B 2	UPLAND	767		767							0.15		
3	I	WB-S	535.09	535.09	U	N/A	I A 2, II B 2	UPLAND	1		1									0.00
3	I	WB-S	535.09	535.11	U	N/A	II B 1, I C 3	UPLAND	88		88									0.02
3	I	5A	535.11	535.22	U	N/A	II B 1, I C 3	UPLAND	583		583							0.11		
3	J	5A	535.22	535.31	U	N/A	III A 1, II B 2	UPLAND	489		489							0.09		
3	J	5A	535.31	535.31	D	N/A	NONE	DISTURBED	2			2						0.00		
3	J	5A	535.31	535.67	U	N/A	III A 1, II B 2	UPLAND	1926		1926							0.36		
3	J	5A	535.67	535.71	D	N/A	NONE	DISTURBED	167			167						0.03		
3	J	5A	535.71	535.94	U	N/A	III A 1, II B 2	UPLAND	1244		1244							0.24		
3	J	5A	535.94	535.94	D	N/A	NONE	DISTURBED	17			17						0.00		
3	J	5A	535.94	536.03	U	N/A	III A 1, II B 2	UPLAND	439		439							0.08		
3	J	5A	536.03	536.08	D	N/A	NONE	DISTURBED	288			288						0.05		
3	J	5A	536.08	536.21	U	N/A	I A 2, II B 2	UPLAND	660		660							0.13		
3	J	WB-S	536.21	536.22	U	N/A	I A 2, II B 2	UPLAND	60		60									0.01
3	J	5A	536.22	536.57	U	N/A	I A 2, II B 2	UPLAND	1830		1830							0.35		
3	J	5B	536.57	536.67	U	N/A	I A 2, II B 2	UPLAND	570		570								0.11	
3	J	5A	536.67	536.70	U	N/A	I A 2, II B 2	UPLAND	120		120							0.02		
3	J	5B	536.70	536.70	U	N/A	I A 2, II B 2	UPLAND	30		30								0.01	
3	J	5A	536.70	536.73	U	N/A	I A 2, II B 2	UPLAND	168		168							0.03		
3	J	5A	536.73	536.75	U	N/A	I C 2, II B 1	UPLAND	102		102							0.02		
3	J	5B	536.75	536.93	U	N/A	I C 2, II B 1	UPLAND	914		914								0.17	
3	J	5B	536.93	537.00	U	N/A	I B 1, II B 1	UPLAND	406		406								0.08	
3	J	5A	537.00	537.02	U	N/A	I B 1, II B 1	UPLAND	99		99							0.02		
3	J	5A	537.02	537.03	U	N/A	I C 2, II B 1	UPLAND	21		21							0.00		
3	J	WB-S	537.03	537.04	U	N/A	I C 2, II B 1	UPLAND	60		60									0.01
3	J	5A	537.04	537.11	U	N/A	I C 2, II B 1	UPLAND	371		371							0.07		
3	J	5A	537.11	537.14	U	N/A	I C 2, II B 2	UPLAND	169		169							0.03		
3	J	5B	537.14	537.18	U	N/A	I C 2, II B 2	UPLAND	236		236								0.04	
3	J	5B	537.18	537.19	U	N/A	I C 2, II B 1	UPLAND	35		35								0.01	
3	J	5B	537.19	537.63	U	N/A	I C 2, II B 2	UPLAND	2339		2339								0.44	
3	J	5A	537.63	537.72	U	N/A	I C 2, II B 2	UPLAND	450		450							0.09		
3	J	5B	537.72	537.80	U	N/A	I C 2, II B 2	UPLAND	420		420								0.08	
3	J	5A	537.80	537.87	U	N/A	I C 2, II B 2	UPLAND	393		393							0.07		
3	J	WB-S	537.87	537.92	U	N/A	I C 2, II B 2	UPLAND	269		269									0.05
3	J	WB-S	537.92	537.94	U	N/A	I A 2, II B 2	UPLAND	92		92									0.02
3	J	5A	537.94	538.03	U	N/A	I A 2, II B 2	UPLAND	453		453							0.09		
3	J	5A	538.03	538.13	PSS1/4B	SLOPE	II B 2, II A 2	WETLAND	569	569								0.11		
3	J	5A	538.13	538.30	U	N/A	I A 2, II B 2	UPLAND	850		850							0.16		
3	J	5A	538.30	538.33	PSS4/1B	FLAT - ORGANIC	II A 2, II C 2	WETLAND	207	207								0.04		
3	J	5A	538.33	538.36	U	N/A	I A 2, II B 2	UPLAND	138		138							0.03		
3	J	5B	538.36	538.37	U	N/A	I A 2, II B 2	UPLAND	30		30								0.01	
3	J	5A	538.37	538.41	U	N/A	I A 2, II B 2	UPLAND	218		218							0.04		
3	J	5A	538.41	538.50	PSS1/4B	FLAT - ORGANIC	II A 3, II C 2	WETLAND	480	480								0.09		
3	J	5A	538.50	538.52	U	N/A	I A 2	UPLAND	112		112							0.02		
3	J	5A	538.52	538.54	U	N/A	I A 2, II B 2	UPLAND	88		88							0.02		
3	J	5A	538.54	538.55	U	N/A	I A 2	UPLAND	52		52							0.01		
3	J	5A	538.55	538.56	PFO4/SS1B	SLOPE	I A 2, II C 2	WETLAND	82	82								0.02		
3	J	5A	538.56	538.58	U	N/A	I A 2	UPLAND	108		108							0.02		
3	J	WB-S	538.58	538.59	U	N/A	I A 2	UPLAND	49		49									0.01
3	J	WB-S	538.59	538.59	PSS1A	RIVERINE	II B 2	WETLAND	11	11										0.00
3	J	WB-S	538.59	538.60	R3UBH	RIVERINE	NONE	WETLAND	13	13										0.00
3	J	WB-S	538.60	538.60	U	N/A	II B 2	UPLAND	16		16									0.00
3	J	5A	538.60	538.61	U	N/A	II B 2	UPLAND	66		66							0.01		
3	J	5A	538.61	538.62	U	N/A	I A 3, II C 2	UPLAND	24		24							0.00		
3	J	5A	538.62	538.67	U	N/A	I A 2, II C 2	UPLAND	285		285							0.05		
3	J	5A	538.67	538.76	PSS1/4B	FLAT - ORGANIC	II C 2, II A 2	WETLAND	455	455								0.09		

SPREAD	SECTION	ROW MODE	FROM MP	TO MP	NWI CODE	HGM CLASS	VIERECK	DESCRIPTION	LINEAR FEET	WETLAND FEET	UPLAND FEET	DISTURBED FEET	Comments	Mode 1 - Ice Workpad (miles)	Mode 2 - Frost Pack (miles)	Mode 3 - Timber Mats	Mode 4 - Granular Workpad	Mode 5A - Grade	Mode 5B - Mountain Grade	Stream & Flood Plain Crossings
3	J	5A	538.76	538.80	U	N/A	I A 2, II C 2	UPLAND	238		238							0.04		
3	J	5A	538.80	538.86	PSS1/4B	FLAT - ORGANIC	II C 2, II A 2	WETLAND	322	322								0.06		
3	K	5A	538.86	538.96	U	N/A	I A 2, II C 2	UPLAND	519		519							0.10		
3	K	5A	538.96	538.99	PSS1/4B	FLAT - ORGANIC	II C 2, II A 3	WETLAND	143	143								0.03		
3	K	5A	538.99	539.08	U	N/A	I A 2, II C 2	UPLAND	497		497							0.09		
3	K	5A	539.08	539.22	PSS4/1B	SLOPE	II A 2, II C 2	WETLAND	739	739								0.14		
3	K	5A	539.22	539.22	U	N/A	I A 2, II C 2	UPLAND	1		1							0.00		
3	K	5A	539.22	539.24	PSS4/1B	SLOPE	II A 2, II C 2	WETLAND	100	100								0.02		
3	K	5A	539.24	539.24	PEM1E	DEPRESSIONAL	III A 2	WETLAND	22	22								0.00		
3	K	5A	539.24	539.26	PSS4/1B	SLOPE	II A 2, II C 2	WETLAND	74	74								0.01		
3	K	5A	539.26	539.38	U	N/A	I A 2, II C 2	UPLAND	647		647							0.12		
3	K	5A	539.38	539.48	PSS1/4B	SLOPE	II A 3, II C 2	WETLAND	509	509								0.10		
3	K	5A	539.48	539.50	U	N/A	I A 2, II C 1	UPLAND	100		100							0.02		
3	K	WB-S	539.50	539.50	U	N/A	I A 2, II C 1	UPLAND	1		1									0.00
3	K	WB-S	539.50	539.51	PFO4B	SLOPE	I A 2, II C 2	WETLAND	59	59										0.01
3	K	5A	539.51	539.52	PFO4B	SLOPE	I A 2, II C 2	WETLAND	70	70								0.01		
3	K	5A	539.52	539.53	PSS1/4B	FLAT - ORGANIC	II A 3, II C 2	WETLAND	24	24								0.00		
3	K	5A	539.53	539.77	U	N/A	I A 3, II C 2	UPLAND	1300		1300							0.25		
3	K	5A	539.77	539.77	PSS1/FO4B	FLAT - ORGANIC	I A 3, II C 2	WETLAND	1	1								0.00		
3	K	5A	539.77	539.81	U	N/A	I A 3, II C 2	UPLAND	198		198							0.04		
3	K	5A	539.81	539.90	PSS1/FO4B	FLAT - ORGANIC	I A 3, II C 2	WETLAND	459	459								0.09		
3	K	5A	539.90	539.94	U	N/A	I A 3, II C 2	UPLAND	226		226							0.04		
3	K	5A	539.94	540.11	PSS1/FO4B	FLAT - ORGANIC	I A 3, II C 2	WETLAND	923	923								0.17		
3	K	5A	540.11	540.22	PSS1/4B	SLOPE	II A 3, II C 2	WETLAND	578	578								0.11		
3	K	5A	540.22	540.35	PSS4/1B	SLOPE	II A 2, II C 2	WETLAND	644	644								0.12		
3	K	5A	540.35	540.48	PSS1/FO4B	SLOPE	I A 3, II C 2	WETLAND	687	687								0.13		
3	K	5A	540.48	540.51	U	N/A	I A 3, II C 2	UPLAND	203		203							0.04		
3	K	5A	540.51	540.63	U	N/A	I A 3, II C 2	UPLAND	614		614							0.12		
3	K	5A	540.63	540.73	U	N/A	I A 3, II C 2	UPLAND	531		531							0.10		
3	K	5A	540.73	540.76	PSS1/4B	SLOPE	II C 2, I A 3	WETLAND	141	141								0.03		
3	K	5A	540.76	541.02	U	N/A	I A 3, II C 2	UPLAND	1399		1399							0.26		
3	K	5A	541.02	541.09	PFO4/SS1B	FLAT - ORGANIC	I A 2, II C 2	WETLAND	346	346								0.07		
3	K	5A	541.09	541.23	U	N/A	I A 3, II C 2	UPLAND	758		758							0.14		
3	K	5A	541.23	541.24	PSS1/4B	FLAT - ORGANIC	I A 3, II B 2	WETLAND	35	35								0.01		
3	K	5A	541.24	541.25	U	N/A	I A 3, II C 2	UPLAND	51		51							0.01		
3	K	5A	541.25	541.32	PSS1/4B	FLAT - ORGANIC	I A 3, II B 2	WETLAND	368	368								0.07		
3	K	5A	541.32	541.34	PSS1/EM1B	SLOPE	II C 2, III A 2	WETLAND	124	124								0.02		
3	K	5A	541.34	541.36	PSS1/4B	FLAT - ORGANIC	I A 3, II B 2	WETLAND	117	117								0.02		
3	K	5A	541.36	541.58	U	N/A	I A 3, II C 2	UPLAND	1153		1153							0.22		
3	K	WB-S	541.58	541.59	U	N/A	I A 3, II C 2	UPLAND	59		59									0.01
3	K	5A	541.59	541.67	U	N/A	I A 3, II C 2	UPLAND	428		428							0.08		
3	K	5A	541.67	541.79	PSS1/4B	SLOPE	I A 3, II C 2	WETLAND	591	591								0.11		
3	K	5A	541.79	541.87	PSS1/EM1B	SLOPE	II C 2, III A 2	WETLAND	434	434								0.08		
3	K	5A	541.87	541.91	PSS1/4B	SLOPE	I A 3, II C 2	WETLAND	204	204								0.04		
3	K	5A	541.91	541.92	PSS4/1B	FLAT - ORGANIC	I A 2, II C 2	WETLAND	63	63								0.01		
3	K	5A	541.92	541.94	PSS1B	FLAT - ORGANIC	II B 2, II C 2	WETLAND	88	88								0.02		
3	K	5A	541.94	542.00	U	N/A	I A 3, II C 2	UPLAND	341		341							0.06		
3	K	5A	542.00	542.03	U	N/A	II C 2	UPLAND	149		149							0.03		
3	K	5A	542.03	542.07	U	N/A	I A 3, II C 2	UPLAND	202		202							0.04		
3	K	5A	542.07	542.12	U	N/A	II C 2, II B 2	UPLAND	302		302							0.06		
3	K	5A	542.12	542.16	U	N/A	I A 3, II C 2	UPLAND	197		197							0.04		
3	K	WB-S	542.16	542.17	U	N/A	I A 3, II C 2	UPLAND	60		60									0.01
3	K	5A	542.17	542.24	U	N/A	I A 3, II C 2	UPLAND	341		341							0.06		
3	K	5A	542.24	542.25	PSS4/1B	FLAT - ORGANIC	II A 2, II C 2	WETLAND	68	68								0.01		
3	K	5A	542.25	542.26	U	N/A	I A 3, II C 2	UPLAND	56		56							0.01		
3	K	5A	542.26	542.28	PSS4/1B	FLAT - ORGANIC	II A 2, II C 2	WETLAND	76	76								0.01		
3	K	5A	542.28	542.30	U	N/A	I A 2, II C 2	UPLAND	109		109							0.02		
3	K	5A	542.30	542.31	PSS4/1B	FLAT - ORGANIC	II A 2, II C 2	WETLAND	69	69								0.01		
3	K	5A	542.31	542.34	U	N/A	I A 3, II C 2	UPLAND	183		183							0.03		
3	K	5A	542.34	542.36	U	N/A	II C 2	UPLAND	92		92							0.02		
3	K	5A	542.36	542.45	U	N/A	I A 3, II C 2	UPLAND	449		449							0.08		
3	K	5A	542.45	542.46	PSS1/4C	SLOPE	II C 2, II A 3	WETLAND	58	58								0.01		
3	K	WB-S	542.46	542.46	PSS1/4C	SLOPE	II C 2, II A 3	WETLAND	2	2										0.00
3	K	WB-S	542.46	542.46	PSS1/4C	RIVERINE	II C 2, II A 3	WETLAND	16	16										0.00
3	K	WB-S	542.46	542.47	U	N/A	I A 3, II C 2	UPLAND	41		41									0.01
3	K	5A	542.47	542.61	U	N/A	I A 3, II C 2	UPLAND	725		725							0.14		
3	K	5A	542.61	542.63	PSS1/FO4B	FLAT - ORGANIC	I A 3, II C 2	WETLAND	112	112								0.02		
3	K	5A	542.63	542.65	U	N/A	I A 2, II C 2	UPLAND	108		108							0.02		
3	K	5A	542.65	542.67	PSS1/FO4B	FLAT - ORGANIC	I A 3, II C 2	WETLAND	134	134								0.03		
3	K	5A	542.67	542.68	U	N/A	I A 2, II C 2	UPLAND	28		28							0.01		
3	K	5A	542.68	542.71	PSS1/FO4B	FLAT - ORGANIC	I A 3, II C 2	WETLAND	145	145								0.03		
3	K	5A	542.71	542.72	PEM1F	DEPRESSIONAL	II C 2, III A 2	WETLAND	81	81								0.02		

SPREAD	SECTION	ROW MODE	FROM MP	TO MP	NWI CODE	HGM CLASS	VIERECK	DESCRIPTION	LINEAR FEET	WETLAND FEET	UPLAND FEET	DISTURBED FEET	Comments	Mode 1 - Ice Workpad (miles)	Mode 2 - Frost Pack (miles)	Mode 3 - Timber Mats	Mode 4 - Granular Workpad	Mode 5A - Grade	Mode 5B - Mountain Grade	Stream & Flood Plain Crossings
3	K	5A	542.72	542.73	PSS1/FO4B	FLAT - ORGANIC	I A 3, II C 2	WETLAND	48	48								0.01		
3	K	5A	542.73	542.74	PEM1F	DEPRESSIONAL	II C 2, III A 2	WETLAND	63	63								0.01		
3	K	5A	542.74	542.74	PEM1/SS1C	SLOPE	III A 3, II C 2	WETLAND	2	2								0.00		
3	K	5A	542.74	542.83	PSS1/FO4B	FLAT - ORGANIC	I A 3, II C 2	WETLAND	454	454								0.09		
3	K	5A	542.83	542.89	U	N/A	I A 3, II C 2	UPLAND	348		348							0.07		
3	K	WB-S	542.89	542.90	U	N/A	I A 3, II C 2	UPLAND	34		34									0.01
3	K	WB-S	542.90	542.90	PSS1C	RIVERINE	II B 2, II C 2	WETLAND	16	16										0.00
3	K	WB-S	542.90	542.93	R3UBH	RIVERINE	NONE	WETLAND	156	156										0.03
3	K	WB-S	542.93	542.95	R3USA	RIVERINE	II B 2, II C 2	WETLAND	61	61										0.01
3	K	WB-S	542.95	542.97	U	N/A	I A 2, II C 2	UPLAND	122		122									0.02
3	K	5A	542.97	542.98	U	N/A	I A 2, II C 2	UPLAND	51		51							0.01		
3	K	5A	542.98	543.00	PSS1/4B	FLAT - ORGANIC	II C 2, II A 3	WETLAND	114	114								0.02		
3	K	5A	543.00	543.00	PEM1/SS1B	FLAT - ORGANIC	III A 2, II C 2	WETLAND	6	6								0.00		
3	K	5A	543.00	543.01	PSS1/4B	FLAT - ORGANIC	II C 2, II A 3	WETLAND	30	30								0.01		
3	K	5A	543.01	543.09	U	N/A	I A 2, II C 2	UPLAND	454		454							0.09		
3	L1	5A	543.09	543.09	U	N/A	I A 2, II C 2	UPLAND	3		3							0.00		
3	L1	5A	543.09	543.12	PSS4/1B	FLAT - ORGANIC	II A 2, II C 2	WETLAND	161	161								0.03		
3	L1	5A	543.12	543.21	U	N/A	I A 2, II C 2	UPLAND	469		469							0.09		
3	L1	5A	543.21	543.24	PSS1/EM1B	SLOPE	II C 2, III A 2	WETLAND	131	131								0.02		
3	L1	5A	543.24	543.26	U	N/A	I A 2, II C 2	UPLAND	109		109							0.02		
3	L1	5A	543.26	543.33	PSS1/EM1B	SLOPE	II C 2, III A 2	WETLAND	397	397								0.08		
3	L1	5A	543.33	543.34	PEM1F	DEPRESSIONAL	III A 3	WETLAND	33	33								0.01		
3	L1	5A	543.34	543.41	PSS1/EM1B	SLOPE	II C 2, III A 2	WETLAND	377	377								0.07		
3	L1	5A	543.41	543.42	PSS1/FO4B	SLOPE	I A 3, II C 2	WETLAND	47	47								0.01		
3	L1	5A	543.42	543.50	U	N/A	I A 2, II C 2	UPLAND	408		408							0.08		
3	L1	5A	543.50	543.52	PSS1/FO4B	FLAT - ORGANIC	I A 3, II C 2	WETLAND	133	133								0.03		
3	L1	5A	543.52	543.67	U	N/A	I A 2, II C 2	UPLAND	777		777							0.15		
3	L1	5A	543.67	543.68	U	N/A	II C 1, I A 2	UPLAND	50		50							0.01		
3	L1	5A	543.68	543.72	PSS1/4B	FLAT - ORGANIC	II C 1, II A 2	WETLAND	203	203								0.04		
3	L1	4	543.72	543.72	PSS1/4B	FLAT - ORGANIC	II C 1, II A 2	WETLAND	11	11							0.00			
3	L1	4	543.72	543.73	PSS1B	SLOPE	II C 1	WETLAND	35	35							0.01			
3	L1	4	543.73	543.75	PSS1C	SLOPE	II C 1	WETLAND	111	111							0.02			
3	L1	4	543.75	543.78	PSS1B	SLOPE	II C 1	WETLAND	173	173							0.03			
3	L1	4	543.78	543.96	U	N/A	I A 3, II C 2	UPLAND	958		958						0.18			
3	L1	4	543.96	543.97	PSS1/FO4B	SLOPE	I A 3, II C 2	WETLAND	68	68							0.01			
3	L1	4	543.97	544.00	PSS1/EM1C	DEPRESSIONAL	II C 2, III A 2	WETLAND	146	146							0.03			
3	L1	4	544.00	544.30	U	N/A	I A 2, II C 2	UPLAND	1556		1556						0.29			
3	L1	4	544.30	544.33	PEM1/SS1B	DEPRESSIONAL	III A 2, II C 2	WETLAND	158	158							0.03			
3	L1	4	544.33	544.34	U	N/A	I A 2, II C 2	UPLAND	84		84						0.02			
3	L1	4	544.34	544.40	U	N/A	I A 3, II C 2	UPLAND	284		284						0.05			
3	L1	4	544.40	544.49	PFO4/SS1B	SLOPE	I A 2, II C 2	WETLAND	490	490							0.09			
3	L1	4	544.49	544.49	PSS4/1B	SLOPE	II A 3, II C 2	WETLAND	34	34							0.01			
3	L1	4	544.49	544.51	PSS1/EM1B	SLOPE	II C 2, III A 2	WETLAND	70	70							0.01			
3	L1	4	544.51	544.52	PSS4/1B	SLOPE	II A 3, II C 2	WETLAND	43	43							0.01			
3	L1	4	544.52	544.54	U	N/A	I A 2, II B 2	UPLAND	144		144						0.03			
3	L1	4	544.54	544.61	PFO4/SS1B	SLOPE	I A 2, II C 2	WETLAND	376	376							0.07			
3	L1	4	544.61	544.72	PFO4/SS4B	FLAT - ORGANIC	I A 2, II C 2	WETLAND	581	581							0.11			
3	L1	4	544.72	545.35	U	N/A	I A 2, II B 2	UPLAND	3297		3297						0.62			
3	L1	4	545.35	545.43	PSS1/EM1B	FLAT - ORGANIC	I A 2, II B 2	WETLAND	428	428							0.08			
3	L1	4	545.43	545.55	U	N/A	I A 2, II B 2	UPLAND	632		632						0.12			
3	L1	4	545.55	545.56	PSS1/EM1B	SLOPE	II C 2, III A 2	WETLAND	66	66							0.01			
3	L1	4	545.56	545.74	U	N/A	I A 2, II B 2	UPLAND	925		925						0.18			
3	L1	4	545.74	545.76	PSS4/1B	FLAT - ORGANIC	I A 2, II C 2	WETLAND	105	105							0.02			
3	L1	4	545.76	545.82	U	N/A	I A 2, II B 2	UPLAND	334		334						0.06			
3	L1	4	545.82	545.88	PSS1/EM1B	SLOPE	II C 2, III A 2	WETLAND	300	300							0.06			
3	L1	4	545.88	545.95	U	N/A	I A 2, II B 2	UPLAND	389		389						0.07			
3	L1	4	545.95	545.96	PSS4/1B	FLAT - ORGANIC	I A 2, II C 2	WETLAND	68	68							0.01			
3	L1	4	545.96	545.97	PEM1E	DEPRESSIONAL	III A 3	WETLAND	14	14							0.00			
3	L1	4	545.97	546.00	PSS4/1B	FLAT - ORGANIC	I A 2, II C 2	WETLAND	156	156							0.03			
3	L1	4	546.00	546.03	U	N/A	I A 2, II B 2	UPLAND	188		188						0.04			
3	L1	4	546.03	546.11	PSS4/1B	FLAT - ORGANIC	I A 2, II C 2	WETLAND	418	418							0.08			
3	L1	4	546.11	546.31	U	N/A	I A 2, II B 2	UPLAND	1037		1037						0.20			
3	L1	4	546.31	546.32	PSS4/1B	SLOPE	I A 2, II C 2	WETLAND	82	82							0.02			
3	L1	4	546.32	546.70	U	N/A	I A 2, II B 2	UPLAND	2009		2009						0.38			
3	L1	4	546.70	546.71	PSS1/4B	FLAT - ORGANIC	II C 2, I A 3	WETLAND	40	40							0.01			
3	L1	4	546.71	546.76	U	N/A	I A 2, II B 2	UPLAND	257		257						0.05			
3	L1	4	546.76	546.76	PSS1B	FLAT - ORGANIC	II C 1	WETLAND	26	26							0.00			
3	L1	4	546.76	546.77	PEM1B	DEPRESSIONAL	III A 3	WETLAND	48	48							0.01			
3	L1	4	546.77	546.81	PSS1B	FLAT - ORGANIC	II C 1	WETLAND	182	182							0.03			
3	L1	4	546.81	547.03	U	N/A	I A 2, II B 2	UPLAND	1180		1180						0.22			
3	L1	4	547.03	547.05	PSS1/4B	FLAT - ORGANIC	II C 2, I A 3	WETLAND	105	105							0.02			
3	L1	4	547.05	547.09	PSS1B	FLAT - ORGANIC	II C 2	WETLAND	214	214							0.04			

SPREAD	SECTION	ROW MODE	FROM MP	TO MP	NWI CODE	HGM CLASS	VIERECK	DESCRIPTION	LINEAR FEET	WETLAND FEET	UPLAND FEET	DISTURBED FEET	Comments	Mode 1 - Ice Workpad (miles)	Mode 2 - Frost Pack (miles)	Mode 3 - Timber Mats	Mode 4 - Granular Workpad	Mode 5A - Grade	Mode 5B - Mountain Grade	Stream & Flood Plain Crossings
3	L1	4	547.09	547.13	PSS1/4B	FLAT - ORGANIC	II C 2, I A 3	WETLAND	226	226							0.04			
3	L1	4	547.13	547.19	U	N/A	I A 2, II B 2	UPLAND	277		277						0.05			
3	L1	4	547.19	547.23	PSS1/4B	FLAT - ORGANIC	II C 2, II A 3	WETLAND	237	237							0.04			
3	L1	4	547.23	547.25	PSS1B	FLAT - ORGANIC	II C 2	WETLAND	96	96							0.02			
3	L1	4	547.25	547.26	PSS1/4B	SLOPE	II C 2, II A 3	WETLAND	63	63							0.01			
3	L1	4	547.26	547.28	PEM1B	DEPRESSIONAL	III A 2	WETLAND	78	78							0.01			
3	L1	4	547.28	547.31	PSS1/4B	SLOPE	II C 2, II A 3	WETLAND	192	192							0.04			
3	L1	4	547.31	547.35	U	N/A	I A 2, II B 2	UPLAND	181		181						0.03			
3	L1	4	547.35	547.37	PSS1/4B	SLOPE	II C 2, II A 3	WETLAND	118	118							0.02			
3	L1	4	547.37	547.47	PSS1/4B	FLAT - ORGANIC	II C 2, II A 3	WETLAND	529	529							0.10			
3	L1	4	547.47	547.48	PSS1/EM1B	FLAT - ORGANIC	II C 2, III A 2	WETLAND	57	57							0.01			
3	L1	4	547.48	547.67	PSS1/4B	FLAT - ORGANIC	II C 2, II A 3	WETLAND	1012	1012							0.19			
3	L1	4	547.67	547.69	PSS1/EM1C	SLOPE	II C 2, III A 2	WETLAND	76	76							0.01			
3	L1	4	547.69	547.91	PFO4/SS4B	SLOPE	I A 2, II C 2	WETLAND	1164	1164							0.22			
3	L1	5A	547.91	547.97	PFO4/SS4B	SLOPE	I A 2, II C 2	WETLAND	347	347								0.07		
3	L1	5A	547.97	547.98	PSS1/EM1B	SLOPE	II C 2, III A 2	WETLAND	33	33								0.01		
3	L1	5A	547.98	548.03	PSS1/4B	DEPRESSIONAL	I A 3, II C 2	WETLAND	252	252								0.05		
3	L1	5A	548.03	548.09	PFO4/SS4B	SLOPE	II A 2, I A 2	WETLAND	313	313								0.06		
3	L1	5A	548.09	548.10	PSS4/1B	SLOPE	I A 2, II C 2	WETLAND	55	55								0.01		
3	L1	5A	548.10	548.13	PFO4/SS4B	FLAT - ORGANIC	II A 2, I A 2	WETLAND	156	156								0.03		
3	L1	5A	548.13	548.15	PSS4/1B	SLOPE	I A 2, II C 2	WETLAND	148	148								0.03		
3	L1	5A	548.15	548.24	PFO4/SS4B	SLOPE	II A 2, I A 2	WETLAND	460	460								0.09		
3	L1	5A	548.24	548.24	PEM1/SS1C	DEPRESSIONAL	III A 2, II C 2	WETLAND	7	7								0.00		
3	L1	5A	548.24	548.24	PFO4/SS4B	FLAT - ORGANIC	II A 2, I A 2	WETLAND	11	11								0.00		
3	L1	5A	548.24	548.27	PEM1/SS1C	DEPRESSIONAL	III A 2, II C 2	WETLAND	141	141								0.03		
3	L1	5A	548.27	548.53	PFO4/SS4B	FLAT - ORGANIC	II A 2, I A 2	WETLAND	1372	1372								0.26		
3	L1	5A	548.53	548.55	PEM1/SS1B	DEPRESSIONAL	III A 2, II C 2	WETLAND	73	73								0.01		
3	L1	5A	548.55	548.56	PFO4/SS4B	FLAT - ORGANIC	II A 2, I A 2	WETLAND	56	56								0.01		
3	L1	5A	548.56	548.60	PEM1/SS1B	DEPRESSIONAL	III A 2, II C 2	WETLAND	206	206								0.04		
3	L1	5A	548.60	548.70	PFO4/SS4B	FLAT - ORGANIC	I A 2, II C 1	WETLAND	548	548								0.10		
3	L1	5A	548.70	548.72	PFO4/SS4B	SLOPE	I A 2, II C 1	WETLAND	104	104								0.02		
3	L1	5A	548.72	548.79	PFO4/SS4B	FLAT - ORGANIC	I A 2, II C 1	WETLAND	398	398								0.08		
3	L1	5A	548.79	548.81	PFO4/SS4B	SLOPE	I A 2, II C 1	WETLAND	69	69								0.01		
3	L1	5A	548.81	548.84	PFO4/SS4B	FLAT - ORGANIC	I A 2, II C 1	WETLAND	196	196								0.04		
3	L1	5A	548.84	548.86	U	N/A	I A 2, II B 2	UPLAND	100		100							0.02		
3	L1	5A	548.86	548.93	PFO4/SS4B	FLAT - ORGANIC	I A 2, II C 1	WETLAND	343	343								0.06		
3	L1	5A	548.93	548.93	PSS4/1B	SLOPE	I A 2, II C 1	WETLAND	31	31								0.01		
3	L1	5A	548.93	548.94	PFO4/SS4B	FLAT - ORGANIC	I A 2, II C 1	WETLAND	51	51								0.01		
3	L1	5A	548.94	548.95	U	N/A	I A 2, II B 2	UPLAND	50		50							0.01		
3	L1	5A	548.95	548.96	PFO4/SS4B	SLOPE	I A 2, II C 1	WETLAND	22	22								0.00		
3	L1	5A	548.96	549.04	U	N/A	I A 2, II B 2	UPLAND	425		425							0.08		
3	L1	5A	549.04	549.04	PFO4/SS4B	SLOPE	I A 2, II C 1	WETLAND	16	16								0.00		
3	L1	5A	549.04	549.08	PFO4/SS4B	FLAT - ORGANIC	I A 2, II C 1	WETLAND	198	198								0.04		
3	L1	5A	549.08	549.09	PFO4/SS4B	SLOPE	I A 2, II C 1	WETLAND	57	57								0.01		
3	L1	5A	549.09	549.17	PFO4/SS4B	FLAT - ORGANIC	I A 2, II C 1	WETLAND	417	417								0.08		
3	L1	5A	549.17	549.18	U	N/A	I A 2, II B 2	UPLAND	80		80							0.02		
3	L1	5A	549.18	549.19	PFO4/SS4B	SLOPE	I A 2, II C 1	WETLAND	56	56								0.01		
3	L1	5A	549.19	549.23	PFO4/SS4B	SLOPE	I A 2, II C 1	WETLAND	211	211								0.04		
3	L1	5A	549.23	549.25	PFO4/SS4B	SLOPE	I A 2, II C 1	WETLAND	112	112								0.02		
3	L1	5A	549.25	549.33	U	N/A	I A 2, II C 2	UPLAND	384		384							0.07		
3	L1	5A	549.33	549.62	U	N/A	I A 2, II C 2	UPLAND	1530		1530							0.29		
3	L1	5A	549.62	549.62	PEM1B	DEPRESSIONAL	III A 2	WETLAND	29	29								0.01		
3	L1	5A	549.62	549.64	U	N/A	I A 2, II C 2	UPLAND	98		98							0.02		
3	L1	5A	549.64	549.67	PEM1B	DEPRESSIONAL	III A 2	WETLAND	144	144								0.03		
3	L1	5A	549.67	549.77	U	N/A	I A 2, II C 2	UPLAND	552		552							0.10		
3	L1	5A	549.77	549.82	U	N/A	I A 2, II B 2	UPLAND	260		260							0.05		
3	L1	5A	549.82	549.90	U	N/A	I A 2, II C 2	UPLAND	418		418							0.08		
3	L1	5A	549.90	549.93	PSS1/4B	FLAT - ORGANIC	I A 3, II C 2	WETLAND	171	171								0.03		
3	L1	5A	549.93	549.96	U	N/A	I A 2, II C 2	UPLAND	156		156							0.03		
3	L1	5A	549.96	550.01	PSS1/4B	FLAT - ORGANIC	I A 3, II C 2	WETLAND	241	241								0.05		
3	L1	5A	550.01	550.37	U	N/A	I A 2, II C 2	UPLAND	1879		1879							0.36		
3	L1	5A	550.37	550.38	PEM1C	DEPRESSIONAL	III A 2	WETLAND	66	66								0.01		
3	L1	5A	550.38	550.63	U	N/A	I A 2, II C 2	UPLAND	1324		1324							0.25		
3	L1	5A	550.63	550.66	U	N/A	I A 3, II C 2	UPLAND	185		185							0.04		
3	L1	5A	550.66	550.71	PFO4/SS1B	SLOPE	I A 2, II C 2	WETLAND	250	250								0.05		
3	L1	5A	550.71	550.74	PSS1B	SLOPE	II C 2, II B 2	WETLAND	181	181								0.03		
3	L1	5A	550.74	550.75	U	N/A	I A 3, II C 2	UPLAND	43		43							0.01		
3	L1	5A	550.75	550.84	PSS4/FO4B	SLOPE	I A 2, II C 2	WETLAND	468	468								0.09		
3	L1	5A	550.84	550.88	PSS1B	SLOPE	II C 2, II B 2	WETLAND	204	204								0.04		
3	L1	5A	550.88	550.91	PSS4/FO4B	SLOPE	I A 2, II C 2	WETLAND	143	143								0.03		
3	L1	5A	550.91	550.91	PSS1B	SLOPE	II C 2, II B 2	WETLAND	34	34								0.01		
3	L1	5A	550.91	551.05	PSS4/FO4B	SLOPE	I A 2, II C 2	WETLAND	708	708								0.13		

SPREAD	SECTION	ROW MODE	FROM MP	TO MP	NWI CODE	HGM CLASS	VIERECK	DESCRIPTION	LINEAR FEET	WETLAND FEET	UPLAND FEET	DISTURBED FEET	Comments	Mode 1 - Ice Workpad (miles)	Mode 2 - Frost Pack (miles)	Mode 3 - Timber Mats	Mode 4 - Granular Workpad	Mode 5A - Grade	Mode 5B - Mountain Grade	Stream & Flood Plain Crossings
3	L1	5A	551.05	551.09	PFO4/SS1B	SLOPE	I A 2, II C 2	WETLAND	225	225								0.04		
3	L1	5A	551.09	551.14	U	N/A	I A 2, II C 2	UPLAND	276		276							0.05		
3	L1	5A	551.14	551.17	PFO4/SS1B	SLOPE	I A 2, II C 2	WETLAND	162	162								0.03		
3	L1	5A	551.17	551.18	U	N/A	I A 2, II C 2	UPLAND	29		29							0.01		
3	L1	5A	551.18	551.21	U	N/A	I A 2, II C 2	UPLAND	146		146							0.03		
3	L1	5A	551.21	551.22	U	N/A	I A 2, II C 2	UPLAND	56		56							0.01		
3	L1	5A	551.22	551.27	PSS4/1B	SLOPE	I A 3, II C 2	WETLAND	273	273								0.05		
3	L1	5A	551.27	551.41	U	N/A	I A 2, II C 2	UPLAND	751		751							0.14		
3	L1	WB-S	551.41	551.42	U	N/A	I A 2, II C 2	UPLAND	31		31									0.01
3	L1	WB-S	551.42	551.43	R3UB1H	RIVERINE	NONE	WETLAND	45	45										0.01
3	L1	WB-S	551.43	551.43	U	N/A	I A 2, II C 2	UPLAND	15		15									0.00
3	L1	5A	551.43	551.69	U	N/A	I A 2, II C 2	UPLAND	1358		1358							0.26		
3	L1	5A	551.69	551.69	PSS1/EM1B	SLOPE	II C 2	WETLAND	26	26								0.00		
3	L1	5A	551.69	551.71	PSS4B	SLOPE	I A 2, II C 2	WETLAND	98	98								0.02		
3	L1	5A	551.71	551.71	U	N/A	I A 2, II C 2	UPLAND	27		27							0.01		
3	L1	5A	551.71	551.74	PSS4B	SLOPE	I A 2, II C 2	WETLAND	124	124								0.02		
3	L1	5A	551.74	551.83	U	N/A	I A 2, II C 2	UPLAND	505		505							0.10		
3	L1	5A	551.83	551.87	PSS1/EM1B	SLOPE	II C 2, III A 2	WETLAND	211	211								0.04		
3	L1	5A	551.87	551.91	PFO4/SS1B	SLOPE	I A 2, II C 2	WETLAND	179	179								0.03		
3	L1	5A	551.91	551.99	U	N/A	I A 2, II C 2	UPLAND	443		443							0.08		
3	L1	5A	551.99	552.00	PSS1/FO4B	SLOPE	II C 2, I A 3	WETLAND	34	34								0.01		
3	L1	5A	552.00	552.03	U	N/A	I A 2, II C 2	UPLAND	188		188							0.04		
3	L1	5A	552.03	552.05	PSS1/FO4B	SLOPE	II C 2, I A 3	WETLAND	114	114								0.02		
3	L1	5A	552.05	552.08	U	N/A	I A 2, II C 2	UPLAND	136		136							0.03		
3	L1	5A	552.08	552.08	PSS1B	SLOPE	II B 1	WETLAND	26	26								0.00		
3	L1	5A	552.08	552.16	PSS1/FO4B	SLOPE	II C 2, I A 3	WETLAND	408	408								0.08		
3	L1	5A	552.16	552.19	U	N/A	I C 2, II C 2	UPLAND	124		124							0.02		
3	L1	5A	552.19	552.22	PSS1/FO4B	FLAT - ORGANIC	II C 2, I A 3	WETLAND	182	182								0.03		
3	L1	5A	552.22	552.27	U	N/A	I A 2, II C 2	UPLAND	245		245							0.05		
3	L1	5A	552.27	552.43	PSS1/FO4B	FLAT - ORGANIC	II C 2, I A 3	WETLAND	847	847								0.16		
3	L1	5A	552.43	552.49	U	N/A	I A 2, II C 2	UPLAND	337		337							0.06		
3	L1	5A	552.49	552.57	PSS1/FO4B	FLAT - ORGANIC	II C 2, I A 3	WETLAND	424	424								0.08		
3	L1	5A	552.57	552.90	U	N/A	I A 2, II C 2	UPLAND	1739		1739							0.33		
3	L1	5A	552.90	552.99	PEM1/SS1C	DEPRESSIONAL	III A 3, II C 2	WETLAND	474	474								0.09		
3	L1	WB-S	552.99	553.01	PEM1/SS1C	DEPRESSIONAL	III A 3, II C 2	WETLAND	120	120										0.02
3	L1	5A	553.01	553.03	PEM1/SS1C	DEPRESSIONAL	III A 3, II C 2	WETLAND	93	93								0.02		
3	L1	5A	553.03	553.18	U	N/A	I A 2, II C 2	UPLAND	790		790							0.15		
3	L1	5A	553.18	553.19	PSS1/EM1Fb	DEPRESSIONAL	II C 2, III A 3	WETLAND	28	28								0.01		
3	L1	5A	553.19	553.31	U	N/A	I A 2, II C 2	UPLAND	668		668							0.13		
3	L1	5A	553.31	553.32	PSS1/EM1Fb	DEPRESSIONAL	II C 2, III A 3	WETLAND	17	17								0.00		
3	L1	5A	553.32	553.32	U	N/A	I A 2, II C 2	UPLAND	32		32							0.01		
3	L1	5A	553.32	553.33	PSS1/EM1Fb	DEPRESSIONAL	II C 2, III A 3	WETLAND	51	51								0.01		
3	L1	5A	553.33	553.34	U	N/A	I A 2, II C 2	UPLAND	48		48							0.01		
3	L1	5A	553.34	553.35	PSS1/EM1Fb	DEPRESSIONAL	II C 2, III A 3	WETLAND	69	69								0.01		
3	L1	5A	553.35	553.37	U	N/A	I A 2, II C 2	UPLAND	112		112							0.02		
3	L1	5A	553.37	553.39	PSS1/EM1Fb	DEPRESSIONAL	II C 2, III A 3	WETLAND	99	99								0.02		
3	L1	5A	553.39	553.49	U	N/A	I A 2, II C 2	UPLAND	520		520							0.10		
3	L1	5A	553.49	553.50	PFO4/SS1B	SLOPE	I A 2, II B 2	WETLAND	63	63								0.01		
3	L1	5A	553.50	553.66	U	N/A	I A 2, II C 2	UPLAND	816		816							0.15		
3	L1	5A	553.66	553.69	PFO4/SS1B	SLOPE	I A 2, II B 2	WETLAND	170	170								0.03		
3	L1	5A	553.69	553.71	U	N/A	I A 2, II C 2	UPLAND	96		96							0.02		
3	L1	5A	553.71	553.74	PFO4/SS4B	FLAT - ORGANIC	I A 2, II B 2	WETLAND	160	160								0.03		
3	L1	5A	553.74	553.76	U	N/A	I A 2, II C 2	UPLAND	124		124							0.02		
3	L1	5A	553.76	553.82	PFO4/SS4B	FLAT - ORGANIC	I A 2, II B 2	WETLAND	309	309								0.06		
3	L1	5A	553.82	553.85	U	N/A	I A 2, II B 2	UPLAND	180		180							0.03		
3	L1	5A	553.85	553.88	PFO4/SS4B	FLAT - ORGANIC	I A 2, II B 2	WETLAND	127	127								0.02		
3	L1	5A	553.88	553.90	U	N/A	I A 2, II B 2	UPLAND	111		111							0.02		
3	L1	5A	553.90	553.92	PFO4/SS4B	FLAT - ORGANIC	I A 2, II B 2	WETLAND	119	119								0.02		
3	L1	5A	553.92	553.97	U	N/A	I C 2, II C 2	UPLAND	256		256							0.05		
3	L1	5A	553.97	554.00	PFO4/SS4B	FLAT - ORGANIC	I A 2, II B 2	WETLAND	141	141								0.03		
3	L1	5A	554.00	554.05	U	N/A	I C 2, II C 2	UPLAND	252		252							0.05		
3	L1	5A	554.05	554.06	PFO4/SS4B	FLAT - ORGANIC	I A 2, II B 2	WETLAND	88	88								0.02		
3	L1	5A	554.06	554.06	U	N/A	I C 2, II C 2	UPLAND	11		11							0.00		
3	L1	5A	554.06	554.18	PFO4/SS4B	FLAT - ORGANIC	I A 2, II B 2	WETLAND	624	624								0.12		
3	L1	5A	554.18	554.26	U	N/A	I C 2, II C 2	UPLAND	392		392							0.07		
3	L1	5A	554.26	554.34	PFO4/SS4B	FLAT - ORGANIC	I A 2, II B 2	WETLAND	444	444								0.08		
3	L1	5A	554.34	554.40	U	N/A	I A 2, II C 2	UPLAND	292		292							0.06		
3	L1	5A	554.40	554.40	PFO4/SS4B	FLAT - ORGANIC	I A 2, II B 2	WETLAND	43	43								0.01		
3	L1	5A	554.40	554.46	U	N/A	I A 2, II C 2	UPLAND	270		270							0.05		
3	L1	5A	554.46	554.47	PFO4/SS4B	FLAT - ORGANIC	I A 2, II B 2	WETLAND	73	73								0.01		
3	L1	5A	554.47	554.74	U	N/A	I A 2, II C 2	UPLAND	1434		1434							0.27		
3	L1	5A	554.74	554.76	U	N/A	I A 2, II C 2	UPLAND	127		127							0.02		

SPREAD	SECTION	ROW MODE	FROM MP	TO MP	NWI CODE	HGM CLASS	VIERECK	DESCRIPTION	LINEAR FEET	WETLAND FEET	UPLAND FEET	DISTURBED FEET	Comments	Mode 1 - Ice Workpad (miles)	Mode 2 - Frost Pack (miles)	Mode 3 - Timber Mats	Mode 4 - Granular Workpad	Mode 5A - Grade	Mode 5B - Mountain Grade	Stream & Flood Plain Crossings
3	L1	5A	554.76	554.81	U	N/A	I A 2, II C 2	UPLAND	243		243							0.05		
3	L1	5A	554.81	554.83	U	N/A	I A 3, II C 2	UPLAND	77		77							0.01		
3	L1	5A	554.83	554.88	U	N/A	I A 2, II C 2	UPLAND	266		266							0.05		
3	L1	5A	554.88	554.89	U	N/A	I A 3, II C 2	UPLAND	78		78							0.01		
3	L1	5A	554.89	554.90	U	N/A	II B 1	UPLAND	39		39							0.01		
3	L1	5A	554.90	554.92	U	N/A	I A 3, II C 2	UPLAND	136		136							0.03		
3	L1	5A	554.92	554.99	U	N/A	II B 1	UPLAND	335		335							0.06		
3	L1	5A	554.99	555.15	U	N/A	I A 2, II C 2	UPLAND	858		858							0.16		
3	L1	5A	555.15	555.16	PSS1/4B	SLOPE	II C 2, I A 3	WETLAND	70	70								0.01		
3	L1	5A	555.16	555.43	U	N/A	I A 2, II C 2	UPLAND	1386		1386							0.26		
3	L1	5A	555.43	555.62	U	N/A	I A 2, II C 1	UPLAND	1003		1003							0.19		
3	L1	5A	555.62	555.63	U	N/A	I A 2, II B 2	UPLAND	63		63							0.01		
3	L1	5A	555.63	555.69	PSS1C	SLOPE	II B 1	WETLAND	358	358								0.07		
3	L1	5A	555.69	555.81	U	N/A	I A 2, II B 2	UPLAND	584		584							0.11		
3	L1	5A	555.81	555.81	PSS1B	SLOPE	II B 1	WETLAND	15	15								0.00		
3	L1	5A	555.81	555.85	U	N/A	I A 2, II B 2	UPLAND	221		221							0.04		
3	L1	5A	555.85	556.08	PFO4/SS1B	SLOPE	I A 3, II C 2	WETLAND	1230	1230								0.23		
3	L1	5A	556.08	556.18	U	N/A	I A 2, II B 2	UPLAND	526		526							0.10		
3	L1	5A	556.18	556.19	PFO4/SS1B	SLOPE	I A 3, II C 2	WETLAND	39	39								0.01		
3	L1	5A	556.19	556.25	U	N/A	I A 2, II B 2	UPLAND	294		294							0.06		
3	L1	5A	556.25	556.31	PFO4/SS1B	SLOPE	I A 3, II C 2	WETLAND	346	346								0.07		
3	L1	5A	556.31	556.32	U	N/A	I A 2, II B 2	UPLAND	42		42							0.01		
3	L1	WB-S	556.32	556.33	U	N/A	I A 2, II B 2	UPLAND	61		61									0.01
3	L1	5A	556.33	556.47	U	N/A	I A 2, II B 2	UPLAND	741		741							0.14		
3	L1	5A	556.47	556.49	PSS1B	SLOPE	II B 2	WETLAND	96	96								0.02		
3	L1	5A	556.49	556.50	U	N/A	I A 2, II B 2	UPLAND	75		75							0.01		
3	L1	5A	556.50	556.51	PFO4/SS1B	SLOPE	I A 2, II B 2	WETLAND	24	24								0.00		
3	L1	5A	556.51	556.52	U	N/A	I A 2, II B 2	UPLAND	49		49							0.01		
3	L1	5A	556.52	556.52	D	N/A	NONE	DISTURBED	9			9						0.00		
3	L1	5A	556.52	556.53	PSS4/1B	SLOPE	I A 2, II C 2	WETLAND	83	83								0.02		
3	L1	5A	556.53	556.57	PFO4/SS1B	SLOPE	I A 2, II B 2	WETLAND	193	193								0.04		
3	L1	5A	556.57	556.61	U	N/A	I A 2, II B 2	UPLAND	205		205							0.04		
3	L1	5A	556.61	556.63	U	N/A	II B 1, II C 2	UPLAND	101		101							0.02		
3	L1	5A	556.63	556.70	U	N/A	I A 2, II B 2	UPLAND	370		370							0.07		
3	L1	5A	556.70	556.76	U	N/A	II B 1, II C 2	UPLAND	300		300							0.06		
3	L1	5A	556.76	556.80	U	N/A	I A 2, II B 2	UPLAND	230		230							0.04		
3	L1	5A	556.80	556.82	U	N/A	II B 1, II C 2	UPLAND	115		115							0.02		
3	L1	5A	556.82	556.86	U	N/A	I A 2, II B 2	UPLAND	178		178							0.03		
3	L1	5A	556.86	556.87	U	N/A	II B 1, II C 2	UPLAND	75		75							0.01		
3	L1	5A	556.87	556.89	U	N/A	I A 2, II B 2	UPLAND	128		128							0.02		
3	L1	5A	556.89	556.95	U	N/A	II B 1, II C 2	UPLAND	293		293							0.06		
3	L1	5A	556.95	557.01	U	N/A	I A 3, II B 2	UPLAND	305		305							0.06		
3	L1	5A	557.01	557.03	U	N/A	II B 1, II C 2	UPLAND	113		113							0.02		
3	L1	5A	557.03	557.35	U	N/A	I C 3, II B 2	UPLAND	1710		1710							0.32		
3	L1	5A	557.35	557.52	U	N/A	II B 1, II C 2	UPLAND	859		859							0.16		
3	L1	5A	557.52	557.67	U	N/A	I A 3, II B 1	UPLAND	843		843							0.16		
3	L1	5A	557.67	558.07	U	N/A	II B 1, II C 2	UPLAND	2091		2091							0.40		
3	L1	5A	558.07	558.13	U	N/A	I A 3, II B 2	UPLAND	303		303							0.06		
3	L1	5A	558.13	558.20	U	N/A	II B 1, II C 2	UPLAND	361		361							0.07		
3	L1	5A	558.20	558.29	U	N/A	I A 3, II B 2	UPLAND	513		513							0.10		
3	L1	5A	558.29	558.30	U	N/A	II B 1, II C 2	UPLAND	43		43							0.01		
3	L1	WB-S	558.30	558.31	U	N/A	II B 1, II C 2	UPLAND	60		60									0.01
3	L1	5A	558.31	558.46	U	N/A	II B 1, II C 2	UPLAND	776		776							0.15		
3	L1	5A	558.46	558.50	U	N/A	I A 3, II B 2	UPLAND	220		220							0.04		
3	L1	5A	558.50	558.58	U	N/A	II B 1, II C 2	UPLAND	424		424							0.08		
3	L1	5A	558.58	558.65	U	N/A	I A 3, II B 2	UPLAND	371		371							0.07		
3	L1	5A	558.65	558.66	U	N/A	II B 1, II C 2	UPLAND	58		58							0.01		
3	L1	5A	558.66	558.69	U	N/A	I A 3, II B 2	UPLAND	146		146							0.03		
3	L1	5A	558.69	558.80	U	N/A	II B 1, II C 2	UPLAND	582		582							0.11		
3	L1	5A	558.80	558.87	U	N/A	I A 3, II B 2	UPLAND	365		365							0.07		
3	L1	5A	558.87	558.89	U	N/A	II B 1, II C 2	UPLAND	94		94							0.02		
3	L1	5A	558.89	558.99	U	N/A	NONE	UPLAND	560		560							0.11		
3	L1	5A	558.99	559.01	D	N/A	NONE	DISTURBED	71			71						0.01		
3	L1	5A	559.01	559.03	U	N/A	I A 3, II B 2	UPLAND	116		116							0.02		
3	L1	5A	559.03	559.04	PUBHx	DEPRESSIONAL	NONE	WETLAND	65	65								0.01		
3	L1	5A	559.04	559.20	U	N/A	I A 3, II B 2	UPLAND	826		826							0.16		
3	L1	5A	559.20	559.29	U	N/A	NONE	UPLAND	504		504							0.10		
3	L1	5A	559.29	559.31	D	N/A	NONE	DISTURBED	75			75						0.01		
3	L1	5A	559.31	559.32	U	N/A	NONE	UPLAND	61		61							0.01		
3	L1	5A	559.32	559.38	U	N/A	I A 3, II B 2	UPLAND	334		334							0.06		
3	L1	5A	559.38	559.39	PFO4B	SLOPE	I A 2, II C 2	WETLAND	40	40								0.01		
3	L1	5A	559.39	559.40	PSS1/EM1B	SLOPE	II C 1, III A 2	WETLAND	59	59								0.01		

SPREAD	SECTION	ROW MODE	FROM MP	TO MP	NWI CODE	HGM CLASS	VIERECK	DESCRIPTION	LINEAR FEET	WETLAND FEET	UPLAND FEET	DISTURBED FEET	Comments	Mode 1 - Ice Workpad (miles)	Mode 2 - Frost Pack (miles)	Mode 3 - Timber Mats	Mode 4 - Granular Workpad	Mode 5A - Grade	Mode 5B - Mountain Grade	Stream & Flood Plain Crossings
3	L1	5A	559.40	559.42	PSS1B	SLOPE	II C 1	WETLAND	88	88								0.02		
3	L1	5A	559.42	559.45	PSS4/1B	SLOPE	II A 3, II C 2	WETLAND	149	149								0.03		
3	L1	5A	559.45	559.57	PSS1/EM1B	SLOPE	II C 2, III A 2	WETLAND	658	658								0.12		
3	L1	5A	559.57	559.58	U	N/A	I A 3, II B 2	UPLAND	49		49							0.01		
3	L1	WB-S	559.58	559.59	U	N/A	I A 3, II B 2	UPLAND	60		60									0.01
3	L1	5A	559.59	559.60	U	N/A	I A 3, II B 2	UPLAND	47		47							0.01		
3	L1	5A	559.60	559.60	PSS1/EM1B	SLOPE	II C 2, III A 2	WETLAND	21	21								0.00		
3	L1	5A	559.60	559.61	U	N/A	I A 3, II B 2	UPLAND	13		13							0.00		
3	L1	5A	559.61	559.78	PSS1/EM1B	FLAT - ORGANIC	II C 2, III A 2	WETLAND	932	932								0.18		
3	L1	5A	559.78	559.79	D	N/A	NONE	DISTURBED	34			34						0.01		
3	L1	5A	559.79	559.84	PSS1/EM1B	FLAT - ORGANIC	II C 2, III A 2	WETLAND	243	243								0.05		
3	L1	5A	559.84	560.00	U	N/A	I A 2, II C 2	UPLAND	875		875							0.17		
3	L1	5A	560.00	560.06	U	N/A	I A 2, II C 2	UPLAND	288		288							0.05		
3	L1	5A	560.06	560.16	U	N/A	I A 2, II C 2	UPLAND	535		535							0.10		
3	L1	5A	560.16	560.16	PSS1/EM1B	SLOPE	II C 2, III A 2	WETLAND	20	20								0.00		
3	L1	5A	560.16	560.28	PSS1/FO4B	FLAT - ORGANIC	I A 3, II C 1	WETLAND	613	613								0.12		
3	L1	5A	560.28	560.29	PSS1/FO4B	SLOPE	II B 2, I A 3	WETLAND	43	43								0.01		
3	L1	5A	560.29	560.33	U	N/A	I A 2, II B 2	UPLAND	239		239							0.05		
3	L1	5A	560.33	560.33	PSS1/FO4B	SLOPE	II B 2, I A 3	WETLAND	21	21								0.00		
3	L1	5A	560.33	560.35	U	N/A	II B 2	UPLAND	107		107							0.02		
3	L1	5A	560.35	560.40	PSS1/FO4B	FLAT - ORGANIC	I A 3, II C 1	WETLAND	261	261								0.05		
3	L1	5A	560.40	560.44	PSS1/EM1B	FLAT - ORGANIC	II C 2, III A 2	WETLAND	186	186								0.04		
3	L1	5A	560.44	560.45	PSS1/FO4B	FLAT - ORGANIC	I A 3, II C 1	WETLAND	79	79								0.02		
3	L1	5A	560.45	560.53	PSS1/EM1B	FLAT - ORGANIC	II C 2, III A 2	WETLAND	413	413								0.08		
3	L1	5A	560.53	560.56	U	N/A	I A 3, II B 2	UPLAND	124		124							0.02		
3	L1	5A	560.56	560.56	PSS1/EM1C	DEPRESSIONAL	II C 2, III A 3	WETLAND	36	36								0.01		
3	L1	5A	560.56	560.58	U	N/A	I A 2	UPLAND	68		68							0.01		
3	L1	5A	560.58	560.59	PSS1/EM1C	DEPRESSIONAL	II C 2, III A 3	WETLAND	92	92								0.02		
3	L1	5A	560.59	560.65	U	N/A	I A 2	UPLAND	320		320							0.06		
3	L1	WB-S	560.65	560.66	U	N/A	I A 2	UPLAND	41		41									0.01
3	L1	WB-S	560.66	560.66	PSS1/EM1C	RIVERINE	II C 2, III A 2	WETLAND	13	13										0.00
3	L1	WB-S	560.66	560.67	R4SB	RIVERINE	NONE	WETLAND	46	46										0.01
3	L1	WB-S	560.67	560.68	PSS1/EM1C	RIVERINE	II C 2, III A 2	WETLAND	27	27										0.01
3	L1	WB-S	560.68	560.68	PSS1/EM1C	RIVERINE	II B 2, III A 2	WETLAND	32	32										0.01
3	L1	WB-S	560.68	560.69	U	N/A	I A 2	UPLAND	20		20									0.00
3	L1	5A	560.69	560.83	U	N/A	I A 2	UPLAND	750		750							0.14		
3	L1	5A	560.83	560.84	PSS1/FO4B	FLAT - ORGANIC	I A 3, II C 2	WETLAND	78	78								0.01		
3	L1	5A	560.84	560.93	U	N/A	I A 2	UPLAND	472		472							0.09		
3	L1	5A	560.93	560.94	R4SB	RIVERINE	NONE	WETLAND	20	20								0.00		
3	L1	3	560.94	560.94	R4SB	RIVERINE	NONE	WETLAND	9	9						0.00				
3	L1	3	560.94	560.94	U	N/A	I A 2, II B 2	UPLAND	21		21					0.00				
3	L1	5A	560.94	560.96	U	N/A	I A 2, II B 2	UPLAND	90		90							0.02		
3	L1	WB-S	560.96	560.97	U	N/A	I A 2, II B 2	UPLAND	37		37									0.01
3	L1	WB-S	560.97	561.01	R3UBH	RIVERINE	NONE	WETLAND	204	204										0.04
3	L1	WB-S	561.01	561.01	R3USC	RIVERINE	NONE	WETLAND	26	26										0.00
3	L1	WB-S	561.01	561.01	PSS1C	RIVERINE	II B 2, II C 2	WETLAND	15	15										0.00
3	L1	WB-S	561.01	561.03	U	N/A	I A 2, II C 2	UPLAND	78		78									0.01
3	L1	5A	561.03	561.15	U	N/A	I A 2, II C 2	UPLAND	660		660							0.12		
3	L1	WB-S	561.15	561.17	U	N/A	I A 2, II C 2	UPLAND	90		90									0.02
3	L1	5A	561.17	561.18	U	N/A	I A 2, II C 2	UPLAND	23		23							0.00		
3	L1	5A	561.18	561.27	PFO4/SS4B	FLAT - ORGANIC	I A 2, II A 2	WETLAND	513	513								0.10		
3	L1	5A	561.27	561.48	U	N/A	I A 2, II C 2	UPLAND	1092		1092							0.21		
3	L1	5A	561.48	561.52	PSS4/1B	SLOPE	I A 2, II C 2	WETLAND	214	214								0.04		
3	L1	5A	561.52	561.52	PSS1/FO4B	SLOPE	II C 2, I A 3	WETLAND	24	24								0.00		
3	L1	5A	561.52	561.59	PSS4/1B	SLOPE	I A 2, II C 2	WETLAND	351	351								0.07		
3	L1	5A	561.59	561.62	PSS1/FO4B	SLOPE	II C 2, I A 3	WETLAND	157	157								0.03		
3	L1	5A	561.62	561.71	PSS4/1B	SLOPE	I A 2, II C 2	WETLAND	485	485								0.09		
3	L1	5A	561.71	562.26	U	N/A	I A 2, II C 1	UPLAND	2902		2902							0.55		
3	L1	5A	562.26	562.65	PSS1B	FLAT - ORGANIC	II C 1	WETLAND	2025	2025								0.38		
3	L1	5A	562.65	562.67	U	N/A	II B 1, II C 2	UPLAND	144		144							0.03		
3	L1	5A	562.67	562.77	PSS1B	FLAT - ORGANIC	II C 1	WETLAND	507	507								0.10		
3	L1	5A	562.77	562.81	U	N/A	II B 1, II C 2	UPLAND	217		217							0.04		
3	L1	5A	562.81	562.85	PEM1/SS1B	FLAT - ORGANIC	III A 2, II C 2	WETLAND	198	198								0.04		
3	L1	5A	562.85	562.86	U	N/A	II B 1, II C 2	UPLAND	83		83							0.02		
3	L1	5A	562.86	562.88	PEM1/SS1B	FLAT - ORGANIC	III A 2, II C 2	WETLAND	102	102								0.02		
3	L1	5A	562.88	562.95	U	N/A	II B 1, II C 2	UPLAND	382		382							0.07		
3	L1	5A	562.95	562.96	U	N/A	II C 2, III A 2	UPLAND	2		2							0.00		
3	L1	5A	562.96	562.96	U	N/A	I A 2, II C 2	UPLAND	24		24							0.00		
3	L1	5A	562.96	562.97	U	N/A	II C 2, III A 2	UPLAND	79		79							0.01		
3	L1	5A	562.97	562.98	U	N/A	II B 1, I A 3	UPLAND	9		9							0.00		
3	L1	WB-S	562.98	562.99	U	N/A	II B 1, I A 3	UPLAND	61		61									0.01
3	L1	5A	562.99	563.00	U	N/A	II B 1, I A 3	UPLAND	60		60							0.01		

SPREAD	SECTION	ROW MODE	FROM MP	TO MP	NWI CODE	HGM CLASS	VIERECK	DESCRIPTION	LINEAR FEET	WETLAND FEET	UPLAND FEET	DISTURBED FEET	Comments	Mode 1 - Ice Workpad (miles)	Mode 2 - Frost Pack (miles)	Mode 3 - Timber Mats	Mode 4 - Granular Workpad	Mode 5A - Grade	Mode 5B - Mountain Grade	Stream & Flood Plain Crossings
3	L1	5A	563.00	563.51	U	N/A	II C 2, III A 2	UPLAND	2714		2714							0.51		
3	L1	5A	563.51	563.57	PSS1/EM1B	FLAT - ORGANIC	II C 2, III A 2	WETLAND	307	307								0.06		
3	L1	5A	563.57	563.67	U	N/A	II C 2, III A 2	UPLAND	507		507							0.10		
3	L1	5A	563.67	563.76	PSS1/EM1B	FLAT - ORGANIC	II C 2, III A 2	WETLAND	490	490								0.09		
3	L1	5A	563.76	564.03	U	N/A	II C 2, III A 2	UPLAND	1398		1398							0.26		
3	L1	5A	564.03	564.35	PSS1/EM1B	FLAT - ORGANIC	II C 1, III A 2	WETLAND	1719	1719								0.33		
3	L1	5A	564.35	564.42	U	N/A	II C 2, III A 2	UPLAND	353		353							0.07		
3	L1	5A	564.42	564.51	PSS1/EM1B	FLAT - ORGANIC	II C 2, III A 2	WETLAND	469	469								0.09		
3	L1	5A	564.51	564.57	PSS1/EM1B	FLAT - ORGANIC	II C 2, III A 2	WETLAND	326	326								0.06		
3	L1	5A	564.57	564.57	PSS1/EM1B	SLOPE	II C 2, III A 2	WETLAND	14	14								0.00		
3	L1	5A	564.57	564.58	U	N/A	II C 2, III A 1	UPLAND	56		56							0.01		
3	L1	5A	564.58	564.61	PSS1/EM1B	SLOPE	II C 2, III A 2	WETLAND	174	174								0.03		
3	L1	WB-S	564.61	564.63	PSS1/EM1B	SLOPE	II C 2, III A 2	WETLAND	60	60										0.01
3	L1	5A	564.63	564.63	PSS1/EM1B	SLOPE	II C 2, III A 2	WETLAND	16	16								0.00		
3	L1	5A	564.63	564.77	PSS1/EM1B	FLAT - ORGANIC	II C 2, III A 2	WETLAND	761	761								0.14		
3	L1	5A	564.77	564.90	U	N/A	II C 2	UPLAND	656		656							0.12		
3	L1	5A	564.90	564.91	PEM1/SS1B	FLAT - ORGANIC	III A 2, II C 2	WETLAND	74	74								0.01		
3	L1	5A	564.91	564.97	U	N/A	II C 2	UPLAND	315		315							0.06		
3	L1	5A	564.97	564.98	PEM1/SS1B	FLAT - ORGANIC	III A 2, II C 2	WETLAND	68	68								0.01		
3	L1	5A	564.98	565.14	U	N/A	II C 2	UPLAND	821		821							0.16		
3	L1	5A	565.14	565.62	U	N/A	II C 2, III A 1	UPLAND	2547		2547							0.48		
3	L1	5A	565.62	566.02	U	N/A	II B 2, II C 2	UPLAND	2113		2113							0.40		
3	L1	5A	566.02	566.03	PSS1/EM1B	SLOPE	II C 2, III A 2	WETLAND	54	54								0.01		
3	L1	5A	566.03	566.29	U	N/A	II B 2, II C 2	UPLAND	1372		1372							0.26		
3	L1	5A	566.29	566.43	U	N/A	I A 3, II C 2	UPLAND	753		753							0.14		
3	L1	5A	566.43	566.44	D	N/A	NONE	DISTURBED	26			26						0.01		
3	L1	5A	566.44	566.48	U	N/A	I A 2	UPLAND	219		219							0.04		
3	L1	5A	566.48	566.48	D	N/A	NONE	DISTURBED	19			19						0.00		
3	L1	5A	566.48	566.75	U	N/A	I A 2	UPLAND	1417		1417							0.27		
3	L1	5A	566.75	566.76	D	N/A	NONE	DISTURBED	20			20						0.00		
3	L1	5A	566.76	566.80	U	N/A	I C 2, II B 2	UPLAND	216		216							0.04		
3	L1	5A	566.80	566.80	PSS1C	DEPRESSIONAL	II B 2	WETLAND	21	21								0.00		
3	L1	5A	566.80	566.84	U	N/A	I C 2, II B 2	UPLAND	182		182							0.03		
3	L1	5A	566.84	566.84	PSS1C	DEPRESSIONAL	II B 2	WETLAND	12	12								0.00		
3	L1	5A	566.84	566.85	U	N/A	I C 2, II B 2	UPLAND	81		81							0.02		
3	L1	5A	566.85	566.86	D	N/A	NONE	DISTURBED	15			15						0.00		
3	L1	5A	566.86	566.86	U	N/A	II B 2	UPLAND	39		39							0.01		
3	L1	WB-S	566.86	566.87	U	N/A	II B 2	UPLAND	26		26									0.00
3	L1	WB-S	566.87	566.87	D	N/A	NONE	DISTURBED	7			7								0.00
3	L1	WB-S	566.87	566.88	U	N/A	II B 2	UPLAND	33		33									0.01
3	L1	WB-S	566.88	566.89	R3UBH	RIVERINE	NONE	WETLAND	80	80										0.02
3	L1	WB-S	566.89	566.90	R3USC	RIVERINE	NONE	WETLAND	30	30										0.01
3	L1	WB-S	566.90	566.91	U	N/A	I A 3, II C 2	UPLAND	65		65									0.01
3	L1	5A	566.91	567.12	U	N/A	I A 3, II C 2	UPLAND	1110		1110							0.21		
3	L2	WB-S	567.12	567.14	U	N/A	I A 3, II C 2	UPLAND	89		89									0.02
3	L2	5A	567.14	567.20	U	N/A	I A 3, II C 2	UPLAND	343		343							0.06		
3	L2	5A	567.20	567.22	D	N/A	NONE	DISTURBED	107			107						0.02		
3	L2	5A	567.22	567.23	U	N/A	I A 2, II B 2	UPLAND	60		60							0.01		
3	L2	WB-S	567.23	567.24	U	N/A	I A 2, II B 2	UPLAND	60		60									0.01
3	L2	5A	567.24	567.27	U	N/A	I A 2, II B 2	UPLAND	140		140							0.03		
3	L2	5A	567.27	567.28	U	N/A	II C 2	UPLAND	23		23							0.00		
3	L2	5A	567.28	567.28	D	N/A	NONE	DISTURBED	25			25						0.00		
3	L2	5A	567.28	567.33	U	N/A	I A 3, II C 2	UPLAND	282		282							0.05		
3	L2	5A	567.33	567.41	PSS1/EM1B	FLAT - ORGANIC	II C 1, III A 2	WETLAND	426	426								0.08		
3	L2	5A	567.41	567.45	U	N/A	I A 3, II C 2	UPLAND	207		207							0.04		
3	L2	5A	567.45	567.49	PSS1/EM1B	FLAT - ORGANIC	II C 1, III A 2	WETLAND	178	178								0.03		
3	L2	5A	567.49	567.63	U	N/A	I A 3, II C 2	UPLAND	774		774							0.15		
3	L2	5A	567.63	567.68	PSS1/EM1B	FLAT - ORGANIC	II C 1, III A 2	WETLAND	249	249								0.05		
3	L2	5A	567.68	567.94	U	N/A	II C 2, III A 1	UPLAND	1360		1360							0.26		
3	L2	5A	567.94	568.39	PSS1/EM1B	FLAT - ORGANIC	II C 2, III A 2	WETLAND	2368	2368								0.45		
3	L2	5A	568.39	568.39	PSS1/EM1B	FLAT - ORGANIC	II C 2, III A 2	WETLAND	10	10								0.00		
3	L2	5A	568.39	568.78	PSS1/EM1B	FLAT - ORGANIC	II C 2, III A 2	WETLAND	2063	2063								0.39		
3	L2	5A	568.78	568.80	U	N/A	II C 2, III A 1	UPLAND	108		108							0.02		
3	L2	5A	568.80	568.82	PSS1C	RIVERINE	II B 1, II C 2	WETLAND	95	95								0.02		
3	L2	WB-S	568.82	568.82	PSS1C	RIVERINE	II B 1, II C 2	WETLAND	5	5										0.00
3	L2	WB-S	568.82	568.83	R3UBH	RIVERINE	NONE	WETLAND	36	36										0.01
3	L2	WB-S	568.83	568.84	PSS1C	RIVERINE	II B 1, II C 2	WETLAND	50	50										0.01
3	L2	5A	568.84	568.87	PSS1C	RIVERINE	II B 1, II C 2	WETLAND	186	186								0.04		
3	L2	5A	568.87	568.90	PSS1/EM1B	RIVERINE	II C 1, III A 2	WETLAND	163	163								0.03		
3	L2	5A	568.90	568.96	PSS1/EM1C	SLOPE	II C 1, III A 3	WETLAND	307	307								0.06		
3	L2	5A	568.96	568.97	PSS1/EM1B	FLAT - ORGANIC	II C 1, III A 2	WETLAND	45	45								0.01		
3	L2	5A	568.97	569.06	U	N/A	I A 3, II C 2	UPLAND	476		476							0.09		

SPREAD	SECTION	ROW MODE	FROM MP	TO MP	NWI CODE	HGM CLASS	VIERECK	DESCRIPTION	LINEAR FEET	WETLAND FEET	UPLAND FEET	DISTURBED FEET	Comments	Mode 1 - Ice Workpad (miles)	Mode 2 - Frost Pack (miles)	Mode 3 - Timber Mats	Mode 4 - Granular Workpad	Mode 5A - Grade	Mode 5B - Mountain Grade	Stream & Flood Plain Crossings
3	L2	5A	569.06	569.28	PSS1/EM1B	FLAT - ORGANIC	II C 1, III A 2	WETLAND	1196	1196								0.23		
3	L2	5A	569.28	569.31	U	N/A	I A 3, II C 2	UPLAND	147		147							0.03		
3	L2	5A	569.31	569.34	PSS1/EM1B	FLAT - ORGANIC	II C 1, III A 2	WETLAND	119	119								0.02		
3	L2	5A	569.34	569.39	PSS1/EM1C	SLOPE	II C 1, III A 3	WETLAND	308	308								0.06		
3	L2	5A	569.39	569.40	PSS1/EM1B	FLAT - ORGANIC	II C 2, III A 2	WETLAND	15	15								0.00		
3	L2	5A	569.40	569.43	PSS1/EM1C	SLOPE	II C 1, III A 3	WETLAND	182	182								0.03		
3	L2	5A	569.43	569.49	PSS1/EM1B	FLAT - ORGANIC	II C 2, III A 2	WETLAND	326	326								0.06		
3	L2	5A	569.49	569.55	PSS1/FO4B	FLAT - ORGANIC	I A 3, II C 2	WETLAND	303	303								0.06		
3	L2	5A	569.55	569.59	PSS1/EM1B	FLAT - ORGANIC	II C 2, III A 2	WETLAND	215	215								0.04		
3	L2	5A	569.59	569.69	PSS1B	FLAT - ORGANIC	II C 1	WETLAND	526	526								0.10		
3	L2	5A	569.69	569.71	PSS1/EM1B	FLAT - ORGANIC	II C 2, III A 2	WETLAND	100	100								0.02		
3	L2	5A	569.71	569.73	PSS1/FO4B	FLAT - ORGANIC	I A 3, II C 2	WETLAND	88	88								0.02		
3	L2	5A	569.73	569.75	PSS1/EM1B	FLAT - ORGANIC	II C 2, III A 2	WETLAND	130	130								0.02		
3	L2	5A	569.75	569.77	PSS1B	FLAT - ORGANIC	II C 1	WETLAND	95	95								0.02		
3	L2	5A	569.77	569.79	PSS1/EM1B	FLAT - ORGANIC	II C 2, III A 2	WETLAND	104	104								0.02		
3	L2	5A	569.79	570.01	PSS1B	FLAT - ORGANIC	II C 1	WETLAND	1191	1191								0.23		
3	L2	5A	570.01	570.02	PSS1/EM1B	FLAT - ORGANIC	II C 2, III A 2	WETLAND	34	34								0.01		
3	L2	5A	570.02	570.03	PSS1/EM1C	SLOPE	II C 1, III A 3	WETLAND	57	57								0.01		
3	L2	5A	570.03	570.09	PSS1/EM1B	FLAT - ORGANIC	II C 2, III A 2	WETLAND	285	285								0.05		
3	L2	5A	570.09	570.10	PSS1/EM1C	SLOPE	II C 1, III A 3	WETLAND	55	55								0.01		
3	L2	5A	570.10	570.13	PSS1/EM1B	FLAT - ORGANIC	II C 2, III A 2	WETLAND	173	173								0.03		
3	L2	5A	570.13	570.21	U	N/A	II C 1, I A 3	UPLAND	408		408							0.08		
3	L2	5A	570.21	570.22	PSS1/EM1B	FLAT - ORGANIC	II C 2, III A 2	WETLAND	87	87								0.02		
3	L2	5A	570.22	570.23	U	N/A	II C 1, I A 3	UPLAND	22		22							0.00		
3	L2	5A	570.23	570.43	U	N/A	I A 3, II C 2	UPLAND	1087		1087							0.21		
3	L2	5A	570.43	570.44	U	N/A	II C 1, I A 3	UPLAND	46		46							0.01		
3	L2	5A	570.44	570.46	U	N/A	I A 3, II C 2	UPLAND	90		90							0.02		
3	L2	5A	570.46	570.91	U	N/A	II C 1, I A 3	UPLAND	2393		2393							0.45		
3	L2	5A	570.91	570.92	D	N/A	NONE	DISTURBED	35			35						0.01		
3	L2	5A	570.92	572.05	U	N/A	II C 1, I A 3	UPLAND	5996		5996							1.14		
3	L2	5A	572.05	572.15	PSS1/EM1B	FLAT - ORGANIC	II C 2, III A 2	WETLAND	512	512								0.10		
3	L2	5A	572.15	572.16	U	N/A	II C 1, I A 3	UPLAND	44		44							0.01		
3	L2	5A	572.16	572.17	PSS1/EM1B	FLAT - ORGANIC	II C 2, III A 2	WETLAND	60	60								0.01		
3	L2	5A	572.17	572.61	U	N/A	II C 1, I A 3	UPLAND	2323		2323							0.44		
3	L2	5A	572.61	572.62	D	N/A	NONE	DISTURBED	70			70						0.01		
3	L2	5A	572.62	572.78	U	N/A	II B 2, II C 2	UPLAND	848		848							0.16		
3	L2	5A	572.78	572.80	D	N/A	NONE	DISTURBED	58			58						0.01		
3	L2	5A	572.80	573.08	U	N/A	II B 2,II C 1	UPLAND	1504		1504							0.28		
3	L2	5A	573.08	573.09	PSS1/EM1B	SLOPE	II B 2, III A 2	WETLAND	55	55								0.01		
3	L2	5A	573.09	573.10	PSS1/EM1C	SLOPE	II C 2, III A 2	WETLAND	49	49								0.01		
3	L2	5A	573.10	573.11	PSS1/EM1B	SLOPE	II B 2, III A 2	WETLAND	44	44								0.01		
3	L2	5A	573.11	573.17	PSS1/EM1C	SLOPE	II C 2, III A 2	WETLAND	302	302								0.06		
3	L2	5A	573.17	573.17	PSS1/EM1B	SLOPE	II B 2, III A 2	WETLAND	36	36								0.01		
3	L2	5A	573.17	573.18	PSS1/EM1C	SLOPE	II C 2, III A 2	WETLAND	24	24								0.00		
3	L2	5A	573.18	573.18	PSS1/EM1B	SLOPE	II B 2, III A 2	WETLAND	40	40								0.01		
3	L2	5A	573.18	573.23	PSS1/EM1C	SLOPE	II C 2, III A 2	WETLAND	238	238								0.05		
3	L2	5A	573.23	573.24	PSS1/EM1B	SLOPE	II B 2, III A 2	WETLAND	42	42								0.01		
3	L2	5A	573.24	573.26	PSS1/EM1C	SLOPE	II C 2, III A 2	WETLAND	135	135								0.03		
3	L2	5A	573.26	573.27	PEM1/SS1C	RIVERINE	III A 2, II B 2	WETLAND	20	20								0.00		
3	L2	4	573.27	573.30	PEM1/SS1C	RIVERINE	III A 2, II B 2	WETLAND	174	174							0.03			
3	L2	4	573.30	573.37	PSS1/EM1C	SLOPE	II C 2, III A 2	WETLAND	396	396							0.07			
3	L2	5A	573.37	573.38	PSS1/EM1C	SLOPE	II C 2, III A 2	WETLAND	28	28								0.01		
3	L2	5A	573.38	575.34	U	N/A	II C 1	UPLAND	10344		10344							1.96		
3	L2	5A	575.34	575.47	PSS1B	FLAT - ORGANIC	II C 2, III A 2	WETLAND	707	707								0.13		
3	L2	5A	575.47	575.53	U	N/A	II C 1	UPLAND	300		300							0.06		
3	L2	5A	575.53	575.54	PSS1/EM1B	FLAT - ORGANIC	II C 2, III A 2	WETLAND	70	70								0.01		
3	L2	5A	575.54	575.56	U	N/A	II C 1	UPLAND	105		105							0.02		
3	L2	5A	575.56	575.64	PSS1/EM1B	FLAT - ORGANIC	II C 2, III A 2	WETLAND	389	389								0.07		
3	L2	5A	575.64	575.68	PSS1B	FLAT - ORGANIC	II C 2, I A 3	WETLAND	216	216								0.04		
3	L2	5A	575.68	575.70	U	N/A	I A 3, II C 2	UPLAND	136		136							0.03		
3	L2	5A	575.70	575.75	PSS1B	FLAT - ORGANIC	II C 2, I A 3	WETLAND	262	262								0.05		
3	L2	5A	575.75	575.79	PSS1/EM1B	DEPRESSIONAL	II C 2, III A 2	WETLAND	200	200								0.04		
3	L2	5A	575.79	575.82	PSS1/FO4B	FLAT - ORGANIC	II C 2, I A 3	WETLAND	159	159								0.03		
3	L2	5A	575.82	577.42	U	N/A	II C 1	UPLAND	8423		8423							1.60		
3	L2	5A	577.42	577.45	U	N/A	II B 2, II C 1	UPLAND	183		183							0.03		
3	L2	5A	577.45	577.45	D	N/A	NONE	DISTURBED	11			11						0.00		
3	L2	5A	577.45	577.46	U	N/A	II B 2, II C 1	UPLAND	40		40							0.01		
3	L2	5A	577.46	577.49	U	N/A	I A 3, II B 2	UPLAND	152		152							0.03		
3	L2	5A	577.49	577.51	PSS1/EM1B	FLAT - ORGANIC	II C 2, III A 2	WETLAND	97	97								0.02		
3	L2	5A	577.51	577.51	PEM1/SS1F	DEPRESSIONAL	III A 3, II C 2	WETLAND	18	18								0.00		
3	L2	3	577.51	577.58	PEM1/SS1F	DEPRESSIONAL	III A 3, II C 2	WETLAND	360	360						0.07				
3	L2	5A	577.58	577.59	PEM1/SS1F	DEPRESSIONAL	III A 3, II C 2	WETLAND	36	36								0.01		

SPREAD	SECTION	ROW MODE	FROM MP	TO MP	NWI CODE	HGM CLASS	VIERECK	DESCRIPTION	LINEAR FEET	WETLAND FEET	UPLAND FEET	DISTURBED FEET	Comments	Mode 1 - Ice Workpad (miles)	Mode 2 - Frost Pack (miles)	Mode 3 - Timber Mats	Mode 4 - Granular Workpad	Mode 5A - Grade	Mode 5B - Mountain Grade	Stream & Flood Plain Crossings
3	L2	5A	577.59	577.60	PSS1B	FLAT - ORGANIC	II C 1	WETLAND	75	75								0.01		
3	L2	5A	577.60	577.61	PSS1/EM1B	FLAT - ORGANIC	II C 2, III A 2	WETLAND	49	49								0.01		
3	L2	5A	577.61	577.62	PSS1B	FLAT - ORGANIC	II C 1	WETLAND	40	40								0.01		
3	L2	5A	577.62	577.68	U	N/A	II C 1	UPLAND	353		353							0.07		
3	L2	5A	577.68	577.70	PSS1B	FLAT - ORGANIC	II C 1	WETLAND	65	65								0.01		
3	L2	5A	577.70	577.70	PSS1/EM1B	FLAT - ORGANIC	II C 2, III A 2	WETLAND	29	29								0.01		
3	L2	5A	577.70	577.73	PSS1B	FLAT - ORGANIC	II C 1	WETLAND	163	163								0.03		
3	L2	5A	577.73	577.73	PSS1/EM1B	FLAT - ORGANIC	II C 2, III A 2	WETLAND	7	7								0.00		
3	L2	5A	577.73	577.73	PSS1B	FLAT - ORGANIC	II C 1	WETLAND	3	3								0.00		
3	L2	5A	577.73	577.77	U	N/A	II C 1	UPLAND	171		171							0.03		
3	L2	5A	577.77	577.78	PSS1/EM1B	FLAT - ORGANIC	II C 2, III A 2	WETLAND	66	66								0.01		
3	L2	5A	577.78	577.79	PEM1/SS1F	DEPRESSIONAL	III A 3, II C 2	WETLAND	54	54								0.01		
3	L2	3	577.79	577.80	PEM1/SS1F	DEPRESSIONAL	III A 3, II C 2	WETLAND	60	60						0.01				
3	L2	WB-S	577.80	577.81	PEM1/SS1F	DEPRESSIONAL	III A 3, II C 2	WETLAND	24	24										0.00
3	L2	WB-S	577.81	577.81	PEM1/SS1E	SLOPE	III A 3, II C 2	WETLAND	38	38										0.01
3	L2	WB-S	577.81	577.83	PEM1F	DEPRESSIONAL	III A 3	WETLAND	108	108										0.02
3	L2	WB-S	577.83	577.85	PSS1/EM1B	FLAT - ORGANIC	II C 2, III A 2	WETLAND	70	70										0.01
3	L2	5A	577.85	577.86	PSS1/EM1B	FLAT - ORGANIC	II C 2, III A 2	WETLAND	64	64								0.01		
3	L2	5A	577.86	579.64	U	N/A	II C 1	UPLAND	9408		9408							1.78		
3	L2	5A	579.64	580.15	U	N/A	II C 1	UPLAND	2684		2684							0.51		
3	L2	5A	580.15	580.15	PEM1/SS1C	FLAT - ORGANIC	III A 3, II C 2	WETLAND	31	31								0.01		
3	L2	5A	580.15	580.38	U	N/A	II C 1	UPLAND	1209		1209							0.23		
3	L2	5A	580.38	580.76	U	N/A	I A 3, II C 2	UPLAND	1980		1980							0.37		
3	L2	5A	580.76	581.03	U	N/A	II C 1	UPLAND	1423		1423							0.27		
3	L2	5A	581.03	581.09	PSS1/FO4B	SLOPE	II B 2, I A 3	WETLAND	304	304								0.06		
3	L2	5A	581.09	581.49	U	N/A	II C 2	UPLAND	2124		2124							0.40		
3	L2	5A	581.49	581.50	U	N/A	II C 2	UPLAND	42		42							0.01		
3	L2	5A	581.50	581.50	U	N/A	II C 2	UPLAND	17		17							0.00		
3	L2	5A	581.50	581.52	PSS1B	FLAT - ORGANIC	II C 2	WETLAND	92	92								0.02		
3	L2	5A	581.52	581.64	U	N/A	II C 2	UPLAND	643		643							0.12		
3	L2	5A	581.64	581.73	PSS1B	FLAT - ORGANIC	II C 2	WETLAND	499	499								0.09		
3	L2	5A	581.73	581.93	U	N/A	II C 2	UPLAND	1056		1056							0.20		
3	L2	5A	581.93	581.95	PSS1B	FLAT - ORGANIC	II C 2	WETLAND	69	69								0.01		
3	L2	5A	581.95	581.98	U	N/A	II C 2	UPLAND	168		168							0.03		
3	L2	5A	581.98	582.35	PSS1B	FLAT - ORGANIC	II C 2	WETLAND	1955	1955								0.37		
3	L2	5A	582.35	582.40	U	N/A	II C 2	UPLAND	290		290							0.05		
3	L2	5A	582.40	582.43	PSS1B	RIVERINE	II B 1, III A 2	WETLAND	122	122								0.02		
3	L2	5A	582.43	582.45	PSS1/FO4B	SLOPE	I C 2, II B 2	WETLAND	106	106								0.02		
3	L2	5A	582.45	582.51	PSS1/FO4B	SLOPE	II B 2, I A 3	WETLAND	360	360								0.07		
3	L2	5A	582.51	582.53	U	N/A	I A 2, II B 2	UPLAND	60		60							0.01		
3	L2	5A	582.53	582.54	PSS1/FO4B	SLOPE	II B 2, I A 3	WETLAND	61	61								0.01		
3	L2	5A	582.54	582.58	U	N/A	I A 3, II C 2	UPLAND	228		228							0.04		
3	L2	5A	582.58	582.61	PSS1/FO4B	SLOPE	II B 1, I C 3	WETLAND	143	143								0.03		
3	L2	5A	582.61	582.61	U	N/A	II C 1	UPLAND	39		39							0.01		
3	L2	5A	582.61	582.69	U	N/A	I A 3, II C 2	UPLAND	390		390							0.07		
3	L2	5A	582.69	582.87	U	N/A	II C 1	UPLAND	947		947							0.18		
3	L2	WB-S	582.87	582.87	U	N/A	II C 1	UPLAND	1		1									0.00
3	L2	WB-S	582.87	582.88	U	N/A	III A 2, II C 2	UPLAND	43		43									0.01
3	L2	WB-S	582.88	582.88	PSS1A	RIVERINE	II B 1	WETLAND	46	46										0.01
3	L2	5A	582.88	582.89	PSS1A	RIVERINE	II B 1	WETLAND	43	43								0.01		
3	L2	5A	582.89	582.90	R3UBHb	RIVERINE	NONE	WETLAND	16	16								0.00		
3	L2	5A	582.90	582.91	U	N/A	II B 1, I B 3	UPLAND	91		91							0.02		
3	L2	5A	582.91	582.92	U	N/A	I A 3, II B 2	UPLAND	31		31							0.01		
3	L2	5A	582.92	583.07	U	N/A	II C 1	UPLAND	810		810							0.15		
3	L2	5A	583.07	583.11	PSS1B	SLOPE	II B 2	WETLAND	178	178								0.03		
3	L2	5A	583.11	583.16	U	N/A	II C 1	UPLAND	307		307							0.06		
3	L2	5A	583.16	583.20	U	N/A	I A 3, II B 2	UPLAND	213		213							0.04		
3	L2	5A	583.20	583.25	U	N/A	II C 1	UPLAND	241		241							0.05		
3	L2	5A	583.25	583.40	U	N/A	I A 3, II B 2	UPLAND	810		810							0.15		
3	L2	5A	583.40	583.48	U	N/A	II C 1	UPLAND	395		395							0.07		
3	L2	5A	583.48	583.51	U	N/A	I A 3, II B 2	UPLAND	189		189							0.04		
3	L2	5A	583.51	583.56	U	N/A	II C 1	UPLAND	263		263							0.05		
3	L2	5A	583.56	583.88	U	N/A	I A 3, II B 2	UPLAND	1688		1688							0.32		
3	L2	5A	583.88	583.89	PSS1C	RIVERINE	II B 2, I A 3	WETLAND	14	14								0.00		
3	L2	WB-S	583.89	583.89	PSS1C	RIVERINE	II B 2, I A 3	WETLAND	25	25										0.00
3	L2	WB-S	583.89	583.90	U	N/A	I A 3, II B 2	UPLAND	35		35									0.01
3	L2	5A	583.90	583.90	U	N/A	I A 3, II B 2	UPLAND	33		33							0.01		
3	L2	5A	583.90	584.00	U	N/A	II C 1	UPLAND	490		490							0.09		
3	L2	5A	584.00	584.04	U	N/A	I A 3, II B 2	UPLAND	205		205							0.04		
3	L2	5A	584.04	584.06	U	N/A	II C 1	UPLAND	149		149							0.03		
3	L2	5A	584.06	584.11	U	N/A	I A 3, II B 2	UPLAND	256		256							0.05		
3	L2	5A	584.11	584.15	U	N/A	II C 1	UPLAND	189		189							0.04		

SPREAD	SECTION	ROW MODE	FROM MP	TO MP	NWI CODE	HGM CLASS	VIERECK	DESCRIPTION	LINEAR FEET	WETLAND FEET	UPLAND FEET	DISTURBED FEET	Comments	Mode 1 - Ice Workpad (miles)	Mode 2 - Frost Pack (miles)	Mode 3 - Timber Mats	Mode 4 - Granular Workpad	Mode 5A - Grade	Mode 5B - Mountain Grade	Stream & Flood Plain Crossings
3	L2	5A	584.15	584.64	U	N/A	I A 3, II B 2	UPLAND	2592		2592							0.49		
3	L2	5A	584.64	584.66	U	N/A	II C 1	UPLAND	99		99							0.02		
3	L2	5A	584.66	584.69	U	N/A	I A 3, II B 2	UPLAND	169		169							0.03		
3	L2	5A	584.69	584.71	U	N/A	III C 1	UPLAND	106		106							0.02		
3	L2	5A	584.71	584.74	U	N/A	I A 3, II C 2	UPLAND	139		139							0.03		
3	L2	5A	584.74	584.87	U	N/A	II C 1, III A 2	UPLAND	722		722							0.14		
3	L2	5A	584.87	584.89	U	N/A	I A 3, II C 2	UPLAND	75		75							0.01		
3	L2	5A	584.89	584.95	U	N/A	II C 1, III A 2	UPLAND	320		320							0.06		
3	L2	5A	584.95	584.95	PSS1B	SLOPE	II C 2, II B 2	WETLAND	35	35								0.01		
3	L2	5A	584.95	585.07	U	N/A	I A 3, II C 2	UPLAND	632		632							0.12		
3	L2	5A	585.07	585.12	U	N/A	II C 1	UPLAND	247		247							0.05		
3	L2	5A	585.12	585.22	U	N/A	I A 3, II C 2	UPLAND	529		529							0.10		
3	L2	5A	585.22	585.25	U	N/A	II C 1	UPLAND	146		146							0.03		
3	L2	5A	585.25	585.27	U	N/A	I A 3, II B 2	UPLAND	139		139							0.03		
3	L2	5A	585.27	585.30	U	N/A	II C 1	UPLAND	106		106							0.02		
3	L2	5A	585.30	585.34	U	N/A	I A 3, II B 2	UPLAND	255		255							0.05		
3	L2	5A	585.34	585.37	U	N/A	II C 1	UPLAND	155		155							0.03		
3	L2	5A	585.37	585.40	U	N/A	I A 3, II B 2	UPLAND	137		137							0.03		
3	L2	5A	585.40	585.40	U	N/A	II C 1	UPLAND	26		26							0.00		
3	L2	5A	585.40	585.58	U	N/A	I A 3, II B 2	UPLAND	920		920							0.17		
3	L2	5A	585.58	585.62	U	N/A	II C 1	UPLAND	226		226							0.04		
3	L2	5A	585.62	585.73	U	N/A	I A 3, II B 2	UPLAND	565		565							0.11		
3	L2	5A	585.73	585.78	U	N/A	II C 1	UPLAND	252		252							0.05		
3	L2	5A	585.78	585.84	U	N/A	I A 3, II B 2	UPLAND	319		319							0.06		
3	L2	5A	585.84	585.86	U	N/A	III A 1	UPLAND	141		141							0.03		
3	L2	5A	585.86	586.03	U	N/A	II C 1	UPLAND	882		882							0.17		
3	L2	5A	586.03	586.11	U	N/A	II C 1, I C 3	UPLAND	435		435							0.08		
3	L2	5A	586.11	586.11	PSS1/EM1Cb	RIVERINE	II B 2, III A 2	WETLAND	15	15								0.00		
3	L2	5A	586.11	586.12	PUBHb	RIVERINE	NONE	WETLAND	49	49								0.01		
3	L2	5A	586.12	586.15	PSS1/EM1Cb	RIVERINE	II B 2, III A 2	WETLAND	140	140								0.03		
3	L2	5A	586.15	586.15	PSS1C	RIVERINE	II B 2	WETLAND	1	1								0.00		
3	L2	5A	586.15	586.18	U	N/A	I A 2	UPLAND	162		162							0.03		
3	L2	5A	586.18	586.20	PSS1C	RIVERINE	II B 2	WETLAND	90	90								0.02		
3	L2	5A	586.20	586.26	U	N/A	I C 1	UPLAND	307		307							0.06		
3	L2	5A	586.26	586.28	PSS1C	RIVERINE	II B 2	WETLAND	118	118								0.02		
3	L2	5A	586.28	586.28	PUB/USF	RIVERINE	NONE	WETLAND	3	3								0.00		
3	L2	3	586.28	586.29	PUB/USF	RIVERINE	NONE	WETLAND	60	60						0.01				
3	L2	3	586.29	586.29	U	N/A	I C 1	UPLAND	0		0					0.00				
3	L2	5A	586.29	586.31	U	N/A	I C 1	UPLAND	96		96							0.02		
3	L2	5A	586.31	586.31	PSS1C	RIVERINE	II B 2	WETLAND	13	13								0.00		
3	L2	5A	586.31	586.33	U	N/A	I C 1	UPLAND	84		84							0.02		
3	L2	5A	586.33	586.33	PSS1C	RIVERINE	II B 2	WETLAND	12	12								0.00		
3	L2	5A	586.33	586.33	U	N/A	I C 1	UPLAND	5		5							0.00		
3	L2	WB-S	586.33	586.34	U	N/A	I C 1	UPLAND	23		23									0.00
3	L2	WB-S	586.34	586.35	R3UB/USH	RIVERINE	NONE	WETLAND	74	74										0.01
3	L2	WB-S	586.35	586.36	U	N/A	I A 2, II C 2	UPLAND	52		52									0.01
3	L2	5A	586.36	586.36	U	N/A	I A 2, II C 2	UPLAND	12		12							0.00		
3	L2	5A	586.36	586.38	PSS1/4B	RIVERINE	II C 2, I A 2	WETLAND	99	99								0.02		
3	L2	5A	586.38	586.43	U	N/A	I A 2, II C 2	UPLAND	282		282							0.05		
3	L2	5A	586.43	586.73	U	N/A	II C 1	UPLAND	1585		1585							0.30		
3	L2	5A	586.73	586.76	U	N/A	I A 3, II B 2	UPLAND	160		160							0.03		
3	L2	5A	586.76	586.83	PSS1C	SLOPE	II B 1	WETLAND	369	369								0.07		
3	L2	5A	586.83	586.86	U	N/A	I A 3, II B 2	UPLAND	164		164							0.03		
3	L2	WB-S	586.86	586.87	U	N/A	I A 3, II B 2	UPLAND	2		2									0.00
3	L2	WB-S	586.87	586.87	R3UBH	N/A	NONE	WETLAND	16	16										0.00
3	L2	WB-S	586.87	586.88	U	N/A	I A 3, II B 2	UPLAND	42		42									0.01
3	L2	5A	586.88	586.89	U	N/A	I A 3, II B 2	UPLAND	99		99							0.02		
3	L2	5A	586.89	586.95	D	N/A	NONE, II B 2	DISTURBED	284			284						0.05		
3	L2	5A	586.95	586.96	U	N/A	II B 2, I A 3	UPLAND	74		74							0.01		
3	L2	5A	586.96	586.98	PSS1C	RIVERINE	II B 2	WETLAND	83	83								0.02		
3	L2	5A	586.98	586.99	PUBHx	DEPRESSIONAL	NONE	WETLAND	64	64								0.01		
3	L2	5A	586.99	587.00	D	N/A	NONE, II B 2	DISTURBED	66			66						0.01		
3	L2	5A	587.00	587.28	U	N/A	II B 2, I A 3	UPLAND	1445		1445							0.27		
3	L2	5A	587.28	587.29	PSS1/4B	SLOPE	II C 2, I A 3	WETLAND	84	84								0.02		
3	L2	5A	587.29	587.62	U	N/A	II C 1, III A 2	UPLAND	1740		1740							0.33		
3	L2	5A	587.62	587.64	PSS1/4B	SLOPE	II C 2, I A 3	WETLAND	118	118								0.02		
3	L2	5A	587.64	587.67	U	N/A	II C 2, I A 3	UPLAND	150		150							0.03		
3	L2	5A	587.67	587.69	PSS1/4B	SLOPE	II C 2, I A 3	WETLAND	72	72								0.01		
3	L2	5A	587.69	587.98	U	N/A	II C 2, I A 3	UPLAND	1538		1538							0.29		
3	L2	5A	587.98	587.99	PSS1B	SLOPE	II C 2, I A 3	WETLAND	39	39								0.01		
3	L2	5A	587.99	588.06	U	N/A	II C 2, I A 3	UPLAND	414		414							0.08		
3	L2	5A	588.06	588.07	D	N/A	NONE, II B 2	DISTURBED	31			31						0.01		

SPREAD	SECTION	ROW MODE	FROM MP	TO MP	NWI CODE	HGM CLASS	VIERECK	DESCRIPTION	LINEAR FEET	WETLAND FEET	UPLAND FEET	DISTURBED FEET	Comments	Mode 1 - Ice Workpad (miles)	Mode 2 - Frost Pack (miles)	Mode 3 - Timber Mats	Mode 4 - Granular Workpad	Mode 5A - Grade	Mode 5B - Mountain Grade	Stream & Flood Plain Crossings
3	L2	5A	588.07	588.09	U	N/A	I A 2, II B 2	UPLAND	102		102							0.02		
3	L2	5A	588.09	588.09	PSS1B	SLOPE	II B 2	WETLAND	25	25								0.00		
3	L2	5A	588.09	588.22	U	N/A	I A 2, II B 2	UPLAND	640		640							0.12		
3	L2	5A	588.22	588.23	D	N/A	NONE, II B 2	DISTURBED	59			59						0.01		
3	L2	5A	588.23	588.24	PFO4/SS1B	SLOPE	I A 2, II B 2	WETLAND	79	79								0.02		
3	L2	5A	588.24	588.25	PSS1/4B	DEPRESSIONAL	II C 2, I A 3	WETLAND	69	69								0.01		
3	L2	5A	588.25	588.28	PEM1B	DEPRESSIONAL	III A 3	WETLAND	133	133								0.03		
3	L2	5A	588.28	588.28	PFO4/SS1B	SLOPE	I A 2, II B 2	WETLAND	24	24								0.00		
3	L2	5A	588.28	588.30	PFO4/SS1B	SLOPE	I A 2, II B 1	WETLAND	98	98								0.02		
3	L2	5A	588.30	588.31	PSS1B	SLOPE	I A 3, II B 2	WETLAND	50	50								0.01		
3	L2	5A	588.31	588.32	PFO4/SS1B	SLOPE	I A 2, II B 1	WETLAND	23	23								0.00		
3	L2	5A	588.32	588.32	U	N/A	I A 3, II B 2	UPLAND	18		18							0.00		
3	L2	5A	588.32	588.36	U	N/A	I A 3, II C 2	UPLAND	229		229							0.04		
3	L2	5A	588.36	588.37	PSS1B	SLOPE	I A 3, II B 2	WETLAND	49	49								0.01		
3	L2	5A	588.37	588.46	U	N/A	II B 1	UPLAND	434		434							0.08		
3	L2	5A	588.46	588.52	U	N/A	I A 3, II B 2	UPLAND	360		360							0.07		
3	L2	5A	588.52	588.56	U	N/A	I A 3, II C 2	UPLAND	201		201							0.04		
3	L2	5A	588.56	588.57	U	N/A	I A 3, II B 2	UPLAND	32		32							0.01		
3	L2	5A	588.57	588.59	PSS1B	SLOPE	II B 1, II C 1	WETLAND	93	93								0.02		
3	L2	5A	588.59	588.64	U	N/A	I A 3, II B 2	UPLAND	273		273							0.05		
3	L2	5A	588.64	588.64	PSS1B	SLOPE	II B 1, II C 1	WETLAND	20	20								0.00		
3	L2	5A	588.64	588.77	U	N/A	I A 3, II B 2	UPLAND	663		663							0.13		
3	L2	5A	588.77	588.79	PSS1B	SLOPE	II B 1	WETLAND	144	144								0.03		
3	L2	5A	588.79	588.92	U	N/A	I A 3, II B 2	UPLAND	684		684							0.13		
3	L2	5A	588.92	588.94	PSS1B	SLOPE	II B 1	WETLAND	104	104								0.02		
3	L2	5A	588.94	589.04	U	N/A	I A 3, II B 2	UPLAND	524		524							0.10		
3	L2	5A	589.04	589.05	PSS1B	SLOPE	II B 1	WETLAND	24	24								0.00		
3	L2	5A	589.05	589.09	U	N/A	I A 3, II B 2	UPLAND	246		246							0.05		
3	L2	5A	589.09	589.10	PSS1B	SLOPE	II B 1	WETLAND	47	47								0.01		
3	L2	5A	589.10	589.24	U	N/A	I A 3, II B 2	UPLAND	706		706							0.13		
3	L2	5A	589.24	589.29	PSS1/FO4B	SLOPE	II B 2, I A 3	WETLAND	285	285								0.05		
3	L2	5A	589.29	589.36	U	N/A	I A 3, II C 2	UPLAND	392		392							0.07		
3	L2	5A	589.36	589.37	PSS1B	SLOPE	II B 1	WETLAND	39	39								0.01		
3	L2	5A	589.37	589.39	U	N/A	I A 3, II B 2	UPLAND	122		122							0.02		
3	L2	5A	589.39	589.43	U	N/A	I A 3, II C 2	UPLAND	200		200							0.04		
3	L2	5A	589.43	589.48	U	N/A	I A 3, II B 2	UPLAND	228		228							0.04		
3	L2	5A	589.48	589.48	U	N/A	I A 3, II C 2	UPLAND	43		43							0.01		
3	L2	5A	589.48	589.61	U	N/A	I B 2, II B 2	UPLAND	655		655							0.12		
3	L2	5A	589.61	589.62	PSS1/EM1B	RIVERINE	II B 2, III A 2	WETLAND	52	52								0.01		
3	L2	5A	589.62	589.63	U	N/A	I C 2, II B 2	UPLAND	64		64							0.01		
3	L2	5A	589.63	589.63	PSS1/EM1B	RIVERINE	II B 2, III A 2	WETLAND	14	14								0.00		
3	L2	5A	589.63	589.70	U	N/A	I C 2, II B 2	UPLAND	376		376							0.07		
3	L2	5A	589.70	589.71	PSS1/EM1B	RIVERINE	II B 2, III A 2	WETLAND	39	39								0.01		
3	L2	5A	589.71	589.75	U	N/A	I C 2, II B 2	UPLAND	184		184							0.03		
3	L2	5A	589.75	589.76	PSS1A	RIVERINE	II B 2	WETLAND	56	56								0.01		
3	L2	WB-S	589.76	589.76	PSS1A	RIVERINE	II B 2	WETLAND	7	7										0.00
3	L2	WB-S	589.76	589.78	R3UBH	RIVERINE	NONE	WETLAND	110	110										0.02
3	L2	WB-S	589.78	589.79	U	N/A	I C 2, II B 2	UPLAND	63		63									0.01
3	L2	5A	589.79	589.84	U	N/A	I C 2, II B 2	UPLAND	250		250							0.05		
3	L2	5A	589.84	590.33	U	N/A	I A 3, II C 2	UPLAND	2589		2589							0.49		
3	L2	5A	590.33	590.51	PFO4/SS1B	SLOPE	I A 3, II C 1	WETLAND	949	949								0.18		
3	L2	5A	590.51	590.62	U	N/A	I A 3, II C 1	UPLAND	586		586							0.11		
3	L2	5A	590.62	590.63	PFO4/SS1B	SLOPE	I A 3, II C 1	WETLAND	35	35								0.01		
3	L2	WB-S	590.63	590.63	PFO4/SS1B	SLOPE	I A 3, II C 1	WETLAND	11	11										0.00
3	L2	WB-S	590.63	590.64	PSS1/EM1Bb	SLOPE	II C 2, III A 3	WETLAND	49	49										0.01
3	L2	5A	590.64	590.65	PSS1/EM1Bb	SLOPE	II C 2, III A 3	WETLAND	49	49								0.01		
3	L2	5A	590.65	590.69	U	N/A	I A 3, II C 2	UPLAND	232		232							0.04		
3	L2	5A	590.69	590.70	PSS1/FO4C	SLOPE	II C 2, I A 3	WETLAND	26	26								0.00		
3	L2	5A	590.70	590.72	U	N/A	I A 3, II C 2	UPLAND	128		128							0.02		
3	L2	5A	590.72	590.75	PSS1/FO4C	SLOPE	II C 2, I A 3	WETLAND	167	167								0.03		
3	L2	5A	590.75	590.78	U	N/A	I A 3, II C 2	UPLAND	161		161							0.03		
3	L2	5A	590.78	590.90	PSS1/FO4C	SLOPE	II C 2, I A 3	WETLAND	610	610								0.12		
3	L2	5A	590.90	590.99	U	N/A	I A 3, II C 2	UPLAND	509		509							0.10		
3	L2	5A	590.99	591.02	PSS1/FO4C	SLOPE	II C 2, I A 3	WETLAND	163	163								0.03		
3	L2	5A	591.02	591.03	PEM1/SS1F	SLOPE	III A 3, II C 2	WETLAND	25	25								0.00		
3	L2	3	591.03	591.05	PEM1/SS1F	SLOPE	III A 3, II C 2	WETLAND	87	87						0.02				
3	L2	3	591.05	591.05	PSS1/FO4C	SLOPE	I A 3, II B 2	WETLAND	3	3						0.00				
3	L2	5A	591.05	591.10	PSS1/FO4C	SLOPE	I A 3, II B 2	WETLAND	263	263								0.05		
3	L2	5A	591.10	591.19	U	N/A	I A 3, II C 1	UPLAND	507		507							0.10		
3	L2	5A	591.19	591.20	PSS1B	SLOPE	II B 1	WETLAND	64	64								0.01		
3	L2	5A	591.20	591.38	U	N/A	I A 3, II C 1	UPLAND	913		913							0.17		
3	L2	5A	591.38	591.52	PFO4/SS1B	SLOPE	I A 2, II C 2	WETLAND	767	767								0.15		

SPREAD	SECTION	ROW MODE	FROM MP	TO MP	NWI CODE	HGM CLASS	VIERECK	DESCRIPTION	LINEAR FEET	WETLAND FEET	UPLAND FEET	DISTURBED FEET	Comments	Mode 1 - Ice Workpad (miles)	Mode 2 - Frost Pack (miles)	Mode 3 - Timber Mats	Mode 4 - Granular Workpad	Mode 5A - Grade	Mode 5B - Mountain Grade	Stream & Flood Plain Crossings
3	L2	5A	591.52	591.53	PSS1B	SLOPE	II B 1	WETLAND	44	44								0.01		
3	L2	5A	591.53	591.92	U	N/A	I A 2, II C 1	UPLAND	2081		2081							0.39		
3	L2	5A	591.92	591.94	U	N/A	I A 2, II B 1	UPLAND	80		80							0.02		
3	L2	5A	591.94	592.04	PFO4/SS1B	SLOPE	I A 2, II C 2	WETLAND	514	514								0.10		
3	L2	5A	592.04	592.04	PSS1B	SLOPE	II C 2, II B 2	WETLAND	6	6								0.00		
3	L2	5A	592.04	592.04	PUBH	SLOPE	NONE	WETLAND	18	18								0.00		
3	L2	5A	592.04	592.05	PSS1B	SLOPE	II C 2, II B 2	WETLAND	57	57								0.01		
3	L2	5A	592.05	592.16	PFO4/SS1B	SLOPE	I A 2, II C 2	WETLAND	552	552								0.10		
3	L2	5A	592.16	592.16	PEM1/SS1F	SLOPE	III A 3, II C 2	WETLAND	30	30								0.01		
3	L2	5A	592.16	592.21	PFO4/SS1B	SLOPE	I A 2, II C 2	WETLAND	244	244								0.05		
3	L2	5A	592.21	592.28	U	N/A	I A 2, II C 1	UPLAND	370		370							0.07		
3	L2	5A	592.28	592.29	PFO4/SS1B	SLOPE	I A 2, II C 2	WETLAND	71	71								0.01		
3	L2	5A	592.29	592.89	U	N/A	I A 2, II C 1	UPLAND	3137		3137							0.59		
3	L2	5A	592.89	592.98	U	N/A	I A 2, II B 1	UPLAND	471		471							0.09		
3	L2	5A	592.98	593.02	U	N/A	I A 2, II C 1	UPLAND	224		224							0.04		
3	L2	5A	593.02	593.04	U	N/A	I A 2, II B 1	UPLAND	111		111							0.02		
3	L2	5A	593.04	593.05	PSS1/FO4B	SLOPE	II B 2, I A 3	WETLAND	36	36								0.01		
3	L2	5A	593.05	593.05	U	N/A	I A 2, II C 1	UPLAND	31		31							0.01		
3	L2	5A	593.05	593.06	PSS1/FO4B	SLOPE	II B 2, I A 3	WETLAND	24	24								0.00		
3	L2	5A	593.06	593.14	U	N/A	I A 2, II C 1	UPLAND	419		419							0.08		
3	L2	5A	593.14	593.14	PSS1/FO4B	SLOPE	II B 2, I A 3	WETLAND	24	24								0.00		
3	L2	5A	593.14	593.50	U	N/A	I A 2, II C 1	UPLAND	1875		1875							0.36		
3	L2	5A	593.50	593.54	U	N/A	I A 3, II B 1	UPLAND	220		220							0.04		
3	L2	5A	593.54	593.55	PSS1B	SLOPE	II B 1	WETLAND	57	57								0.01		
3	L2	5A	593.55	593.62	PSS1/EM1C	SLOPE	II C 2, III A 3	WETLAND	381	381								0.07		
3	L2	5A	593.62	593.62	PSS1/FO4B	SLOPE	I A 3, II B 2	WETLAND	1	1								0.00		
3	L2	5A	593.62	593.69	U	N/A	I A 3, II C 2	UPLAND	343		343							0.06		
3	L2	5A	593.69	593.69	PSS1C	SLOPE	II B 2, II C 2	WETLAND	30	30								0.01		
3	L2	5A	593.69	593.82	U	N/A	I A 2, II C 1	UPLAND	662		662							0.13		
3	L2	5A	593.82	593.83	U	N/A	I B 2, II B 2	UPLAND	67		67							0.01		
3	L2	5A	593.83	593.84	PSS1A	RIVERINE	II B 2	WETLAND	50	50								0.01		
3	L2	5A	593.84	593.84	R3UBH	RIVERINE	NONE	WETLAND	13	13								0.00		
3	L2	WB-S	593.84	593.85	R3UBH	RIVERINE	NONE	WETLAND	26	26										0.00
3	L2	WB-S	593.85	593.85	PSS1A	RIVERINE	II B 2	WETLAND	34	34										0.01
3	L2	5A	593.85	593.86	PSS1A	RIVERINE	II B 2	WETLAND	18	18								0.00		
3	L2	5A	593.86	593.88	U	N/A	I C 2, II B 2	UPLAND	126		126							0.02		
3	L2	5A	593.88	593.90	U	N/A	I A 3, II B 2	UPLAND	117		117							0.02		
3	L2	5A	593.90	594.23	U	N/A	I A 3, II C 2	UPLAND	1705		1705							0.32		
3	L2	5A	594.23	594.24	U	N/A	II B 1, I A 3	UPLAND	73		73							0.01		
3	L2	WB-S	594.24	594.25	U	N/A	II B 1, I A 3	UPLAND	51		51									0.01
3	L2	WB-S	594.25	594.25	U	N/A	I A 3, II C 2	UPLAND	9		9									0.00
3	L2	5A	594.25	594.47	U	N/A	I A 3, II C 2	UPLAND	1149		1149							0.22		
3	L2	5A	594.47	594.59	U	N/A	I A 2, II B 2	UPLAND	625		625							0.12		
3	L2	5A	594.59	594.62	PSS1C	SLOPE	II B 1	WETLAND	170	170								0.03		
3	L2	5A	594.62	594.65	U	N/A	I A 2, II B 2	UPLAND	144		144							0.03		
3	L2	5A	594.65	594.69	U	N/A	II B 1	UPLAND	217		217							0.04		
3	L2	5A	594.69	594.72	U	N/A	I A 2, II B 2	UPLAND	199		199							0.04		
3	L2	5A	594.72	594.73	PSS1C	SLOPE	II B 1	WETLAND	48	48								0.01		
3	L2	5A	594.73	594.77	U	N/A	I A 2, II B 2	UPLAND	173		173							0.03		
3	L2	5A	594.77	594.78	PSS1C	SLOPE	II B 1	WETLAND	58	58								0.01		
3	L2	5A	594.78	594.81	U	N/A	I A 2, II B 2	UPLAND	184		184							0.03		
3	L2	5A	594.81	594.87	U	N/A	I A 3, II C 2	UPLAND	317		317							0.06		
3	L2	5A	594.87	594.91	U	N/A	II B 1	UPLAND	189		189							0.04		
3	L2	5A	594.91	594.92	U	N/A	I A 3, II B 1	UPLAND	89		89							0.02		
3	L2	5A	594.92	594.96	PSS1C	SLOPE	II B 1	WETLAND	193	193								0.04		
3	L2	5A	594.96	594.97	U	N/A	I A 3, II B 1	UPLAND	55		55							0.01		
3	L2	5A	594.97	594.98	U	N/A	II B 1, I A 3	UPLAND	66		66							0.01		
3	L2	5A	594.98	594.99	U	N/A	I A 3, II B 1	UPLAND	36		36							0.01		
3	L2	5A	594.99	594.99	PSS1C	SLOPE	II B 1	WETLAND	14	14								0.00		
3	L2	5A	594.99	595.01	U	N/A	I A 3, II B 1	UPLAND	83		83							0.02		
3	L2	5A	595.01	595.03	PSS1C	SLOPE	II B 1	WETLAND	117	117								0.02		
3	L2	5A	595.03	595.05	U	N/A	I A 3, II B 1	UPLAND	108		108							0.02		
3	L2	5A	595.05	595.08	U	N/A	II B 1	UPLAND	174		174							0.03		
3	L2	5A	595.08	595.18	U	N/A	I A 3, II B 1	UPLAND	486		486							0.09		
3	L2	5A	595.18	595.22	U	N/A	I A 2, II C 2	UPLAND	212		212							0.04		
3	L2	5A	595.22	595.26	U	N/A	I A 3, II B 1	UPLAND	253		253							0.05		
3	L2	5A	595.26	595.29	U	N/A	II B 1	UPLAND	115		115							0.02		
3	L2	5A	595.29	595.29	PSS1B	RIVERINE	II B 2	WETLAND	31	31								0.01		
3	L2	5A	595.29	595.38	U	N/A	I A 3, II B 1	UPLAND	463		463							0.09		
3	L2	5A	595.38	595.42	U	N/A	I A 2, II C 2	UPLAND	235		235							0.04		
3	L2	5A	595.42	595.44	U	N/A	I A 3, II B 1	UPLAND	72		72							0.01		
3	L2	5A	595.44	595.45	U	N/A	I A 2, II C 2	UPLAND	38		38							0.01		

SPREAD	SECTION	ROW MODE	FROM MP	TO MP	NWI CODE	HGM CLASS	VIERECK	DESCRIPTION	LINEAR FEET	WETLAND FEET	UPLAND FEET	DISTURBED FEET	Comments	Mode 1 - Ice Workpad (miles)	Mode 2 - Frost Pack (miles)	Mode 3 - Timber Mats	Mode 4 - Granular Workpad	Mode 5A - Grade	Mode 5B - Mountain Grade	Stream & Flood Plain Crossings
3	L2	5A	595.45	595.52	U	N/A	II B 1	UPLAND	372		372							0.07		
3	L2	5A	595.52	595.63	PSS1/FO4B	SLOPE	II B 2, I A 3	WETLAND	585	585								0.11		
3	L2	5A	595.63	595.67	U	N/A	II B 1	UPLAND	215		215							0.04		
3	L2	5A	595.67	595.72	U	N/A	I A 3, II B 2	UPLAND	258		258							0.05		
3	L2	5A	595.72	595.73	U	N/A	II B 1	UPLAND	95		95							0.02		
3	L2	5A	595.73	595.75	U	N/A	I A 3, II B 2	UPLAND	98		98							0.02		
3	L2	5A	595.75	595.83	U	N/A	II B 1	UPLAND	421		421							0.08		
3	L2	5A	595.83	595.84	PEM1/SS1F	DEPRESSIONAL	III A 3, II C 2	WETLAND	29	29								0.01		
3	L2	5A	595.84	595.89	PSS1B	SLOPE	II B 2	WETLAND	280	280								0.05		
3	L2	5A	595.89	595.90	PEM1/SS1E	SLOPE	III A 3, II C 2	WETLAND	71	71								0.01		
3	L2	5A	595.90	595.92	U	N/A	II B 1	UPLAND	69		69							0.01		
3	L2	5A	595.92	595.92	PEM1/SS1E	SLOPE	III A 3, II C 2	WETLAND	39	39								0.01		
3	L2	5A	595.92	595.93	PSS1B	SLOPE	II B 2	WETLAND	40	40								0.01		
3	L2	5A	595.93	595.97	U	N/A	II B 1	UPLAND	223		223							0.04		
3	L2	5A	595.97	596.00	U	N/A	II C 1	UPLAND	151		151							0.03		
3	L2	4	596.00	596.01	U	N/A	II C 1	UPLAND	9		9						0.00			
3	L2	4	596.01	596.13	PEM1/SS1E	SLOPE	III A 3, II C 2	WETLAND	681	681							0.13			
3	L2	5A	596.13	596.14	PEM1/SS1E	SLOPE	III A 3, II C 2	WETLAND	31	31								0.01		
3	L2	5A	596.14	596.17	PSS1B	SLOPE	II B 2	WETLAND	135	135								0.03		
3	L2	5A	596.17	596.17	U	N/A	II B 1	UPLAND	12		12							0.00		
3	L2	5A	596.17	596.23	U	N/A	I A 3, II B 1	UPLAND	336		336							0.06		
3	L2	5A	596.23	596.27	U	N/A	II B 1	UPLAND	212		212							0.04		
3	L2	5A	596.27	596.28	U	N/A	I A 3, II B 1	UPLAND	58		58							0.01		
3	L2	5A	596.28	596.36	U	N/A	II B 1	UPLAND	396		396							0.07		
3	L2	5A	596.36	596.37	U	N/A	I A 3, II B 1	UPLAND	79		79							0.01		
3	L2	5A	596.37	596.47	U	N/A	II B 1	UPLAND	496		496							0.09		
3	L2	5A	596.47	596.48	U	N/A	I A 3, II B 2	UPLAND	84		84							0.02		
3	L2	5A	596.48	596.49	U	N/A	II B 1	UPLAND	18		18							0.00		
3	L2	5A	596.49	596.50	U	N/A	I A 3, II B 2	UPLAND	53		53							0.01		
3	L2	5A	596.50	596.53	U	N/A	II C 1	UPLAND	185		185							0.04		
3	L2	5A	596.53	596.54	U	N/A	II B 1	UPLAND	70		70							0.01		
3	L2	5A	596.54	596.58	U	N/A	II C 1	UPLAND	214		214							0.04		
3	L2	5A	596.58	596.59	U	N/A	II B 1	UPLAND	49		49							0.01		
3	L2	5A	596.59	596.60	U	N/A	II C 1	UPLAND	48		48							0.01		
3	L2	5A	596.60	596.62	U	N/A	II B 1	UPLAND	101		101							0.02		
3	L2	5A	596.62	596.63	PSS1C	RIVERINE	II B 1	WETLAND	41	41								0.01		
3	L2	WB-S	596.63	596.64	PSS1C	RIVERINE	II B 1	WETLAND	50	50										0.01
3	L2	WB-S	596.64	596.65	U	N/A	I A 3, II B 2	UPLAND	43		43									0.01
3	L2	4	596.65	596.68	U	N/A	I A 3, II B 2	UPLAND	178		178						0.03			
3	L2	4	596.68	596.75	PFO4/SS1C	RIVERINE	I A 2, II B 2	WETLAND	341	341							0.06			
3	L2	4	596.75	596.81	U	N/A	I A 3, II B 2	UPLAND	352		352						0.07			
3	L2	5A	596.81	596.83	U	N/A	I A 3, II B 2	UPLAND	77		77							0.01		
3	L2	5A	596.83	596.87	U	N/A	II C 1, I A 3	UPLAND	247		247							0.05		
3	L2	5A	596.87	596.99	U	N/A	II B 1	UPLAND	616		616							0.12		
3	L2	5A	596.99	597.12	U	N/A	I A 3, II B 2	UPLAND	665		665							0.13		
3	L2	5A	597.12	597.17	U	N/A	II B 1	UPLAND	263		263							0.05		
3	L2	5A	597.17	597.17	U	N/A	I A 3, II B 2	UPLAND	20		20							0.00		
3	L2	5A	597.17	597.18	U	N/A	II B 1	UPLAND	55		55							0.01		
3	L2	5A	597.18	597.19	U	N/A	I A 3, II B 2	UPLAND	67		67							0.01		
3	L2	5A	597.19	597.20	U	N/A	II B 1	UPLAND	34		34							0.01		
3	L2	5A	597.20	597.24	U	N/A	I A 3, II B 2	UPLAND	231		231							0.04		
3	L2	5A	597.24	597.26	U	N/A	II B 1	UPLAND	77		77							0.01		
3	L2	5A	597.26	597.38	U	N/A	I A 3, II C 2	UPLAND	632		632							0.12		
3	L2	5A	597.38	597.39	U	N/A	II B 1	UPLAND	72		72							0.01		
3	L2	5A	597.39	597.42	U	N/A	I A 3, II C 2	UPLAND	172		172							0.03		
3	L2	5A	597.42	597.43	U	N/A	II B 1	UPLAND	24		24							0.00		
3	L2	5A	597.43	597.44	U	N/A	I A 3, II C 2	UPLAND	43		43							0.01		
3	L2	5A	597.44	597.53	U	N/A	II B 1	UPLAND	508		508							0.10		
3	L2	5A	597.53	597.58	U	N/A	I A 3, II B 2	UPLAND	241		241							0.05		
3	L2	5A	597.58	597.61	U	N/A	II B 1	UPLAND	147		147							0.03		
3	L2	5A	597.61	597.62	U	N/A	I A 3, II B 2	UPLAND	91		91							0.02		
3	L2	5A	597.62	597.65	U	N/A	II B 1	UPLAND	130		130							0.02		
3	L2	5A	597.65	598.03	U	N/A	I A 3, II B 2	UPLAND	2024		2024							0.38		
3	L2	5A	598.03	598.04	PFO4/1B	SLOPE	I A 3, II B 2	WETLAND	66	66								0.01		
3	L2	5A	598.04	598.07	U	N/A	I A 3, II B 2	UPLAND	150		150							0.03		
3	L2	5A	598.07	598.08	PSS1B	SLOPE	II B 1	WETLAND	65	65								0.01		
3	L2	5A	598.08	598.28	U	N/A	I A 3, II B 2	UPLAND	1025		1025							0.19		
3	L2	5A	598.28	598.37	U	N/A	I B 1	UPLAND	462		462							0.09		
3	L2	5A	598.37	598.50	U	N/A	I A 2	UPLAND	697		697							0.13		
3	L2	5A	598.50	598.50	R3UBH	RIVERINE	NONE	WETLAND	2	2								0.00		
3	L2	WB-S	598.50	598.51	R3UBH	RIVERINE	NONE	WETLAND	75	75										0.01
3	L2	WB-S	598.51	598.53	U	N/A	II B 2, II A 3	UPLAND	73		73									0.01

SPREAD	SECTION	ROW MODE	FROM MP	TO MP	NWI CODE	HGM CLASS	VIERECK	DESCRIPTION	LINEAR FEET	WETLAND FEET	UPLAND FEET	DISTURBED FEET	Comments	Mode 1 - Ice Workpad (miles)	Mode 2 - Frost Pack (miles)	Mode 3 - Timber Mats	Mode 4 - Granular Workpad	Mode 5A - Grade	Mode 5B - Mountain Grade	Stream & Flood Plain Crossings
3	L2	5A	598.53	598.53	U	N/A	II B 2, II A 3	UPLAND	38		38							0.01		
3	L2	5A	598.53	598.54	R3UBH	RIVERINE	NONE	WETLAND	19	19								0.00		
3	L2	5A	598.54	598.61	U	N/A	I C 2, II B 2	UPLAND	391		391							0.07		
3	L2	5A	598.61	598.70	U	N/A	II B 1	UPLAND	466		466							0.09		
3	L2	5A	598.70	598.92	U	N/A	I A 2, II C 1	UPLAND	1143		1143							0.22		
3	L2	5A	598.92	599.01	U	N/A	I A 2, II B 1	UPLAND	511		511							0.10		
3	L2	5A	599.01	599.05	U	N/A	II B 1	UPLAND	207		207							0.04		
3	L2	5A	599.05	599.07	U	N/A	I A 2, II B 1	UPLAND	114		114							0.02		
3	L2	5A	599.07	599.15	U	N/A	II B 1	UPLAND	419		419							0.08		
3	L2	5A	599.15	599.16	U	N/A	I A 2, II B 1	UPLAND	43		43							0.01		
3	L2	5A	599.16	599.17	U	N/A	II B 1	UPLAND	25		25							0.00		
3	L2	5A	599.17	599.25	U	N/A	I A 2, II B 1	UPLAND	459		459							0.09		
3	L2	5A	599.25	599.31	U	N/A	I C 3, II B 1	UPLAND	279		279							0.05		
3	L2	WB-S	599.31	599.31	U	N/A	I C 3, II B 1	UPLAND	49		49									0.01
3	L2	WB-S	599.31	599.32	U	N/A	I A 3, II B 2	UPLAND	17		17									0.00
3	L2	5A	599.32	599.32	U	N/A	I A 3, II B 2	UPLAND	8		8							0.00		
3	L2	5A	599.32	599.36	U	N/A	I A 3, II C 1	UPLAND	242		242							0.05		
3	L2	5A	599.36	599.38	U	N/A	I B 1	UPLAND	98		98							0.02		
3	L2	5A	599.38	599.43	U	N/A	II C 1	UPLAND	225		225							0.04		
3	L2	5A	599.43	599.45	U	N/A	I B 1	UPLAND	107		107							0.02		
3	L2	5A	599.45	599.51	U	N/A	II C 1	UPLAND	317		317							0.06		
3	L2	5A	599.51	599.52	U	N/A	I B 1	UPLAND	84		84							0.02		
3	L2	5A	599.52	599.53	U	N/A	II C 1	UPLAND	65		65							0.01		
3	L2	5A	599.53	599.60	U	N/A	I B 1	UPLAND	319		319							0.06		
3	L2	5A	599.60	599.61	PSS1C	SLOPE	II B 1	WETLAND	76	76								0.01		
3	L2	5A	599.61	599.75	U	N/A	II C 1	UPLAND	736		736							0.14		
3	L2	5A	599.75	599.76	PSS1B	SLOPE	II B 1	WETLAND	62	62								0.01		
3	L2	5A	599.76	599.93	U	N/A	I A 3, II C 1	UPLAND	874		874							0.17		
3	L2	5A	599.93	599.99	U	N/A	II B 1	UPLAND	343		343							0.06		
3	L2	5A	599.99	600.03	U	N/A	I A 3, II B 1	UPLAND	228		228							0.04		
3	L2	5A	600.03	600.06	U	N/A	II B 1	UPLAND	111		111							0.02		
3	L2	5A	600.06	600.07	U	N/A	I A 3, II B 1	UPLAND	103		103							0.02		
3	L2	5A	600.07	600.10	U	N/A	II B 1	UPLAND	107		107							0.02		
3	L2	5A	600.10	600.11	PSS1B	SLOPE	II B 1	WETLAND	69	69								0.01		
3	L2	5A	600.11	600.14	U	N/A	I A 3, II B 1	UPLAND	151		151							0.03		
3	L2	5A	600.14	600.24	U	N/A	II B 1	UPLAND	522		522							0.10		
3	L2	5A	600.24	600.26	U	N/A	I A 2, II B 1	UPLAND	113		113							0.02		
3	L2	5A	600.26	600.27	U	N/A	II B 1	UPLAND	49		49							0.01		
3	L2	5A	600.27	600.28	U	N/A	I A 2, II B 1	UPLAND	90		90							0.02		
3	L2	5A	600.28	600.38	U	N/A	II B 1	UPLAND	506		506							0.10		
3	L2	5A	600.38	600.46	U	N/A	II B 1, II C 2	UPLAND	419		419							0.08		
3	L2	5A	600.46	600.69	U	N/A	II B 1	UPLAND	1199		1199							0.23		
3	L2	5A	600.69	600.71	U	N/A	II C 1	UPLAND	116		116							0.02		
3	L2	5A	600.71	600.73	U	N/A	II B 1	UPLAND	98		98							0.02		
3	L2	5A	600.73	600.94	U	N/A	II C 1	UPLAND	1111		1111							0.21		
3	L2	5A	600.94	601.04	U	N/A	II B 2, II C 2	UPLAND	554		554							0.10		
3	L2	WB-S	601.04	601.05	U	N/A	II B 2, II C 2	UPLAND	62		62									0.01
3	L2	5A	601.05	601.53	U	N/A	II B 2, II C 2	UPLAND	2538		2538							0.48		
3	L2	5A	601.53	601.54	PSS1/EM1B	SLOPE	II B 2, III A 2	WETLAND	8	8								0.00		
3	L2	5A	601.54	601.65	U	N/A	II B 2, II C 2	UPLAND	587		587							0.11		
3	L2	5A	601.65	601.65	PSS1B	SLOPE	II B 2, III A 2	WETLAND	18	18								0.00		
3	L2	5A	601.65	601.75	U	N/A	II B 2, II C 2	UPLAND	512		512							0.10		
3	L2	WB-S	601.75	601.75	U	N/A	II B 2, II C 2	UPLAND	33		33									0.01
3	L2	WB-S	601.75	601.75	PSS1A	RIVERINE	II B 1	WETLAND	8	8										0.00
3	L2	WB-S	601.75	601.76	U	N/A	II C 1, II B 2	UPLAND	20		20									0.00
3	L2	5A	601.76	602.05	U	N/A	II C 1, II B 2	UPLAND	1516		1516							0.29		
3	L2	5A	602.05	602.05	PSS1C	SLOPE	II B 1	WETLAND	19	19								0.00		
3	L2	5A	602.05	602.29	U	N/A	II C 1, II B 2	UPLAND	1264		1264							0.24		
3	L2	5A	602.29	602.29	PSS1C	SLOPE	II B 1	WETLAND	27	27								0.01		
3	L2	5A	602.29	602.35	U	N/A	II C 1, II B 2	UPLAND	282		282							0.05		
3	L2	5A	602.35	602.35	PSS1C	SLOPE	II B 1	WETLAND	35	35								0.01		
3	L2	5A	602.35	602.37	U	N/A	II C 1, II B 2	UPLAND	94		94							0.02		
3	L2	5A	602.37	602.37	PSS1C	SLOPE	II B 1	WETLAND	8	8								0.00		
3	L2	5A	602.37	602.38	PSS1B	SLOPE	II B 1	WETLAND	27	27								0.01		
3	L2	5A	602.38	602.38	U	N/A	II C 1, II B 2	UPLAND	30		30							0.01		
3	L2	5A	602.38	602.42	PSS1B	SLOPE	II B 1	WETLAND	210	210								0.04		
3	L2	5A	602.42	602.52	U	N/A	II C 1, II B 2	UPLAND	494		494							0.09		
3	L2	5A	602.52	602.57	PSS1B	SLOPE	II B 1, III A 2	WETLAND	257	257								0.05		
3	L2	5A	602.57	602.60	U	N/A	II C 1, II B 2	UPLAND	194		194							0.04		
3	L2	5A	602.60	602.63	PSS1B	SLOPE	II B 1, III A 2	WETLAND	141	141								0.03		
3	L2	5A	602.63	603.19	U	N/A	II C 1, II B 2	UPLAND	2962		2962							0.56		
3	L2	5A	603.19	603.22	PSS1/EM1C	SLOPE	II B 1, III A 2	WETLAND	157	157								0.03		

SPREAD	SECTION	ROW MODE	FROM MP	TO MP	NWI CODE	HGM CLASS	VIERECK	DESCRIPTION	LINEAR FEET	WETLAND FEET	UPLAND FEET	DISTURBED FEET	Comments	Mode 1 - Ice Workpad (miles)	Mode 2 - Frost Pack (miles)	Mode 3 - Timber Mats	Mode 4 - Granular Workpad	Mode 5A - Grade	Mode 5B - Mountain Grade	Stream & Flood Plain Crossings
3	L2	5A	603.22	603.25	PEM1/SS1B	FLAT - ORGANIC	III A 2, II C 2	WETLAND	143	143								0.03		
3	L2	5A	603.25	603.26	PSS1C	FLAT - ORGANIC	II B 2	WETLAND	75	75								0.01		
3	L2	5A	603.26	603.41	PEM1/SS1C	FLAT - ORGANIC	III A 2, II C 2	WETLAND	774	774								0.15		
3	L2	5A	603.41	603.49	U	N/A	II B 2, II C 1	UPLAND	424		424							0.08		
3	L2	WB-S	603.49	603.49	U	N/A	II B 2, II C 1	UPLAND	9		9									0.00
3	L2	WB-S	603.49	603.50	R3UBH	RIVERINE	NONE	WETLAND	36	36										0.01
3	L2	WB-S	603.50	603.50	U	N/A	I C 2, II B 1	UPLAND	15		15									0.00
3	L2	5A	603.50	603.55	U	N/A	I C 2, II B 1	UPLAND	270		270							0.05		
3	L2	5A	603.55	603.64	U	N/A	II B 1	UPLAND	472		472							0.09		
3	L2	5A	603.64	603.70	U	N/A	II C 2, II B 2	UPLAND	312		312							0.06		
3	L2	5A	603.70	603.72	PSS1/EM1F	SLOPE	II C 1, III A 2	WETLAND	88	88								0.02		
3	L2	5A	603.72	603.73	PSS1/EM1B	SLOPE	II C 1, III A 2	WETLAND	48	48								0.01		
3	L2	5A	603.73	603.78	U	N/A	II B 1	UPLAND	264		264							0.05		
3	L2	5A	603.78	603.79	PSS1/EM1B	SLOPE	II C 1, III A 2	WETLAND	90	90								0.02		
3	L2	5A	603.79	603.84	PSS1/EM1F	SLOPE	II C 1, III A 2	WETLAND	267	267								0.05		
3	L2	5A	603.84	603.92	PSS1/EM1B	SLOPE	II C 1, III A 2	WETLAND	419	419								0.08		
3	L2	5A	603.92	603.92	PSS1B	SLOPE	II B 2	WETLAND	13	13								0.00		
3	L2	WB-S	603.92	603.94	PSS1B	SLOPE	II B 2	WETLAND	73	73										0.01
3	L2	WB-S	603.94	603.95	U	N/A	II C 2, II B 2	UPLAND	48		48									0.01
3	L2	5A	603.95	603.95	U	N/A	II C 2, II B 2	UPLAND	34		34							0.01		
3	L2	5A	603.95	603.98	PSS1B	SLOPE	II C 2	WETLAND	160	160								0.03		
3	L2	5A	603.98	604.06	PEM1/SS1B	SLOPE	III A 2, II C 2	WETLAND	403	403								0.08		
3	L2	5A	604.06	604.07	PSS1B	SLOPE	II C 2	WETLAND	38	38								0.01		
3	L2	5A	604.07	604.07	U	N/A	II C 2, II B 2	UPLAND	12		12							0.00		
3	L2	5A	604.07	604.10	U	N/A	II C 2, II B 2	UPLAND	156		156							0.03		
3	L2	5A	604.10	604.13	PSS1B	SLOPE	II C 2	WETLAND	143	143								0.03		
3	L2	5A	604.13	604.15	U	N/A	II C 2, II B 2	UPLAND	146		146							0.03		
3	L2	5A	604.15	604.18	U	N/A	II C 2	UPLAND	158		158							0.03		
3	L2	5A	604.18	604.19	U	N/A	II C 2, II B 2	UPLAND	14		14							0.00		
3	L2	5A	604.19	604.28	U	N/A	II C 2	UPLAND	508		508							0.10		
3	L2	5A	604.28	604.29	U	N/A	II B 1	UPLAND	55		55							0.01		
3	L2	5A	604.29	604.30	U	N/A	II C 2	UPLAND	55		55							0.01		
3	L2	5A	604.30	604.35	U	N/A	II B 1	UPLAND	244		244							0.05		
3	L2	5A	604.35	604.36	U	N/A	II C 2	UPLAND	37		37							0.01		
3	L2	5A	604.36	605.58	U	N/A	II B 1	UPLAND	6435		6435							1.22		
3	L2	5A	605.58	605.58	PSS1B	SLOPE	II C 2	WETLAND	35	35								0.01		
3	L2	5A	605.58	605.82	U	N/A	II C 2, III A 1	UPLAND	1237		1237							0.23		
3	L2	5A	605.82	605.83	PSS1/EM1B	SLOPE	II C 2, III A 2	WETLAND	80	80								0.02		
3	L2	5A	605.83	605.89	U	N/A	II C 2, III A 1	UPLAND	318		318							0.06		
3	L2	5A	605.89	605.91	U	N/A	II B 1	UPLAND	80		80							0.02		
3	L2	5A	605.91	605.92	U	N/A	II C 2, III A 1	UPLAND	71		71							0.01		
3	L2	5A	605.92	605.94	U	N/A	II B 1	UPLAND	126		126							0.02		
3	L2	5A	605.94	605.98	U	N/A	II C 2, III A 1	UPLAND	178		178							0.03		
3	L2	5A	605.98	605.99	PSS1B	SLOPE	II B 1	WETLAND	55	55								0.01		
3	L2	5A	605.99	606.00	PSS1/EM1C	SLOPE	II C 2, III A 2	WETLAND	50	50								0.01		
3	L2	5A	606.00	606.08	U	N/A	II B 1	UPLAND	454		454							0.09		
3	L2	5A	606.08	606.09	U	N/A	II C 2, III A 1	UPLAND	31		31							0.01		
3	L2	5A	606.09	606.21	U	N/A	II B 1	UPLAND	610		610							0.12		
3	L2	5A	606.21	606.21	PSS1B	SLOPE	II B 1	WETLAND	14	14								0.00		
3	L2	5A	606.21	606.22	PSS1/EM1C	SLOPE	II C 2, III A 2	WETLAND	81	81								0.02		
3	L2	5A	606.22	606.30	U	N/A	II B 1	UPLAND	384		384							0.07		
3	L2	5A	606.30	606.31	U	N/A	II C 2	UPLAND	72		72							0.01		
3	L2	5A	606.31	606.38	U	N/A	II B 1	UPLAND	386		386							0.07		
3	L2	5A	606.38	606.43	U	N/A	II B 1	UPLAND	269		269							0.05		
3	L2	5A	606.43	606.44	PSS1B	SLOPE	II B 2	WETLAND	19	19								0.00		
3	L2	5A	606.44	606.87	U	N/A	II B 1	UPLAND	2284		2284							0.43		
3	L2	5A	606.87	606.92	U	N/A	I A 3, II B 1	UPLAND	254		254							0.05		
3	L2	5A	606.92	606.94	U	N/A	II B 1	UPLAND	131		131							0.02		
3	L2	WB-S	606.94	606.95	U	N/A	II B 1	UPLAND	60		60									0.01
3	L2	5A	606.95	607.04	U	N/A	II B 1	UPLAND	430		430							0.08		
3	L2	5A	607.04	607.08	U	N/A	I C 3, II B 2	UPLAND	236		236							0.04		
3	L2	5A	607.08	607.08	D	N/A	NONE	DISTURBED	10			10						0.00		
3	L2	5A	607.08	607.16	U	N/A	II B 1	UPLAND	402		402							0.08		
3	L2	5A	607.16	607.17	PSS1/4B	DEPRESSIONAL	II C 2, II A 3	WETLAND	37	37								0.01		
3	L2	5A	607.17	607.19	PEM1/SS1B	DEPRESSIONAL	III A 2, II C 2	WETLAND	118	118								0.02		
3	L2	5A	607.19	607.19	PEM1F	DEPRESSIONAL	III A 3	WETLAND	27	27								0.01		
3	L2	3	607.19	607.22	PEM1F	DEPRESSIONAL	III A 3	WETLAND	159	159						0.03				
3	L2	3	607.22	607.26	PEM1/SS1B	DEPRESSIONAL	III A 2, II C 2	WETLAND	181	181						0.03				
3	L2	3	607.26	607.27	PEM1F	DEPRESSIONAL	III A 3	WETLAND	48	48						0.01				
3	L2	3	607.27	607.27	PEM1/SS1B	DEPRESSIONAL	III A 2, II C 2	WETLAND	1	1						0.00				
3	L2	5A	607.27	607.29	PEM1/SS1B	DEPRESSIONAL	III A 2, II C 2	WETLAND	131	131								0.02		
3	L2	5A	607.29	607.31	PSS1/4B	DEPRESSIONAL	II C 2, II A 3	WETLAND	116	116								0.02		

SPREAD	SECTION	ROW MODE	FROM MP	TO MP	NWI CODE	HGM CLASS	VIERECK	DESCRIPTION	LINEAR FEET	WETLAND FEET	UPLAND FEET	DISTURBED FEET	Comments	Mode 1 - Ice Workpad (miles)	Mode 2 - Frost Pack (miles)	Mode 3 - Timber Mats	Mode 4 - Granular Workpad	Mode 5A - Grade	Mode 5B - Mountain Grade	Stream & Flood Plain Crossings
3	L2	5A	607.31	607.32	PEM1/SS1B	DEPRESSIONAL	III A 2, II C 2	WETLAND	28	28								0.01		
3	L2	5A	607.32	607.32	PEM1F	DEPRESSIONAL	III A 3	WETLAND	25	25								0.00		
3	L2	3	607.32	607.33	PEM1F	DEPRESSIONAL	III A 3	WETLAND	38	38						0.01				
3	L2	3	607.33	607.34	PEM1/SS1B	DEPRESSIONAL	III A 2, II C 2	WETLAND	22	22						0.00				
3	L2	5A	607.34	607.34	PEM1/SS1B	DEPRESSIONAL	III A 2, II C 2	WETLAND	17	17								0.00		
3	L2	5A	607.34	607.35	PSS1/4B	DEPRESSIONAL	II C 2, II A 3	WETLAND	45	45								0.01		
3	L2	5A	607.35	607.36	U	N/A	II B 1	UPLAND	62		62							0.01		
3	L2	5A	607.36	607.37	PSS1/4B	DEPRESSIONAL	II C 2, II A 3	WETLAND	44	44								0.01		
4	A	5A	607.37	607.91	U	N/A	II B 1	UPLAND	2889		2889							0.55		
4	A	5A	607.91	607.95	PSS1B	SLOPE	II C 2, II B 1	WETLAND	198	198								0.04		
4	A	5A	607.95	607.98	U	N/A	II B 1	UPLAND	136		136							0.03		
4	A	5A	607.98	608.00	U	N/A	II B 1, I A 3	UPLAND	108		108							0.02		
4	A	5A	608.00	608.02	U	N/A	II B 1	UPLAND	136		136							0.03		
4	A	5A	608.02	608.05	U	N/A	II B 1, I A 3	UPLAND	132		132							0.03		
4	A	5A	608.05	608.06	U	N/A	II B 1	UPLAND	56		56							0.01		
4	A	5A	608.06	608.37	U	N/A	II B 1, I A 3	UPLAND	1629		1629							0.31		
4	A	5A	608.37	608.37	PSS1B	SLOPE	II B 1	WETLAND	30	30								0.01		
4	A	5A	608.37	608.67	U	N/A	II B 1, I A 3	UPLAND	1564		1564							0.30		
4	A	5A	608.67	608.79	U	N/A	I C 2, II B 2	UPLAND	641		641							0.12		
4	A	5A	608.79	608.79	PSS1/FO4B	SLOPE	II B 1, I C 3	WETLAND	18	18								0.00		
4	A	5A	608.79	608.98	U	N/A	I C 2, II B 2	UPLAND	973		973							0.18		
4	A	5A	608.98	608.98	PSS1/FO4B	SLOPE	II B 1, I C 3	WETLAND	13	13								0.00		
4	A	5A	608.98	609.00	PSS1/EM1B	SLOPE	II C 2, III A 2	WETLAND	73	73								0.01		
4	A	5A	609.00	609.00	U	N/A	I C 2, II B 2	UPLAND	42		42							0.01		
4	A	5A	609.00	609.02	PSS1C	SLOPE	II B 1	WETLAND	63	63								0.01		
4	A	5A	609.02	609.02	U	N/A	I C 2, II B 2	UPLAND	18		18							0.00		
4	A	5A	609.02	609.03	D	N/A	NONE	DISTURBED	38			38						0.01		
4	A	5A	609.03	609.07	U	N/A	II C 2	UPLAND	209		209							0.04		
4	A	5A	609.07	609.12	U	N/A	I C 2, II B 1	UPLAND	304		304							0.06		
4	A	5A	609.12	609.16	PSS1B	SLOPE	II B 2	WETLAND	174	174								0.03		
4	A	5A	609.16	609.30	U	N/A	I C 2, II B 1	UPLAND	776		776							0.15		
4	A	5A	609.30	609.31	PSS1B	SLOPE	II B 2	WETLAND	45	45								0.01		
4	A	5A	609.31	609.32	PSS1/FO4B	SLOPE	II C 2, I A 2	WETLAND	36	36								0.01		
4	A	4	609.32	609.32	PSS1/FO4B	SLOPE	II C 2, I A 2	WETLAND	31	31							0.01			
4	A	4	609.32	609.34	PEM1/SS1B	SLOPE	III A 2, II C 2	WETLAND	104	104							0.02			
4	A	4	609.34	609.36	PSS1/FO4B	SLOPE	II C 2, I A 2	WETLAND	102	102							0.02			
4	A	5A	609.36	609.39	PSS1/FO4B	SLOPE	II C 2, I A 2	WETLAND	133	133								0.03		
4	A	5A	609.39	609.39	PSS1/FO4B	SLOPE	II C 2, I A 2	WETLAND	30	30								0.01		
4	A	5A	609.39	609.42	PSS1/FO4B	SLOPE	II C 2, I A 2	WETLAND	152	152								0.03		
4	A	5A	609.42	609.44	PSS1/FO4B	SLOPE	II C 2, I A 2	WETLAND	108	108								0.02		
4	A	WB-S	609.44	609.45	PSS1/FO4B	SLOPE	II C 2, I A 2	WETLAND	60	60										0.01
4	A	5A	609.45	609.48	PSS1/FO4B	SLOPE	II C 2, I A 2	WETLAND	157	157								0.03		
4	A	5A	609.48	609.53	PSS1/FO4B	SLOPE	I A 3, II B 1	WETLAND	253	253								0.05		
4	A	5A	609.53	610.01	U	N/A	I C 2, II B 1	UPLAND	2522		2522							0.48		
4	A	5A	610.01	610.04	U	N/A	I A 2, II B 2	UPLAND	137		137							0.03		
4	A	5A	610.04	610.06	PSS1/FO4B	SLOPE	I A 3, II B 2	WETLAND	139	139								0.03		
4	A	5A	610.06	610.11	U	N/A	I A 2, II B 2	UPLAND	271		271							0.05		
4	A	5A	610.11	610.14	PSS4/1B	SLOPE	II A 2, II C 2	WETLAND	130	130								0.02		
4	A	5A	610.14	610.15	PSS1B	SLOPE	II C 2	WETLAND	47	47								0.01		
4	A	5A	610.15	610.15	PSS4/1B	SLOPE	II A 2, II C 2	WETLAND	38	38								0.01		
4	A	5A	610.15	610.18	U	N/A	I A 2, II C 2	UPLAND	110		110							0.02		
4	A	5A	610.18	610.18	PSS1B	DEPRESSIONAL	II C 2	WETLAND	34	34								0.01		
4	A	5A	610.18	610.20	U	N/A	I A 2, II C 2	UPLAND	121		121							0.02		
4	A	WB-S	610.20	610.21	U	N/A	I A 2, II C 2	UPLAND	20		20									0.00
4	A	WB-S	610.21	610.22	PSS4/1B	SLOPE	II A 2, II C 2	WETLAND	40	40										0.01
4	A	5A	610.22	610.22	PSS4/1B	SLOPE	II A 2, II C 2	WETLAND	11	11								0.00		
4	A	5A	610.22	610.32	U	N/A	I A 2, II C 2	UPLAND	562		562							0.11		
4	A	5A	610.32	610.40	U	N/A	I C 2, II B 2	UPLAND	389		389							0.07		
4	A	5A	610.40	610.41	U	N/A	I A 2, II C 2	UPLAND	66		66							0.01		
4	A	5A	610.41	610.83	U	N/A	I C 2, II B 2	UPLAND	2203		2203							0.42		
4	A	5A	610.83	611.01	U	N/A	I A 2, II C 2	UPLAND	982		982							0.19		
4	A	5A	611.01	611.05	PFO4/SS4B	DEPRESSIONAL	I A 2, II C 2	WETLAND	200	200								0.04		
4	A	5A	611.05	611.06	U	N/A	I A 2, II C 2	UPLAND	55		55							0.01		
4	A	5A	611.06	611.10	PFO4/SS4B	DEPRESSIONAL	I A 2, II C 2	WETLAND	194	194								0.04		
4	A	5A	611.10	611.14	U	N/A	I A 2, II C 2	UPLAND	203		203							0.04		
4	A	5A	611.14	611.16	PFO4/SS4B	DEPRESSIONAL	I A 2, II C 2	WETLAND	102	102								0.02		
4	A	5A	611.16	611.38	U	N/A	I A 2, II C 2	UPLAND	1205		1205							0.23		
4	A	5A	611.38	611.45	PFO4/SS1B	SLOPE	I A 2, II C 2	WETLAND	365	365								0.07		
4	A	5A	611.45	611.47	U	N/A	I C 2, II B 2	UPLAND	95		95							0.02		
4	A	5A	611.47	611.48	PFO4/SS1B	SLOPE	I A 2, II C 2	WETLAND	36	36								0.01		
4	A	5A	611.48	611.49	U	N/A	I C 2, II B 2	UPLAND	67		67							0.01		
4	A	5A	611.49	611.50	PFO4/SS1B	SLOPE	I A 2, II C 2	WETLAND	24	24								0.00		

SPREAD	SECTION	ROW MODE	FROM MP	TO MP	NWI CODE	HGM CLASS	VIERECK	DESCRIPTION	LINEAR FEET	WETLAND FEET	UPLAND FEET	DISTURBED FEET	Comments	Mode 1 - Ice Workpad (miles)	Mode 2 - Frost Pack (miles)	Mode 3 - Timber Mats	Mode 4 - Granular Workpad	Mode 5A - Grade	Mode 5B - Mountain Grade	Stream & Flood Plain Crossings
4	A	5A	611.50	611.51	U	N/A	I A 2, II B 2	UPLAND	94		94							0.02		
4	A	5A	611.51	611.54	PFO4/SS1B	SLOPE	I A 2, II C 2	WETLAND	147	147								0.03		
4	A	5A	611.54	611.56	PSS1/4B	SLOPE	I A 3, II C 2	WETLAND	84	84								0.02		
4	A	5A	611.56	611.57	PSS1/EM1B	SLOPE	II C 2, III A 3	WETLAND	88	88								0.02		
4	A	5A	611.57	611.62	PFO4/SS1B	SLOPE	I A 2, II C 2	WETLAND	224	224								0.04		
4	A	5A	611.62	611.62	PSS1/EM1B	SLOPE	II C 2, III A 3	WETLAND	34	34								0.01		
4	A	5A	611.62	611.63	U	N/A	I C 2, II B 2	UPLAND	28		28							0.01		
4	A	5A	611.63	611.68	PFO4/SS1B	SLOPE	I A 2, II C 2	WETLAND	283	283								0.05		
4	A	5A	611.68	611.69	U	N/A	I A 2, II C 2	UPLAND	23		23							0.00		
4	A	5A	611.69	611.69	U	N/A	II A 3, II B 2	UPLAND	27		27							0.01		
4	A	5A	611.69	611.70	U	N/A	I A 2, II C 2	UPLAND	38		38							0.01		
4	A	5A	611.70	611.70	U	N/A	II A 3, II B 2	UPLAND	28		28							0.01		
4	A	5A	611.70	611.72	U	N/A	I A 2, II C 2	UPLAND	68		68							0.01		
4	A	5A	611.72	611.74	U	N/A	II A 3, II B 2	UPLAND	122		122							0.02		
4	A	5A	611.74	611.74	U	N/A	I A 2, II C 2	UPLAND	3		3							0.00		
4	A	5A	611.74	611.76	U	N/A	II A 3, II B 2	UPLAND	97		97							0.02		
4	A	5A	611.76	611.89	U	N/A	I A 2, II C 2	UPLAND	693		693							0.13		
4	A	5A	611.89	611.90	U	N/A	II C 2	UPLAND	29		29							0.01		
4	A	5A	611.90	612.28	U	N/A	I A 2, II C 2	UPLAND	2044		2044							0.39		
4	A	5A	612.28	612.29	PSS1/EM1B	DEPRESSIONAL	II B 2, III A 2	WETLAND	46	46								0.01		
4	A	5A	612.29	612.39	U	N/A	I A 2, II C 2	UPLAND	525		525							0.10		
4	A	5A	612.39	612.41	PSS1A	RIVERINE	II B 2, II C 2	WETLAND	91	91								0.02		
4	A	5A	612.41	612.41	R3UBH	RIVERINE	NONE	WETLAND	6	6								0.00		
4	A	WB-S	612.41	612.41	R3UBH	RIVERINE	NONE	WETLAND	21	21										0.00
4	A	WB-S	612.41	612.42	U	N/A	I C 2, II B 2	UPLAND	39		39									0.01
4	A	5A	612.42	612.44	U	N/A	I C 2, II B 2	UPLAND	129		129							0.02		
4	A	5A	612.44	612.45	D	N/A	NONE	DISTURBED	11			11						0.00		
4	A	5A	612.45	612.46	U	N/A	I C 2, II B 2	UPLAND	58		58							0.01		
4	A	5A	612.46	612.46	D	N/A	NONE	DISTURBED	35			35						0.01		
4	A	5A	612.46	612.56	U	N/A	I C 2, II B 2	UPLAND	532		532							0.10		
4	A	5A	612.56	612.58	D	N/A	NONE	DISTURBED	80			80						0.02		
4	A	5A	612.58	612.63	U	N/A	I A 2, II C 2	UPLAND	259		259							0.05		
4	A	5A	612.63	612.68	U	N/A	I C 2, II C 2	UPLAND	275		275							0.05		
4	A	5A	612.68	612.69	U	N/A	I A 2, II C 2	UPLAND	53		53							0.01		
4	A	5A	612.69	612.72	U	N/A	I C 2, II C 2	UPLAND	128		128							0.02		
4	A	5A	612.72	612.73	U	N/A	I A 2, II C 2	UPLAND	61		61							0.01		
4	A	5A	612.73	612.80	U	N/A	I C 3, II C 2	UPLAND	410		410							0.08		
4	A	5A	612.80	612.82	U	N/A	I C 2, II C 2	UPLAND	87		87							0.02		
4	A	5A	612.82	612.84	PFO4/SS1B	SLOPE	I A 2, II C 2	WETLAND	115	115								0.02		
4	A	5A	612.84	612.88	U	N/A	I A 2, II C 2	UPLAND	218		218							0.04		
4	A	5A	612.88	613.02	U	N/A	I C 2, II C 2	UPLAND	721		721							0.14		
4	A	5A	613.02	613.02	PSS1/FO4B	SLOPE	II B 2, I A 3	WETLAND	19	19								0.00		
4	A	5A	613.02	613.09	U	N/A	I C 2, II C 2	UPLAND	340		340							0.06		
4	A	5A	613.09	613.09	PSS1/FO4B	SLOPE	II B 2, I A 3	WETLAND	18	18								0.00		
4	A	5A	613.09	613.43	U	N/A	I C 2, II B 2	UPLAND	1782		1782							0.34		
4	A	5A	613.43	613.43	PSS1B	SLOPE	II B 1	WETLAND	9	9								0.00		
4	A	5A	613.43	613.50	U	N/A	I C 2, II B 2	UPLAND	339		339							0.06		
4	A	5A	613.50	613.51	PSS1B	SLOPE	II B 1	WETLAND	81	81								0.02		
4	A	5A	613.51	613.72	U	N/A	I C 2, II B 2	UPLAND	1091		1091							0.21		
4	A	5A	613.72	613.79	PSS4/1B	SLOPE	II A 2, II C 2	WETLAND	398	398								0.08		
4	A	5A	613.79	614.54	U	N/A	I C 2, II B 2	UPLAND	3919		3919							0.74		
4	A	5A	614.54	614.59	U	N/A	II B 1, I C 3	UPLAND	316		316							0.06		
4	A	5A	614.59	614.60	R3UB/USH	RIVERINE	NONE	WETLAND	6	6								0.00		
4	A	WB-S	614.60	614.60	R3UB/USH	RIVERINE	NONE	WETLAND	38	38										0.01
4	A	WB-S	614.60	614.61	U	N/A	I C 2, II B 2	UPLAND	53		53									0.01
4	A	5A	614.61	615.85	U	N/A	I C 2, II B 2	UPLAND	6508		6508							1.23		
4	A	5A	615.85	615.97	PFO4/SS1B	SLOPE	I A 2, II B 2	WETLAND	631	631								0.12		
4	A	5A	615.97	616.01	PEM1/SS1C	SLOPE	III A 2, II C 2	WETLAND	259	259								0.05		
4	A	5A	616.01	616.05	PFO4/SS1B	SLOPE	I A 2, II B 2	WETLAND	172	172								0.03		
4	A	5A	616.05	616.07	PEM1/SS1C	SLOPE	III A 2, II C 2	WETLAND	128	128								0.02		
4	A	5A	616.07	616.08	PFO4/SS1B	SLOPE	I A 2, II B 2	WETLAND	31	31								0.01		
4	A	5A	616.08	616.11	PEM1/SS1C	SLOPE	III A 2, II C 2	WETLAND	196	196								0.04		
4	A	5A	616.11	616.15	PEM1/SS4B	SLOPE	III A 2, I A 3	WETLAND	205	205								0.04		
4	A	5A	616.15	616.19	PFO4/SS1B	SLOPE	I A 2, II B 2	WETLAND	208	208								0.04		
4	A	5A	616.19	616.40	U	N/A	I C 2, II B 2	UPLAND	1095		1095							0.21		
4	A	5A	616.40	616.56	U	N/A	I C 2, II B 2	UPLAND	825		825							0.16		
4	A	WB-S	616.56	616.57	U	N/A	I C 2, II B 2	UPLAND	60		60									0.01
4	A	5A	616.57	616.69	U	N/A	I C 2, II B 2	UPLAND	659		659							0.12		
4	A	5A	616.69	616.69	PSS1B	SLOPE	II B 1	WETLAND	15	15								0.00		
4	A	5A	616.69	616.75	U	N/A	I C 2, II B 2	UPLAND	272		272							0.05		
4	A	5A	616.75	616.76	PSS1B	SLOPE	II B 1	WETLAND	59	59								0.01		
4	A	5A	616.76	616.82	PSS1/EM1B	SLOPE	II C 2, III A 3	WETLAND	308	308								0.06		

SPREAD	SECTION	ROW MODE	FROM MP	TO MP	NWI CODE	HGM CLASS	VIERECK	DESCRIPTION	LINEAR FEET	WETLAND FEET	UPLAND FEET	DISTURBED FEET	Comments	Mode 1 - Ice Workpad (miles)	Mode 2 - Frost Pack (miles)	Mode 3 - Timber Mats	Mode 4 - Granular Workpad	Mode 5A - Grade	Mode 5B - Mountain Grade	Stream & Flood Plain Crossings
4	A	5A	616.82	616.82	PSS1B	SLOPE	II B 1	WETLAND	35	35								0.01		
4	A	5A	616.82	616.82	PSS1/FO4B	SLOPE	I A 3, II B 1	WETLAND	6	6								0.00		
4	A	5A	616.82	616.83	U	N/A	I C 2, II B 2	UPLAND	25		25							0.00		
4	A	5A	616.83	616.87	PSS1/FO4B	SLOPE	I A 3, II B 1	WETLAND	235	235								0.04		
4	A	5A	616.87	618.11	U	N/A	I A 2, II B 2	UPLAND	6544		6544							1.24		
4	A	WB-S	618.11	618.11	U	N/A	I A 2, II B 2	UPLAND	10		10									0.00
4	A	WB-S	618.11	618.12	R3UBH	RIVERINE	NONE	WETLAND	29	29										0.01
4	A	WB-S	618.12	618.14	U	N/A	I C 2, II B 1	UPLAND	82		82									0.02
4	A	5A	618.14	619.21	U	N/A	I C 2, II B 1	UPLAND	5680		5680							1.08		
4	A	5A	619.21	619.21	PSS1B	SLOPE	II B 1	WETLAND	16	16								0.00		
4	A	5A	619.21	619.29	U	N/A	I C 2, II C 2	UPLAND	390		390							0.07		
4	A	5A	619.29	619.30	PSS1/EM1B	DEPRESSIONAL	II C 2, III A 2	WETLAND	73	73								0.01		
4	A	5A	619.30	619.31	PSS1/FO4B	DEPRESSIONAL	I A 3, II B 1	WETLAND	20	20								0.00		
4	A	5A	619.31	619.69	U	N/A	I C 3, II B 1	UPLAND	2049		2049							0.39		
4	A	5A	619.69	619.70	PSS1/FO4B	SLOPE	I A 3, II B 1	WETLAND	21	21								0.00		
4	A	5A	619.70	619.80	U	N/A	I C 3, II B 1	UPLAND	543		543							0.10		
4	A	5A	619.80	619.81	PSS1/FO4B	SLOPE	I A 3, II B 1	WETLAND	67	67								0.01		
4	A	5A	619.81	619.93	U	N/A	I C 3, II B 1	UPLAND	621		621							0.12		
4	A	5A	619.93	619.95	PSS1B	SLOPE	II B 1	WETLAND	77	77								0.01		
4	A	5A	619.95	621.33	U	N/A	I C 3, II B 1	UPLAND	7317		7317							1.39		
4	A	5A	621.33	621.34	PSS1B	SLOPE	II B 1	WETLAND	40	40								0.01		
4	A	5A	621.34	621.34	U	N/A	I C 3, II B 1	UPLAND	4		4							0.00		
4	A	WB-S	621.34	621.35	U	N/A	I C 3, II B 1	UPLAND	60		60									0.01
4	A	5A	621.35	621.41	U	N/A	I C 3, II B 1	UPLAND	340		340							0.06		
4	A	5A	621.41	621.42	PFO4/SS1B	SLOPE	I C 3, II B 1	WETLAND	45	45								0.01		
4	A	5A	621.42	621.44	PSS1/EM1B	DEPRESSIONAL	II C 2, III A 2	WETLAND	113	113								0.02		
4	A	5A	621.44	621.47	PFO4/SS1B	SLOPE	I C 3, II B 1	WETLAND	115	115								0.02		
4	A	5A	621.47	621.54	U	N/A	I C 3, II B 1	UPLAND	391		391							0.07		
4	A	5A	621.54	621.55	PSS1B	SLOPE	II B 1	WETLAND	35	35								0.01		
4	A	5A	621.55	621.66	U	N/A	I C 3, II B 1	UPLAND	572		572							0.11		
4	A	5A	621.66	621.66	PFO4/SS1B	SLOPE	I C 3, II B 1	WETLAND	16	16								0.00		
4	A	5A	621.66	621.69	PSS1/EM1B	DEPRESSIONAL	II C 2, III A 2	WETLAND	158	158								0.03		
4	A	5A	621.69	621.70	PFO4/SS1B	SLOPE	I C 3, II B 1	WETLAND	43	43								0.01		
4	A	5A	621.70	622.31	U	N/A	I C 3, II B 1	UPLAND	3218		3218							0.61		
4	A	5A	622.31	622.35	PFO4/SS1B	SLOPE	I A 3, II B 2	WETLAND	206	206								0.04		
4	A	5A	622.35	622.40	U	N/A	I C 3, II B 1	UPLAND	310		310							0.06		
4	A	5A	622.40	622.41	PFO4/SS1B	SLOPE	I A 3, II B 2	WETLAND	52	52								0.01		
4	A	5A	622.41	622.43	U	N/A	I C 2	UPLAND	75		75							0.01		
4	A	5A	622.43	622.43	PFO4/SS1B	SLOPE	I A 3, II B 2	WETLAND	29	29								0.01		
4	A	5A	622.43	622.46	U	N/A	I C 3, II B 1	UPLAND	159		159							0.03		
4	A	5A	622.46	622.55	PFO4/SS1B	SLOPE	I A 3, II B 2	WETLAND	478	478								0.09		
4	A	5A	622.55	622.61	PSS4/1B	DEPRESSIONAL	II A 2, II C 2	WETLAND	281	281								0.05		
4	A	5A	622.61	622.70	PFO4/SS1B	SLOPE	I A 3, II B 2	WETLAND	482	482								0.09		
4	A	5A	622.70	622.72	U	N/A	I C 2, II B 2	UPLAND	92		92							0.02		
4	A	5A	622.72	622.76	PFO4/SS1B	SLOPE	I A 3, II B 2	WETLAND	248	248								0.05		
4	A	5A	622.76	622.78	PSS1B	SLOPE	II B 1	WETLAND	87	87								0.02		
4	A	5A	622.78	622.80	PFO4/SS1B	SLOPE	I A 3, II B 2	WETLAND	126	126								0.02		
4	A	5A	622.80	622.81	PSS1B	SLOPE	II B 1	WETLAND	61	61								0.01		
4	A	5A	622.81	622.83	PSS1/4B	SLOPE	II A 3, II C 2	WETLAND	86	86								0.02		
4	A	5A	622.83	622.85	PEM1/SS1E	DEPRESSIONAL	III A 2, II C 2	WETLAND	90	90								0.02		
4	A	5A	622.85	622.89	PSS1/4B	SLOPE	II A 3, II C 2	WETLAND	212	212								0.04		
4	A	5A	622.89	622.91	PEM1/SS1E	DEPRESSIONAL	III A 2, II C 2	WETLAND	112	112								0.02		
4	A	5A	622.91	622.92	PSS4/1B	SLOPE	II A 2, II C 2	WETLAND	83	83								0.02		
4	A	5A	622.92	622.93	PSS1B	SLOPE	II B 1	WETLAND	13	13								0.00		
4	A	5A	622.93	622.96	PSS4/1B	SLOPE	II A 2, II C 2	WETLAND	152	152								0.03		
4	A	5A	622.96	622.96	PSS1B	SLOPE	II B 2	WETLAND	37	37								0.01		
4	A	5A	622.96	622.98	U	N/A	I C 2, II B 2	UPLAND	95		95							0.02		
4	A	5A	622.98	623.01	U	N/A	II B 1	UPLAND	148		148							0.03		
4	A	5A	623.01	623.02	PSS1B	SLOPE	II B 1	WETLAND	74	74								0.01		
4	A	5A	623.02	623.04	U	N/A	II B 1	UPLAND	76		76							0.01		
4	A	5A	623.04	623.07	PSS1B	SLOPE	II B 1	WETLAND	167	167								0.03		
4	A	5A	623.07	623.09	U	N/A	I C 2, II B 2	UPLAND	108		108							0.02		
4	A	5A	623.09	623.12	PFO4/SS1B	SLOPE	I C 2, II B 2	WETLAND	155	155								0.03		
4	A	5A	623.12	623.16	U	N/A	I C 3, II B 1	UPLAND	233		233							0.04		
4	A	5A	623.16	623.18	PFO4/SS1B	SLOPE	I C 2, II B 2	WETLAND	112	112								0.02		
4	A	5A	623.18	623.25	U	N/A	I C 2, II B 1	UPLAND	352		352							0.07		
4	A	5A	623.25	623.29	U	N/A	I C 3, II B 1	UPLAND	207		207							0.04		
4	A	5A	623.29	623.35	U	N/A	I C 2, II B 1	UPLAND	322		322							0.06		
4	A	5A	623.35	623.63	U	N/A	I C 3, II B 1	UPLAND	1454		1454							0.28		
4	A	5A	623.63	623.64	PSS1B	SLOPE	II B 1	WETLAND	62	62								0.01		
4	A	5A	623.64	623.88	U	N/A	I C 3, II B 1	UPLAND	1300		1300							0.25		
4	A	5A	623.88	623.95	PSS1B	SLOPE	II B 2	WETLAND	325	325								0.06		

SPREAD	SECTION	ROW MODE	FROM MP	TO MP	NWI CODE	HGM CLASS	VIERECK	DESCRIPTION	LINEAR FEET	WETLAND FEET	UPLAND FEET	DISTURBED FEET	Comments	Mode 1 - Ice Workpad (miles)	Mode 2 - Frost Pack (miles)	Mode 3 - Timber Mats	Mode 4 - Granular Workpad	Mode 5A - Grade	Mode 5B - Mountain Grade	Stream & Flood Plain Crossings
4	A	5A	623.95	624.00	U	N/A	I C 3, II B 1	UPLAND	303		303							0.06		
4	A	5A	624.00	624.03	PSS1B	SLOPE	II B 2	WETLAND	167	167								0.03		
4	A	5A	624.03	624.15	U	N/A	I C 2, II B 1	UPLAND	607		607							0.12		
4	A	5A	624.15	624.18	PSS1B	SLOPE	II B 1, I C 3	WETLAND	134	134								0.03		
4	A	5A	624.18	624.20	U	N/A	I C 2, II B 1	UPLAND	116		116							0.02		
4	A	5A	624.20	624.21	PFO4/SS1B	SLOPE	I C 3, II B 1	WETLAND	81	81								0.02		
4	A	5A	624.21	624.22	PFO4/SS1B	SLOPE	I C 2, II B 2	WETLAND	18	18								0.00		
4	A	5A	624.22	624.23	PFO4/SS1B	SLOPE	I C 3, II B 1	WETLAND	78	78								0.01		
4	A	5A	624.23	624.36	U	N/A	I C 3, II B 1	UPLAND	669		669							0.13		
4	A	5A	624.36	624.37	PSS1B	SLOPE	II B 1	WETLAND	43	43								0.01		
4	A	5A	624.37	624.38	U	N/A	I C 3, II B 1	UPLAND	57		57							0.01		
4	A	5A	624.38	624.39	PSS1B	SLOPE	II B 1	WETLAND	84	84								0.02		
4	A	5A	624.39	624.40	U	N/A	I C 3, II B 1	UPLAND	64		64							0.01		
4	A	5A	624.40	624.41	PSS1B	SLOPE	II B 1	WETLAND	44	44								0.01		
4	A	5A	624.41	624.42	PSS1/EM1B	DEPRESSIONAL	II C 2, III A 2	WETLAND	52	52								0.01		
4	A	5A	624.42	624.42	PFO4/SS1B	DEPRESSIONAL	I C 2, II B 2	WETLAND	10	10								0.00		
4	A	5A	624.42	624.44	PSS1B	SLOPE	II B 1	WETLAND	63	63								0.01		
4	A	5A	624.44	624.44	U	N/A	I C 3, II B 1	UPLAND	41		41							0.01		
4	A	5A	624.44	624.47	PSS1B	SLOPE	II B 1	WETLAND	150	150								0.03		
4	A	5A	624.47	624.49	U	N/A	I C 3, II B 1	UPLAND	93		93							0.02		
4	A	5A	624.49	624.53	PSS1B	SLOPE	II B 1	WETLAND	206	206								0.04		
4	A	5A	624.53	624.55	PFO4/1B	SLOPE	I C 3, II B 1	WETLAND	113	113								0.02		
4	A	5A	624.55	624.66	PSS1/EM1E	DEPRESSIONAL	II C 2, III A 2	WETLAND	570	570								0.11		
4	A	5A	624.66	624.68	PFO4/1B	SLOPE	I C 3, II B 1	WETLAND	96	96								0.02		
4	A	5A	624.68	624.78	U	N/A	I C 3, II B 1	UPLAND	520		520							0.10		
4	A	5A	624.78	624.81	PSS1/FO4B	SLOPE	I A 3, II B 1	WETLAND	161	161								0.03		
4	A	5A	624.81	624.99	U	N/A	I C 3, II B 1	UPLAND	976		976							0.18		
4	A	5A	624.99	625.01	PSS1/FO4B	DEPRESSIONAL	I A 3, II B 1	WETLAND	93	93								0.02		
4	A	5A	625.01	625.07	U	N/A	I C 3, II B 1	UPLAND	331		331							0.06		
4	A	5A	625.07	625.08	D	N/A	NONE	DISTURBED	57			57						0.01		
4	A	5A	625.08	625.18	U	N/A	II B 1	UPLAND	531		531							0.10		
4	A	5A	625.18	625.28	PSS1/FO4B	DEPRESSIONAL	I A 3, II B 2	WETLAND	494	494								0.09		
4	A	5A	625.28	625.30	U	N/A	II B 1	UPLAND	114		114							0.02		
4	A	5A	625.30	625.32	PSS1/FO4B	DEPRESSIONAL	I A 3, II B 2	WETLAND	97	97								0.02		
4	A	5A	625.32	625.33	U	N/A	II B 1	UPLAND	68		68							0.01		
4	A	5A	625.33	625.37	PSS1/FO4B	DEPRESSIONAL	I A 3, II B 2	WETLAND	197	197								0.04		
4	A	5A	625.37	627.86	U	N/A	II B 1	UPLAND	13146		13146							2.49		
4	A	5A	627.86	627.87	U	N/A	II B 1, I B 2	UPLAND	72		72							0.01		
4	A	5A	627.87	628.18	U	N/A	II B 1	UPLAND	1648		1648							0.31		
4	A	5A	628.18	628.29	U	N/A	I C 2, II B 1	UPLAND	570		570							0.11		
4	A	5A	628.29	628.29	PFO4/SS1B	DEPRESSIONAL	I A 2, II B 2	WETLAND	27	27								0.01		
4	A	5A	628.29	628.30	PEM1/SS1F	DEPRESSIONAL	III A 3, II C 2	WETLAND	23	23								0.00		
4	A	3	628.30	628.34	PEM1/SS1F	DEPRESSIONAL	III A 3, II C 2	WETLAND	200	200						0.04				
4	A	3	628.34	628.34	PSS1/4B	DEPRESSIONAL	II B 2, II A 2	WETLAND	10	10						0.00				
4	A	5A	628.34	628.34	PSS1/4B	DEPRESSIONAL	II B 2, II A 2	WETLAND	17	17								0.00		
4	A	5A	628.34	628.35	PFO4/SS1B	DEPRESSIONAL	I A 2, II B 2	WETLAND	22	22								0.00		
4	A	5A	628.35	628.46	U	N/A	I C 2, II B 1	UPLAND	599		599							0.11		
4	A	5A	628.46	628.47	PFO4/SS1B	DEPRESSIONAL	I A 2, II B 2	WETLAND	46	46								0.01		
4	A	5A	628.47	628.58	PSS1/4B	DEPRESSIONAL	II C 1, II A 2	WETLAND	588	588								0.11		
4	A	5A	628.58	628.58	PFO4/SS1B	DEPRESSIONAL	I A 2, II B 2	WETLAND	18	18								0.00		
4	A	5A	628.58	629.36	U	N/A	I C 2, II B 1	UPLAND	4084		4084							0.77		
4	A	5A	629.36	629.36	PEM1/SS1F	DEPRESSIONAL	III A 3, II C 2	WETLAND	35	35								0.01		
4	A	5A	629.36	630.04	U	N/A	I C 2, II B 1	UPLAND	3588		3588							0.68		
4	A	5A	630.04	630.07	PFO4/SS1B	FLAT - ORGANIC	I A 2, II B 2	WETLAND	145	145								0.03		
4	A	5A	630.07	630.14	PSS1/FO4B	DEPRESSIONAL	I A 3, II C 2	WETLAND	370	370								0.07		
4	A	5A	630.14	630.14	PFO4/SS1B	FLAT - ORGANIC	I A 2, II B 2	WETLAND	17	17								0.00		
4	A	5A	630.14	630.18	U	N/A	I C 2, II B 1	UPLAND	204		204							0.04		
4	A	5A	630.18	630.19	D	N/A	NONE	DISTURBED	57			57						0.01		
4	A	5A	630.19	630.22	U	N/A	I C 2, II B 1	UPLAND	127		127							0.02		
4	A	5A	630.22	630.40	U	N/A	I C 3, II B 1	UPLAND	944		944							0.18		
4	A	5A	630.40	630.74	U	N/A	I C 2, II B 1	UPLAND	1818		1818							0.34		
4	A	5A	630.74	631.08	U	N/A	I C 3, II B 1	UPLAND	1800		1800							0.34		
4	A	5A	631.08	631.10	U	N/A	I C 2, II B 1	UPLAND	95		95							0.02		
4	A	5A	631.10	631.15	U	N/A	I C 3, II B 1	UPLAND	271		271							0.05		
4	A	5A	631.15	631.58	U	N/A	I C 2, II B 1	UPLAND	2275		2275							0.43		
4	A	5A	631.58	631.59	PSS1B	DEPRESSIONAL	II C 1	WETLAND	34	34								0.01		
4	A	5A	631.59	631.62	U	N/A	I C 2, II B 1	UPLAND	194		194							0.04		
4	A	5A	631.62	631.63	D	N/A	NONE	DISTURBED	56			56						0.01		
4	A	5A	631.63	632.26	U	N/A	I C 3, II B 1	UPLAND	3329		3329							0.63		
4	A	5A	632.26	632.29	PSS1/EM1B	SLOPE	II C 2, III A 2	WETLAND	126	126								0.02		
4	A	5A	632.29	632.39	U	N/A	I C 3, II B 1	UPLAND	557		557							0.11		
4	A	5A	632.39	632.43	U	N/A	I C 2, II B 1	UPLAND	166		166							0.03		

SPREAD	SECTION	ROW MODE	FROM MP	TO MP	NWI CODE	HGM CLASS	VIERECK	DESCRIPTION	LINEAR FEET	WETLAND FEET	UPLAND FEET	DISTURBED FEET	Comments	Mode 1 - Ice Workpad (miles)	Mode 2 - Frost Pack (miles)	Mode 3 - Timber Mats	Mode 4 - Granular Workpad	Mode 5A - Grade	Mode 5B - Mountain Grade	Stream & Flood Plain Crossings
4	A	5A	632.43	632.45	U	N/A	I C 3, II B 1	UPLAND	131		131							0.02		
4	A	5A	632.45	632.57	U	N/A	I C 2, II B 1	UPLAND	625		625							0.12		
4	A	5A	632.57	632.59	U	N/A	I C 3, II B 1	UPLAND	89		89							0.02		
4	A	5A	632.59	632.74	U	N/A	I C 2, II B 1	UPLAND	791		791							0.15		
4	A	5A	632.74	632.76	U	N/A	I C 3, II B 1	UPLAND	136		136							0.03		
4	A	5A	632.76	632.78	U	N/A	I C 2, II B 1	UPLAND	119		119							0.02		
4	A	5A	632.78	632.86	U	N/A	I C 3, II B 1	UPLAND	398		398							0.08		
4	A	5A	632.86	632.93	U	N/A	I C 2, II B 1	UPLAND	383		383							0.07		
4	A	5A	632.93	632.94	PSS1B	SLOPE	II B 1	WETLAND	48	48								0.01		
4	A	5A	632.94	633.19	U	N/A	I C 2, II B 1	UPLAND	1340		1340							0.25		
4	A	5A	633.19	633.76	U	N/A	I C 3, II B 1	UPLAND	2975		2975							0.56		
4	A	5A	633.76	634.05	U	N/A	I C 2, II B 1	UPLAND	1544		1544							0.29		
4	A	5A	634.05	634.06	PSS1/FO1B	SLOPE	I B 3, II B 1	WETLAND	49	49								0.01		
4	A	5A	634.06	634.07	PSS1/EM1C	SLOPE	II C 2, III A 2	WETLAND	54	54								0.01		
4	A	5A	634.07	634.21	U	N/A	I C 2, II B 1	UPLAND	755		755							0.14		
4	A	WB-S	634.21	634.21	U	N/A	I C 2, II B 1	UPLAND	11		11									0.00
4	A	WB-S	634.21	634.22	R3UBH	RIVERINE	NONE	WETLAND	45	45										0.01
4	A	WB-S	634.22	634.23	U	N/A	I B 3, II B 1	UPLAND	34		34									0.01
4	A	5A	634.23	634.32	U	N/A	I B 3, II B 1	UPLAND	495		495							0.09		
4	A	5A	634.32	635.34	U	N/A	I C 3, II B 1	UPLAND	5393		5393							1.02		
4	A	5A	635.34	635.37	PSS1/EM1B	DEPRESSIONAL	II C 2, III A 2	WETLAND	110	110								0.02		
4	A	5A	635.37	636.58	U	N/A	I C 3, II B 1	UPLAND	6397		6397							1.21		
4	A	5A	636.58	636.58	D	N/A	NONE	DISTURBED	20			20						0.00		
4	A	5A	636.58	637.17	U	N/A	I C 3, II B 1	UPLAND	3089		3089							0.58		
4	A	5A	637.17	637.22	U	N/A	I C 2, II B 1	UPLAND	300		300							0.06		
4	A	5A	637.22	638.02	U	N/A	I C 2, II B 1	UPLAND	4234		4234							0.80		
4	A	WB-S	638.02	638.04	U	N/A	I C 2, II B 1	UPLAND	59		59									0.01
4	A	5A	638.04	638.26	U	N/A	I C 2, II B 1	UPLAND	1169		1169							0.22		
4	A	5A	638.26	638.26	U	N/A	I C 2, II B 1	UPLAND	14		14							0.00		
4	A	5A	638.26	638.26	PSS1B	DEPRESSIONAL	II B 1	WETLAND	8	8								0.00		
4	A	5A	638.26	638.29	PEM1F	DEPRESSIONAL	III A 3	WETLAND	155	155								0.03		
4	A	5A	638.29	638.30	PSS1B	DEPRESSIONAL	II B 1	WETLAND	50	50								0.01		
4	A	5A	638.30	638.30	U	N/A	I C 2, II B 1	UPLAND	17		17							0.00		
4	A	5A	638.30	638.44	U	N/A	I C 2, II B 1	UPLAND	748		748							0.14		
4	A	WB-S	638.44	638.46	U	N/A	I C 2, II B 1	UPLAND	60		60									0.01
4	A	5A	638.46	639.39	U	N/A	I C 2, II B 1	UPLAND	4920		4920							0.93		
4	A	5A	639.39	639.40	PSS1/FO4B	DEPRESSIONAL	II C 2, I A 3	WETLAND	40	40								0.01		
4	A	5A	639.40	640.45	U	N/A	I C 2, II B 1	UPLAND	5573		5573							1.06		
4	A	5A	640.45	640.46	D	N/A	NONE	DISTURBED	52			52						0.01		
4	A	5A	640.46	640.71	U	N/A	I C 2, II B 1	UPLAND	1305		1305							0.25		
4	A	5A	640.71	640.80	U	N/A	I B 1	UPLAND	499		499							0.09		
4	A	WB-S	640.80	640.82	U	N/A	I B 1	UPLAND	68		68									0.01
4	A	WB-S	640.82	640.82	R3UBH	RIVERINE	NONE	WETLAND	35	35										0.01
4	A	WB-S	640.82	640.82	R3USC	RIVERINE	NONE	WETLAND	3	3										0.00
4	A	WB-S	640.82	640.82	PSS1C	RIVERINE	II C 2	WETLAND	12	12										0.00
4	A	WB-S	640.82	640.83	R3USC	RIVERINE	NONE	WETLAND	42	42										0.01
4	A	WB-S	640.83	640.84	R3UBH	RIVERINE	NONE	WETLAND	60	60										0.01
4	A	WB-S	640.84	640.88	U	N/A	I B 1	UPLAND	200		200									0.04
4	A	5A	640.88	640.92	U	N/A	I B 1	UPLAND	191		191							0.04		
4	A	5A	640.92	640.92	PSS1C	RIVERINE	II B 1	WETLAND	15	15								0.00		
4	A	5A	640.92	640.94	U	N/A	II B 1	UPLAND	76		76							0.01		
4	A	5A	640.94	640.94	PSS1C	RIVERINE	II B 1	WETLAND	13	13								0.00		
4	A	5A	640.94	640.99	U	N/A	I B 1	UPLAND	299		299							0.06		
4	A	5A	640.99	641.00	U	N/A	II B 1	UPLAND	26		26							0.00		
4	A	5A	641.00	641.05	U	N/A	I B 1	UPLAND	263		263							0.05		
4	A	5A	641.05	641.05	U	N/A	II B 1	UPLAND	20		20							0.00		
4	A	5A	641.05	641.06	U	N/A	I B 1	UPLAND	55		55							0.01		
4	A	5A	641.06	641.62	U	N/A	I C 2	UPLAND	2912		2912							0.55		
4	A	WB-S	641.62	641.63	U	N/A	I C 2	UPLAND	75		75									0.01
4	A	WB-S	641.63	641.67	R2UBH	RIVERINE	NONE	WETLAND	234	234										0.04
4	A	WB-S	641.67	641.71	R2USC	RIVERINE	NONE	WETLAND	175	175										0.03
4	A	WB-S	641.71	641.75	R2UBH	RIVERINE	NONE	WETLAND	228	228										0.04
4	A	WB-S	641.75	641.83	R2USC	RIVERINE	NONE	WETLAND	429	429										0.08
4	A	WB-S	641.83	641.86	R2UBH	RIVERINE	NONE	WETLAND	143	143										0.03
4	A	WB-S	641.86	641.94	R2USC	RIVERINE	NONE	WETLAND	413	413										0.08
4	A	WB-S	641.94	641.96	R2UBH	RIVERINE	NONE	WETLAND	106	106										0.02
4	A	WB-S	641.96	642.00	U	N/A	I B 3, II B 1	UPLAND	237		237									0.04
4	A	5A	642.00	642.04	U	N/A	I B 3, II B 1	UPLAND	215		215							0.04		
4	A	5A	642.04	642.27	U	N/A	I C 2, II B 1	UPLAND	1228		1228							0.23		
4	A	5A	642.27	642.28	PFO1/4B	SLOPE	I C 2, II B 1	WETLAND	27	27								0.01		
4	A	4	642.28	642.34	PFO1/4B	SLOPE	I C 2, II B 1	WETLAND	309	309							0.06			
4	A	4	642.34	642.36	PSS1/EM1B	SLOPE	II B 2, III A 2	WETLAND	120	120							0.02			

SPREAD	SECTION	ROW MODE	FROM MP	TO MP	NWI CODE	HGM CLASS	VIERECK	DESCRIPTION	LINEAR FEET	WETLAND FEET	UPLAND FEET	DISTURBED FEET	Comments	Mode 1 - Ice Workpad (miles)	Mode 2 - Frost Pack (miles)	Mode 3 - Timber Mats	Mode 4 - Granular Workpad	Mode 5A - Grade	Mode 5B - Mountain Grade	Stream & Flood Plain Crossings
4	A	4	642.36	642.37	PSS4/1B	SLOPE	II A 2, II B 2	WETLAND	58	58							0.01			
4	A	4	642.37	642.42	PFO1/4B	SLOPE	I C 2, II B 1	WETLAND	247	247							0.05			
4	A	4	642.42	642.43	PSS1/EM1B	SLOPE	II B 2, III A 2	WETLAND	86	86							0.02			
4	A	4	642.43	642.56	PFO1/4B	SLOPE	I C 2, II B 1	WETLAND	651	651							0.12			
4	A	5A	642.56	642.57	PFO1/4B	SLOPE	I C 2, II B 1	WETLAND	86	86								0.02		
4	A	5A	642.57	642.67	U	N/A	I B 3, II B 1	UPLAND	515		515							0.10		
4	A	5A	642.67	642.68	PSS1/FO1B	SLOPE	I C 3, II B 1	WETLAND	46	46								0.01		
4	A	5A	642.68	642.76	U	N/A	I B 3, II B 1	UPLAND	433		433							0.08		
4	A	WB-S	642.76	642.78	U	N/A	I B 3, II B 1	UPLAND	66		66									0.01
4	A	WB-S	642.78	642.78	PSS1/FO1B	SLOPE	I C 3, II B 1	WETLAND	24	24										0.00
4	A	5A	642.78	642.79	PSS1/FO1B	SLOPE	I C 3, II B 1	WETLAND	67	67								0.01		
4	A	5A	642.79	642.80	U	N/A	I C 2, II B 1	UPLAND	22		22							0.00		
4	A	5A	642.80	644.16	U	N/A	I B 3, II B 1	UPLAND	7181		7181							1.36		
4	A	5A	644.16	644.17	U	N/A	I C 2, II B 1	UPLAND	81		81							0.02		
4	A	5A	644.17	644.19	PSS1B	SLOPE	II B 1	WETLAND	88	88								0.02		
4	A	5A	644.19	644.34	U	N/A	I C 2, II B 1	UPLAND	803		803							0.15		
4	A	5A	644.34	644.37	PFO4/1B	SLOPE	I C 2, II B 2	WETLAND	164	164								0.03		
4	A	5A	644.37	644.55	U	N/A	I C 2, II B 1	UPLAND	943		943							0.18		
4	A	5A	644.55	645.65	U	N/A	I B 3, II B 1	UPLAND	5794		5794							1.10		
4	A	5A	645.65	645.65	PFO1/4B	SLOPE	I C 2, II B 2	WETLAND	27	27								0.01		
4	A	5A	645.65	646.45	U	N/A	I B 3, II B 1	UPLAND	4194		4194							0.79		
4	A	5A	646.45	646.46	PSS1/FO1B	SLOPE	I C 3, II C 2	WETLAND	55	55								0.01		
4	A	5A	646.46	646.47	U	N/A	I B 3, II B 1	UPLAND	46		46							0.01		
4	A	5A	646.47	646.47	PEM1/SS1B	SLOPE	III A 3, II C 2	WETLAND	28	28								0.01		
4	A	5A	646.47	646.49	PSS1/FO4B	SLOPE	I A 3, II C 2	WETLAND	93	93								0.02		
4	A	5A	646.49	646.51	PEM1/SS1C	DEPRESSIONAL	III A 3, II C 2	WETLAND	120	120								0.02		
4	A	5A	646.51	646.55	PSS1/FO4B	FLAT - ORGANIC	I A 3, II C 2	WETLAND	208	208								0.04		
4	A	5A	646.55	646.78	U	N/A	I B 3, II B 1	UPLAND	1226		1226							0.23		
4	A	5A	646.78	646.81	PSS1/EM1B	DEPRESSIONAL	II C 2, III A 3	WETLAND	122	122								0.02		
4	A	5A	646.81	647.22	U	N/A	I B 3, II B 1	UPLAND	2159		2159							0.41		
4	A	5A	647.22	647.24	PEM1/SS1B	SLOPE	III A 2, II C 2	WETLAND	113	113								0.02		
4	A	5A	647.24	647.36	U	N/A	I C 3, II B 2	UPLAND	638		638							0.12		
4	A	5A	647.36	647.36	PEM1/FO1B	SLOPE	I C 3, II B 2	WETLAND	23	23								0.00		
4	A	5A	647.36	647.49	U	N/A	I C 3, II B 2	UPLAND	661		661							0.13		
4	A	5A	647.49	647.50	PFO4/SS1B	SLOPE	I A 3, II B 2	WETLAND	58	58								0.01		
4	A	5A	647.50	647.51	PEM1/SS1B	SLOPE	III A 3, II C 2	WETLAND	59	59								0.01		
4	A	5A	647.51	647.54	PFO4/SS1B	SLOPE	I A 3, II B 2	WETLAND	172	172								0.03		
4	A	5A	647.54	647.54	PEM1/SS1B	SLOPE	III A 3, II C 2	WETLAND	8	8								0.00		
4	A	5A	647.54	647.62	PFO4/SS1B	SLOPE	I A 3, II B 2	WETLAND	419	419								0.08		
4	A	5A	647.62	647.64	PFO4/SS1B	SLOPE	I A 3, II B 2	WETLAND	76	76								0.01		
4	A	5A	647.64	647.64	PSS1/EM1B	DEPRESSIONAL	II C 2, III A 2	WETLAND	6	6								0.00		
4	A	5A	647.64	647.85	U	N/A	I C 2, II B 2	UPLAND	1141		1141							0.22		
4	A	5A	647.85	647.88	PEM1/SS1C	DEPRESSIONAL	III A 2, II B 2	WETLAND	140	140								0.03		
4	A	5A	647.88	647.89	U	N/A	I C 2, II B 2	UPLAND	57		57							0.01		
4	A	5A	647.89	647.91	PEM1/SS1C	DEPRESSIONAL	III A 2, II B 2	WETLAND	72	72								0.01		
4	A	5A	647.91	647.92	U	N/A	I C 2, II B 2	UPLAND	52		52							0.01		
4	A	5A	647.92	647.92	PEM1/SS1C	DEPRESSIONAL	III A 2, II B 2	WETLAND	47	47								0.01		
4	A	5A	647.92	648.06	U	N/A	I C 2, II B 2	UPLAND	713		713							0.14		
4	A	5A	648.06	648.48	U	N/A	I C 2, II B 2	UPLAND	2244		2244							0.43		
4	A	5A	648.48	648.50	D	N/A	NONE	DISTURBED	107			107						0.02		
4	A	5A	648.50	648.70	U	N/A	I C 2, II B 2	UPLAND	1022		1022							0.19		
4	A	5A	648.70	648.72	PSS4B	DEPRESSIONAL	II B 2, I B 1	WETLAND	128	128								0.02		
4	A	5A	648.72	648.73	U	N/A	I C 2, II B 2	UPLAND	20		20							0.00		
4	A	5A	648.73	648.77	PSS4B	DEPRESSIONAL	II B 2, I B 1	WETLAND	237	237								0.04		
4	A	5A	648.77	650.22	U	N/A	I C 2, II B 2	UPLAND	7668		7668							1.45		
4	A	5A	650.22	650.23	D	N/A	NONE	DISTURBED	29			29						0.01		
4	A	5A	650.23	650.41	U	N/A	I C 2, II B 2	UPLAND	959		959							0.18		
4	A	5A	650.41	650.42	D	N/A	NONE	DISTURBED	30			30						0.01		
4	A	5A	650.42	650.75	U	N/A	I C 2, II B 2	UPLAND	1791		1791							0.34		
4	A	5A	650.75	650.76	PEM1/SS1Eb	RIVERINE	III A 2, II C 2	WETLAND	8	8								0.00		
4	A	WB-S	650.76	650.77	PEM1/SS1Eb	RIVERINE	III A 2, II C 2	WETLAND	60	60										0.01
4	A	5A	650.77	650.78	PEM1/SS1Eb	RIVERINE	III A 2, II C 2	WETLAND	48	48								0.01		
4	A	5A	650.78	650.86	U	N/A	I C 2, II B 2	UPLAND	424		424							0.08		
4	A	5A	650.86	650.88	D	N/A	NONE	DISTURBED	99			99						0.02		
4	A	5A	650.88	651.01	U	N/A	I C 2, II B 2	UPLAND	690		690							0.13		
4	A	5A	651.01	651.01	D	N/A	NONE	DISTURBED	22			22						0.00		
4	A	5A	651.01	651.05	U	N/A	I C 2, II B 2	UPLAND	203		203							0.04		
4	A	5A	651.05	651.07	D	N/A	NONE	DISTURBED	92			92						0.02		
4	A	5A	651.07	651.11	U	N/A	II B 1	UPLAND	220		220							0.04		
4	A	5A	651.11	651.14	U	N/A	I C 2, II C 2	UPLAND	165		165							0.03		
4	A	5A	651.14	651.16	PSS1/FO4B	SLOPE	I A 3, II C 2	WETLAND	109	109								0.02		
4	A	5A	651.16	651.25	U	N/A	I B 2, II C 2	UPLAND	474		474							0.09		

SPREAD	SECTION	ROW MODE	FROM MP	TO MP	NWI CODE	HGM CLASS	VIERECK	DESCRIPTION	LINEAR FEET	WETLAND FEET	UPLAND FEET	DISTURBED FEET	Comments	Mode 1 - Ice Workpad (miles)	Mode 2 - Frost Pack (miles)	Mode 3 - Timber Mats	Mode 4 - Granular Workpad	Mode 5A - Grade	Mode 5B - Mountain Grade	Stream & Flood Plain Crossings
4	A	5A	651.25	651.37	U	N/A	I C 2, II C 2	UPLAND	607		607							0.12		
4	A	5A	651.37	651.41	PEM1/SS1B	SLOPE	III A 2, II C 2	WETLAND	249	249								0.05		
4	A	5A	651.41	651.43	U	N/A	I B 2, II C 2	UPLAND	83		83							0.02		
4	A	5A	651.43	651.76	U	N/A	I C 2, II C 2	UPLAND	1733		1733							0.33		
4	A	5A	651.76	651.76	U	N/A	III A 2	UPLAND	37		37							0.01		
4	A	5A	651.76	651.83	U	N/A	I C 2, II C 2	UPLAND	335		335							0.06		
4	A	5A	651.83	651.83	U	N/A	III A 2, II B 2	UPLAND	31		31							0.01		
4	A	5A	651.83	652.03	U	N/A	I C 2, II C 2	UPLAND	1040		1040							0.20		
4	A	5A	652.03	652.03	PFO1/4B	SLOPE	I C 2, III A 2	WETLAND	23	23								0.00		
4	A	5A	652.03	652.13	U	N/A	I C 2, II C 2	UPLAND	499		499							0.09		
4	A	5A	652.13	652.13	U	N/A	III A 2	UPLAND	32		32							0.01		
4	A	5A	652.13	652.16	U	N/A	I C 2, II C 2	UPLAND	137		137							0.03		
4	A	5A	652.16	652.17	PEM1B	SLOPE	III A 2	WETLAND	47	47								0.01		
4	A	5A	652.17	652.18	U	N/A	I C 2, II C 2	UPLAND	63		63							0.01		
4	A	5A	652.18	652.20	PSS1/FO1B	SLOPE	I C 3, II B 2	WETLAND	77	77								0.01		
4	A	5A	652.20	652.20	PSS1/EM1C	SLOPE	II C 2, III A 2	WETLAND	18	18								0.00		
4	A	5A	652.20	652.22	PSS1/EM1C	SLOPE	II C 2, III A 2	WETLAND	91	91								0.02		
4	A	5A	652.22	652.23	PSS1/EM1C	SLOPE	II C 2, III A 2	WETLAND	89	89								0.02		
4	A	5A	652.23	652.25	PSS1/EM1C	SLOPE	II C 2, III A 2	WETLAND	78	78								0.01		
4	A	5A	652.25	652.25	PEM1/FO1B	SLOPE	I C 3, III A 2	WETLAND	31	31								0.01		
4	A	5A	652.25	652.27	U	N/A	I C 2, II C 2	UPLAND	62		62							0.01		
4	A	5A	652.27	652.28	PEM1/FO1B	SLOPE	I C 3, III A 2	WETLAND	66	66								0.01		
4	A	5A	652.28	653.04	U	N/A	I C 2, II C 2	UPLAND	4022		4022							0.76		
4	A	5A	653.04	653.05	PSS1/EM1C	RIVERINE	II C 1, III A 3	WETLAND	60	60								0.01		
4	A	WB-S	653.05	653.06	PSS1/EM1C	RIVERINE	II C 1, III A 3	WETLAND	49	49										0.01
4	A	WB-S	653.06	653.06	U	N/A	I C 2, II C 2	UPLAND	11		11									0.00
4	A	5A	653.06	653.18	U	N/A	I C 2, II C 2	UPLAND	623		623							0.12		
4	A	5A	653.18	653.24	D	N/A	NONE	DISTURBED	323			323						0.06		
4	A	5A	653.24	653.31	U	N/A	I C 2, II C 2	UPLAND	348		348							0.07		
4	A	5A	653.31	653.35	PEM1B	DEPRESSIONAL	III A 2	WETLAND	226	226								0.04		
4	A	5A	653.35	654.77	U	N/A	I C 2, II C 2	UPLAND	7492		7492							1.42		
4	A	5A	654.77	654.77	PFO4B	FLAT - ORGANIC	I A 2, II C 2	WETLAND	11	11								0.00		
4	A	5A	654.77	654.85	U	N/A	I C 2, II C 2	UPLAND	404		404							0.08		
4	A	5A	654.85	654.95	PFO4B	FLAT - ORGANIC	I A 2, II C 2	WETLAND	562	562								0.11		
4	A	3	654.95	654.96	PFO4B	FLAT - ORGANIC	I A 2, II C 2	WETLAND	6	6						0.00				
4	A	3	654.96	655.07	PSS1/EM1B	SLOPE	II C 2, III A 2	WETLAND	604	604						0.11				
4	A	5A	655.07	655.07	PSS1/EM1B	SLOPE	II C 2, III A 2	WETLAND	22	22								0.00		
4	A	5A	655.07	655.14	PFO4B	FLAT - ORGANIC	I A 2	WETLAND	346	346								0.07		
4	A	5A	655.14	655.15	PEM1C	RIVERINE	III A 3, III A 2	WETLAND	69	69								0.01		
4	A	5A	655.15	655.15	R3UBH	RIVERINE	NONE	WETLAND	2	2								0.00		
4	A	WB-S	655.15	655.16	R3UBH	RIVERINE	NONE	WETLAND	26	26										0.01
4	A	WB-S	655.16	655.16	PEM1C	RIVERINE	III A 3, III A 2	WETLAND	4	4										0.00
4	A	WB-S	655.16	655.16	U	N/A	I C 2, II B 2	UPLAND	29		29									0.01
4	A	5A	655.16	655.43	U	N/A	I C 2, II B 2	UPLAND	1408		1408							0.27		
4	A	5A	655.43	655.43	PFO1/4B	SLOPE	I C 2, II C 2	WETLAND	2	2								0.00		
4	A	5A	655.43	655.45	PFO1/4B	SLOPE	I C 2, II C 2	WETLAND	116	116								0.02		
4	A	5A	655.45	655.51	PFO4/SS4B	FLAT - ORGANIC	I A 2, II C 2	WETLAND	318	318								0.06		
4	A	5A	655.51	655.57	U	N/A	I C 2, II B 2	UPLAND	286		286							0.05		
4	A	5A	655.57	656.03	U	N/A	I C 2, II B 2	UPLAND	2427		2427							0.46		
4	A	5A	656.03	656.03	PEM1/FO1B	SLOPE	I B 3, III A 2	WETLAND	33	33								0.01		
4	A	5A	656.03	656.06	U	N/A	I C 2, II B 2	UPLAND	116		116							0.02		
4	A	5A	656.06	656.06	PEM1/FO1B	SLOPE	I B 3, III A 2	WETLAND	42	42								0.01		
4	A	5A	656.06	656.50	U	N/A	I C 2, II B 2	UPLAND	2274		2274							0.43		
4	A	5A	656.50	656.50	PEM1/FO1B	SLOPE	I B 3	WETLAND	38	38								0.01		
4	A	5A	656.50	656.61	U	N/A	I C 2, II C 2	UPLAND	595		595							0.11		
4	A	5A	656.61	656.62	PEM1/FO1B	SLOPE	I B 3	WETLAND	46	46								0.01		
4	A	5A	656.62	657.56	U	N/A	I C 2, II B 2	UPLAND	4958		4958							0.94		
4	A	5A	657.56	657.60	D	N/A	NONE	DISTURBED	181			181						0.03		
4	A	5A	657.60	658.27	U	N/A	I C 2, II B 2	UPLAND	3565		3565							0.68		
4	A	5A	658.27	658.27	PEM1C	RIVERINE	III A 2	WETLAND	2	2								0.00		
4	A	WB-S	658.27	658.28	PEM1C	RIVERINE	III A 2	WETLAND	60	60										0.01
4	A	5A	658.28	658.28	PEM1C	RIVERINE	III A 2	WETLAND	5	5								0.00		
4	A	5A	658.28	658.32	U	N/A	I C 2, II B 2	UPLAND	177		177							0.03		
4	A	5A	658.32	658.33	PFO1/SS1B	SLOPE	I C 2, II B 2	WETLAND	36	36								0.01		
4	A	5A	658.33	658.39	U	N/A	I C 2, II B 2	UPLAND	320		320							0.06		
4	A	5A	658.39	658.40	PFO1/SS1B	SLOPE	I C 2, II B 2	WETLAND	97	97								0.02		
4	A	5A	658.40	658.48	U	N/A	I C 2, II B 2	UPLAND	396		396							0.07		
4	A	5A	658.48	658.50	PFO1/SS1B	SLOPE	I C 2, II B 2	WETLAND	123	123								0.02		
4	A	5A	658.50	658.56	U	N/A	I C 2, II B 2	UPLAND	285		285							0.05		
4	A	5A	658.56	658.63	PFO1/SS1B	SLOPE	I C 2, II B 2	WETLAND	406	406								0.08		
4	A	5A	658.63	658.90	U	N/A	I C 2, II B 2	UPLAND	1431		1431							0.27		
4	A	5A	658.90	658.93	D	N/A	NONE	DISTURBED	157			157						0.03		

SPREAD	SECTION	ROW MODE	FROM MP	TO MP	NWI CODE	HGM CLASS	VIERECK	DESCRIPTION	LINEAR FEET	WETLAND FEET	UPLAND FEET	DISTURBED FEET	Comments	Mode 1 - Ice Workpad (miles)	Mode 2 - Frost Pack (miles)	Mode 3 - Timber Mats	Mode 4 - Granular Workpad	Mode 5A - Grade	Mode 5B - Mountain Grade	Stream & Flood Plain Crossings
4	A	5A	658.93	658.99	U	N/A	I C 2, II B 2	UPLAND	287		287							0.05		
4	A	WB-S	658.99	659.00	U	N/A	I C 2, II B 2	UPLAND	60		60									0.01
4	A	5A	659.00	659.11	U	N/A	I C 2, II B 2	UPLAND	578		578							0.11		
4	A	5A	659.11	659.12	PSS1/EM1C	SLOPE	II B 1, III A 2	WETLAND	52	52								0.01		
4	A	WB-S	659.12	659.13	PSS1/EM1C	SLOPE	II B 1, III A 2	WETLAND	60	60										0.01
4	A	5A	659.13	659.13	PSS1/EM1C	SLOPE	II B 1, III A 2	WETLAND	17	17								0.00		
4	A	5A	659.13	659.27	U	N/A	I C 2, II C 2	UPLAND	709		709							0.13		
4	A	5A	659.27	659.27	PEM1/FO1B	SLOPE	I C 2, II C 2	WETLAND	28	28								0.01		
4	A	5A	659.27	659.50	U	N/A	I C 2, II C 2	UPLAND	1184		1184							0.22		
4	A	5A	659.50	659.51	PFO4/1B	SLOPE	I C 2, II C 2	WETLAND	47	47								0.01		
4	A	5A	659.51	659.65	U	N/A	I C 2, II C 2	UPLAND	772		772							0.15		
4	A	5A	659.65	659.68	PFO4/1B	SLOPE	I C 2, II C 2	WETLAND	132	132								0.03		
4	A	5A	659.68	659.71	PSS4/FO4B	SLOPE	I A 2, II C 2	WETLAND	146	146								0.03		
4	A	5A	659.71	659.83	U	N/A	I C 2, II C 2	UPLAND	667		667							0.13		
4	A	5A	659.83	659.85	PFO1/4B	SLOPE	I C 2, II C 2	WETLAND	98	98								0.02		
4	A	5A	659.85	660.07	U	N/A	I C 2, II C 2	UPLAND	1150		1150							0.22		
4	A	WB-S	660.07	660.07	U	N/A	I C 2, II C 2	UPLAND	23		23									0.00
4	A	WB-S	660.07	660.08	PSS1B	RIVERINE	II B 2	WETLAND	51	51										0.01
4	A	WB-S	660.08	660.08	U	N/A	I C 2, II C 2	UPLAND	16		16									0.00
4	A	5A	660.08	660.15	U	N/A	I C 2, II C 2	UPLAND	361		361							0.07		
4	A	5A	660.15	660.16	PFO1/4B	SLOPE	I C 2, II C 2	WETLAND	29	29								0.01		
4	A	5A	660.16	660.18	PFO1/4B	SLOPE	I C 2, II C 2	WETLAND	122	122								0.02		
4	A	5A	660.18	660.23	PSS4/1B	SLOPE	II A 2, II C 2	WETLAND	238	238								0.04		
4	A	5A	660.23	660.23	PSS4/1B	SLOPE	II A 2, II C 2	WETLAND	8	8								0.00		
4	A	5A	660.23	660.29	U	N/A	I C 2, II C 2	UPLAND	322		322							0.06		
4	A	5A	660.29	660.30	PFO1/4B	SLOPE	I C 2, II C 2	WETLAND	45	45								0.01		
4	A	5A	660.30	660.60	U	N/A	I C 2, II C 2	UPLAND	1610		1610							0.31		
4	A	5A	660.60	660.61	PFO4/1B	SLOPE	I C 2, II C 2	WETLAND	24	24								0.00		
4	A	5A	660.61	660.68	U	N/A	I C 2, II C 2	UPLAND	360		360							0.07		
4	A	5A	660.68	660.68	U	N/A	I C 2, II C 2	UPLAND	15		15							0.00		
4	A	3	660.68	660.68	U	N/A	I C 2, II C 2	UPLAND	8		8					0.00				
4	A	3	660.68	660.70	PFO4B	FLAT - ORGANIC	I A 2, II A 2	WETLAND	125	125						0.02				
4	A	3	660.70	660.73	PSS1/EM1B	DEPRESSIONAL	II C 2, III A 2	WETLAND	146	146						0.03				
4	A	3	660.73	660.75	PFO4B	FLAT - ORGANIC	I A 2, II A 2	WETLAND	105	105						0.02				
4	A	3	660.75	660.76	PSS1/EM1B	DEPRESSIONAL	II C 2, III A 2	WETLAND	22	22						0.00				
4	A	3	660.76	660.78	PFO4B	FLAT - ORGANIC	I A 2, II A 2	WETLAND	122	122						0.02				
4	A	5A	660.78	660.80	PFO4B	FLAT - ORGANIC	I A 2, II A 2	WETLAND	95	95								0.02		
4	A	5A	660.80	660.82	U	N/A	I C 2, II C 2	UPLAND	113		113							0.02		
4	A	5A	660.82	661.04	U	N/A	I C 2, II C 2	UPLAND	1177		1177							0.22		
4	A	5A	661.04	661.05	PEM1B	DEPRESSIONAL	III A 2	WETLAND	42	42								0.01		
4	A	5A	661.05	661.16	U	N/A	I C 2, II C 2	UPLAND	599		599							0.11		
4	A	5A	661.16	661.17	PEM1B	SLOPE	III A 2	WETLAND	46	46								0.01		
4	A	5A	661.17	661.30	U	N/A	I C 2, II C 2	UPLAND	688		688							0.13		
4	A	5A	661.30	661.31	PSS1/FO1B	RIVERINE	I C 2, II C 2	WETLAND	29	29								0.01		
4	A	WB-S	661.31	661.32	PSS1/FO1B	RIVERINE	I C 2, II C 2	WETLAND	90	90										0.02
4	A	5A	661.32	661.33	PSS1/FO1B	RIVERINE	I C 2, II C 2	WETLAND	11	11								0.00		
4	A	5A	661.33	661.40	U	N/A	I C 2, II C 2	UPLAND	397		397							0.08		
4	A	5A	661.40	661.41	PSS1/FO1B	SLOPE	I C 2, II B 2	WETLAND	33	33								0.01		
4	A	5A	661.41	661.74	U	N/A	I C 2, II C 2	UPLAND	1749		1749							0.33		
4	A	5A	661.74	661.78	U	N/A	I C 2, II C 2	UPLAND	243		243							0.05		
4	A	5A	661.78	661.79	PSS4/FO4B	SLOPE	I A 2, II C 2	WETLAND	13	13								0.00		
4	A	3	661.79	661.80	PSS4/FO4B	SLOPE	I A 2, II C 2	WETLAND	57	57						0.01				
4	A	3	661.80	661.83	PSS1/EM1B	SLOPE	II C 2, III A 2	WETLAND	146	146						0.03				
4	A	3	661.83	661.83	PSS4/FO4B	SLOPE	I A 2, II C 2	WETLAND	8	8						0.00				
4	A	5A	661.83	661.90	PSS4/FO4B	SLOPE	I A 2, II C 2	WETLAND	363	363								0.07		
4	A	5A	661.90	661.92	U	N/A	I C 2, II C 2	UPLAND	129		129							0.02		
4	A	5A	661.92	662.53	U	N/A	I C 2, II C 2	UPLAND	3243		3243							0.61		
4	A	5A	662.53	662.58	PFO1/4B	SLOPE	I C 2, II C 2	WETLAND	259	259								0.05		
4	A	5A	662.58	662.75	U	N/A	I C 2, II C 2	UPLAND	905		905							0.17		
4	A	5A	662.75	662.76	PFO1/4B	SLOPE	I C 2, II C 2	WETLAND	23	23								0.00		
4	A	5A	662.76	662.81	U	N/A	I C 2, II C 2	UPLAND	276		276							0.05		
4	A	5A	662.81	662.82	PFO1/4B	SLOPE	I C 2, II C 2	WETLAND	52	52								0.01		
4	A	5A	662.82	662.84	PEM1/SS1E	SLOPE	III A 2, II D 2	WETLAND	108	108								0.02		
4	A	5A	662.84	662.85	PFO1/4B	SLOPE	I C 2, II C 2	WETLAND	50	50								0.01		
4	A	5A	662.85	663.10	U	N/A	I C 2, II C 2	UPLAND	1331		1331							0.25		
4	A	5A	663.10	663.12	PEM1/SS1E	SLOPE	III A 2, II D 2	WETLAND	95	95								0.02		
4	A	5A	663.12	663.47	U	N/A	I C 2, II C 2	UPLAND	1859		1859							0.35		
4	A	5A	663.47	663.48	U	N/A	I C 2, II C 2	UPLAND	36		36							0.01		
4	A	5A	663.48	663.54	PFO4/SS1B	FLAT - ORGANIC	I A 2, II C 2	WETLAND	325	325								0.06		
4	A	5A	663.54	663.63	U	N/A	I C 2, II C 2	UPLAND	473		473							0.09		
4	A	5A	663.63	663.66	PEM1E	RIVERINE	III A 2	WETLAND	175	175								0.03		
4	A	WB-S	663.66	663.67	PEM1E	RIVERINE	III A 2	WETLAND	24	24										0.00

SPREAD	SECTION	ROW MODE	FROM MP	TO MP	NWI CODE	HGM CLASS	VIERECK	DESCRIPTION	LINEAR FEET	WETLAND FEET	UPLAND FEET	DISTURBED FEET	Comments	Mode 1 - Ice Workpad (miles)	Mode 2 - Frost Pack (miles)	Mode 3 - Timber Mats	Mode 4 - Granular Workpad	Mode 5A - Grade	Mode 5B - Mountain Grade	Stream & Flood Plain Crossings
4	A	WB-S	663.67	663.68	R3UBH	RIVERINE	NONE	WETLAND	66	66										0.01
4	A	WB-S	663.68	663.69	PEM1E	RIVERINE	III A 2, II C 2	WETLAND	30	30										0.01
4	A	5A	663.69	663.69	PEM1E	RIVERINE	III A 2, II C 2	WETLAND	15	15								0.00		
4	A	5A	663.69	663.74	U	N/A	I C 2, II C 2	UPLAND	255		255							0.05		
4	A	5A	663.74	663.88	U	N/A	I C 2, II C 2	UPLAND	728		728							0.14		
4	A	5A	663.88	663.88	PEM1B	SLOPE	III A 2	WETLAND	20	20								0.00		
4	A	5A	663.88	663.90	PEM1E	DEPRESSIONAL	III A 2	WETLAND	125	125								0.02		
4	A	5A	663.90	663.91	PEM1B	SLOPE	III A 2	WETLAND	45	45								0.01		
4	A	5A	663.91	663.93	U	N/A	I C 2, II C 2	UPLAND	77		77							0.01		
4	A	5A	663.93	663.93	PFO1/4B	SLOPE	I C 2, II C 2	WETLAND	38	38								0.01		
4	A	5A	663.93	663.94	PEM1B	SLOPE	III A 2	WETLAND	34	34								0.01		
4	A	5A	663.94	664.69	U	N/A	I C 2, II C 2	UPLAND	3936		3936							0.75		
4	A	5A	664.69	664.70	D	N/A	NONE	DISTURBED	48			48						0.01		
4	A	5A	664.70	664.82	U	N/A	I B 2, II C 2	UPLAND	650		650							0.12		
4	A	5A	664.82	664.83	PEM1/SS1B	SLOPE	III A 2, II C 2	WETLAND	48	48								0.01		
4	A	5A	664.83	665.36	U	N/A	I B 2, II C 2	UPLAND	2834		2834							0.54		
4	A	5A	665.36	665.39	U	N/A	II B 2	UPLAND	150		150							0.03		
4	A	5A	665.39	665.42	U	N/A	I B 2, II C 2	UPLAND	171		171							0.03		
4	A	5A	665.42	665.53	U	N/A	I B 1	UPLAND	552		552							0.10		
4	A	5A	665.53	665.86	U	N/A	I B 2, II C 2	UPLAND	1732		1732							0.33		
4	B	5A	665.86	666.52	U	N/A	I B 2, II C 2	UPLAND	3504		3504							0.66		
4	B	5A	666.52	666.53	PSS1/EM1C	SLOPE	II C 2, III A 2	WETLAND	39	39								0.01		
4	B	5A	666.53	666.53	PEM1/SS1Cb	RIVERINE	III A 2, II B 2	WETLAND	27	27								0.01		
4	B	WB-W	666.53	666.55	PEM1/SS1Cb	RIVERINE	III A 2, II B 2	WETLAND	90	90										0.02
4	B	2	666.55	666.56	PEM1/SS1Cb	RIVERINE	III A 2, II B 2	WETLAND	66	66					0.01					
4	B	2	666.56	666.57	U	N/A	I C 2, II C 2	UPLAND	55		55				0.01					
4	B	5A	666.57	666.69	U	N/A	I C 2, II C 2	UPLAND	614		614							0.12		
4	B	5A	666.69	666.71	PFO1/4B	SLOPE	I C 2, II C 2	WETLAND	96	96								0.02		
4	B	5A	666.71	667.25	U	N/A	I C 2, II C 2	UPLAND	2838		2838							0.54		
4	B	5A	667.25	667.33	PFO1/SS1B	SLOPE	I B 2, II B 2	WETLAND	474	474								0.09		
4	B	5A	667.33	667.37	U	N/A	I C 2, II C 2	UPLAND	179		179							0.03		
4	B	5A	667.37	667.38	PFO1/SS1B	SLOPE	I B 2, II B 2	WETLAND	45	45								0.01		
4	B	5A	667.38	667.38	PEM1/SS1C	SLOPE	III A 3, II C 2	WETLAND	35	35								0.01		
4	B	5A	667.38	667.47	U	N/A	I C 2, II C 2	UPLAND	469		469							0.09		
4	B	5A	667.47	667.49	PFO1/4B	SLOPE	I C 2, II B 2	WETLAND	94	94								0.02		
4	B	5A	667.49	667.52	U	N/A	I C 2, II C 2	UPLAND	171		171							0.03		
4	B	5A	667.52	667.54	PFO1/4B	SLOPE	I C 2, II B 2	WETLAND	67	67								0.01		
4	B	2	667.54	667.54	PFO1/4B	SLOPE	I C 2, II B 2	WETLAND	20	20					0.00					
4	B	2	667.54	667.55	PEM1C	SLOPE	III A 2	WETLAND	34	34					0.01					
4	B	2	667.55	667.55	PEM1F	SLOPE	III A 3	WETLAND	47	47					0.01					
4	B	2	667.55	667.58	PEM1C	SLOPE	III A 2	WETLAND	127	127					0.02					
4	B	2	667.58	667.62	PEM1F	SLOPE	III A 3	WETLAND	204	204					0.04					
4	B	2	667.62	667.62	PEM1C	SLOPE	III A 2	WETLAND	33	33					0.01					
4	B	5A	667.62	667.63	PEM1C	SLOPE	III A 2	WETLAND	10	10								0.00		
4	B	5A	667.63	667.63	PFO1/4B	SLOPE	I C 2, II B 2	WETLAND	48	48								0.01		
4	B	5A	667.63	667.68	U	N/A	I C 2, II C 2	UPLAND	217		217							0.04		
4	B	5A	667.68	667.69	PFO1/4B	SLOPE	I C 2, II B 2	WETLAND	55	55								0.01		
4	B	5A	667.69	667.70	U	N/A	I C 2, II C 2	UPLAND	64		64							0.01		
4	B	5A	667.70	667.71	PFO1/4B	SLOPE	I C 2, II B 2	WETLAND	58	58								0.01		
4	B	5A	667.71	667.72	PEM1B	DEPRESSIONAL	III A 2	WETLAND	60	60								0.01		
4	B	2	667.72	667.73	PEM1B	DEPRESSIONAL	III A 2	WETLAND	64	64					0.01					
4	B	2	667.73	667.74	PFO1/4B	SLOPE	I C 2, II B 2	WETLAND	43	43					0.01					
4	B	2	667.74	667.77	U	N/A	I C 2, II C 2	UPLAND	162		162				0.03					
4	B	5A	667.77	667.77	U	N/A	I C 2, II C 2	UPLAND	14		14							0.00		
4	B	5A	667.77	667.79	PFO1/4B	SLOPE	I C 2, II B 2	WETLAND	101	101								0.02		
4	B	5A	667.79	668.12	U	N/A	I C 2, II C 2	UPLAND	1705		1705							0.32		
4	B	5A	668.12	668.15	PFO1/4B	SLOPE	I C 2, II C 2	WETLAND	154	154								0.03		
4	B	5A	668.15	668.19	U	N/A	I C 2, II C 2	UPLAND	260		260							0.05		
4	B	5A	668.19	668.20	PSS1/FO4C	SLOPE	I A 3, II C 2	WETLAND	51	51								0.01		
4	B	5A	668.20	668.23	U	N/A	I C 2, II C 2	UPLAND	117		117							0.02		
4	B	5A	668.23	668.24	PSS1/FO4C	SLOPE	I A 3, II C 2	WETLAND	68	68								0.01		
4	B	5A	668.24	668.24	PEM1Cb	RIVERINE	III A 3, III A 2	WETLAND	19	19								0.00		
4	B	WB-W	668.24	668.25	PEM1Cb	RIVERINE	III A 3, III A 2	WETLAND	57	57										0.01
4	B	WB-W	668.25	668.26	PFO1/4B	SLOPE	I C 2, II C 2	WETLAND	31	31										0.01
4	B	WB-W	668.26	668.26	U	N/A	I C 2, II C 2	UPLAND	2		2									0.00
4	B	2	668.26	668.29	U	N/A	I C 2, II C 2	UPLAND	163		163				0.03					
4	B	2	668.29	668.33	PFO4B	FLAT - ORGANIC	I A 2	WETLAND	215	215					0.04					
4	B	2	668.33	668.40	U	N/A	I C 2, II C 2	UPLAND	341		341				0.06					
4	B	2	668.40	668.45	PEM1B	DEPRESSIONAL	III A 2	WETLAND	285	285					0.05					
4	B	2	668.45	668.46	U	N/A	I C 2, II C 2	UPLAND	46		46				0.01					
4	B	5A	668.46	669.93	U	N/A	I C 2, II C 2	UPLAND	7761		7761							1.47		
4	B	5A	669.93	669.94	PFO1/4B	SLOPE	I C 2, II C 2	WETLAND	38	38								0.01		

SPREAD	SECTION	ROW MODE	FROM MP	TO MP	NWI CODE	HGM CLASS	VIERECK	DESCRIPTION	LINEAR FEET	WETLAND FEET	UPLAND FEET	DISTURBED FEET	Comments	Mode 1 - Ice Workpad (miles)	Mode 2 - Frost Pack (miles)	Mode 3 - Timber Mats	Mode 4 - Granular Workpad	Mode 5A - Grade	Mode 5B - Mountain Grade	Stream & Flood Plain Crossings
4	B	2	669.94	669.94	PFO1/4B	SLOPE	I C 2, II C 2	WETLAND	42	42					0.01					
4	B	2	669.94	669.99	PSS1C	RIVERINE	II C 1, II A 2	WETLAND	229	229					0.04					
4	B	WB-W	669.99	670.00	PSS1C	RIVERINE	II C 1, II A 2	WETLAND	60	60										0.01
4	B	2	670.00	670.04	PSS1C	RIVERINE	II C 1, II A 2	WETLAND	198	198					0.04					
4	B	2	670.04	670.06	PSS4/1B	FLAT - ORGANIC	II A 2, II B 2	WETLAND	142	142					0.03					
4	B	2	670.06	670.09	U	N/A	I C 2, II C 2	UPLAND	143		143				0.03					
4	B	2	670.09	670.10	PSS4/1B	FLAT - ORGANIC	II A 2, II B 2	WETLAND	27	27					0.01					
4	B	WB-W	670.10	670.10	PSS4/1B	FLAT - ORGANIC	II A 2, II B 2	WETLAND	23	23										0.00
4	B	WB-W	670.10	670.11	PEM1/SS1C	RIVERINE	III A 3, II C 2	WETLAND	37	37										0.01
4	B	WB-W	670.11	670.11	PSS4/1B	FLAT - ORGANIC	II A 2, II B 2	WETLAND	30	30										0.01
4	B	2	670.11	670.12	PSS4/1B	FLAT - ORGANIC	II A 2, II B 2	WETLAND	34	34					0.01					
4	B	2	670.12	670.25	U	N/A	I C 1, II C 2	UPLAND	690		690				0.13					
4	B	2	670.25	670.26	PSS4/1B	FLAT - ORGANIC	II A 2, II B 2	WETLAND	30	30					0.01					
4	B	2	670.26	670.27	U	N/A	I C 1, II C 2	UPLAND	71		71				0.01					
4	B	2	670.27	670.33	PSS4/1B	FLAT - ORGANIC	II A 2, II B 2	WETLAND	342	342					0.06					
4	B	2	670.33	670.40	PSS1/EM1B	SLOPE	II C 2, III A 2	WETLAND	325	325					0.06					
4	B	2	670.40	670.52	PSS4/1B	FLAT - ORGANIC	II A 2, II B 2	WETLAND	665	665					0.13					
4	B	2	670.52	670.58	U	N/A	I C 1, II C 2	UPLAND	291		291				0.06					
4	B	2	670.58	670.62	PSS4/1B	FLAT - ORGANIC	II A 2, II B 2	WETLAND	208	208					0.04					
4	B	2	670.62	670.62	PSS1/EM1B	SLOPE	II C 2, III A 2	WETLAND	38	38					0.01					
4	B	2	670.62	670.69	PEM1/SS1B	SLOPE	III A 2, II C 2	WETLAND	375	375					0.07					
4	B	2	670.69	670.74	PSS1/4B	SLOPE	II C 2, II A 3	WETLAND	269	269					0.05					
4	B	2	670.74	670.76	PEM1E	SLOPE	III A 3	WETLAND	92	92					0.02					
4	B	2	670.76	670.82	U	N/A	I C 1, II C 2	UPLAND	290		290				0.06					
4	B	5A	670.82	671.48	U	N/A	I C 1, II C 2	UPLAND	3489		3489							0.66		
4	B	5A	671.48	671.52	PSS4/1B	FLAT - ORGANIC	II A 3, II C 2	WETLAND	201	201								0.04		
4	B	2	671.52	671.54	PSS4/1B	FLAT - ORGANIC	II A 3, II C 2	WETLAND	112	112					0.02					
4	B	2	671.54	671.58	PEM1/SS1E	SLOPE	III A 3, II C 2	WETLAND	228	228					0.04					
4	B	2	671.58	671.64	PSS4/1B	FLAT - ORGANIC	II A 3, II C 2	WETLAND	294	294					0.06					
4	B	5A	671.64	672.22	U	N/A	II C 2, III A 2	UPLAND	3103		3103							0.59		
4	B	5A	672.22	672.26	U	N/A	I C 1, II C 2	UPLAND	195		195							0.04		
4	B	2	672.26	672.28	PSS1/EM1C	RIVERINE	II C 2, III A 2	WETLAND	118	118					0.02					
4	B	WB-W	672.28	672.30	PSS1/EM1C	RIVERINE	II C 2, III A 2	WETLAND	90	90										0.02
4	B	2	672.30	672.34	PSS1/EM1C	RIVERINE	II C 2, III A 2	WETLAND	209	209					0.04					
4	B	5A	672.34	672.36	U	N/A	I C 2, II C 2	UPLAND	124		124							0.02		
4	B	5A	672.36	672.55	U	N/A	II C 2, III A 2	UPLAND	979		979							0.19		
4	B	5A	672.55	672.61	PSS1/FO1B	SLOPE	I B 3, II B 2	WETLAND	307	307								0.06		
4	B	5A	672.61	672.64	PEM1E	DEPRESSIONAL	III A 3	WETLAND	177	177								0.03		
4	B	5A	672.64	672.64	PFO1/SS1B	DEPRESSIONAL	I B 2, II B 2	WETLAND	17	17								0.00		
4	B	5A	672.64	672.69	U	N/A	I B 2, II C 2	UPLAND	221		221							0.04		
4	B	5A	672.69	672.69	U	N/A	II C 2, III A 2	UPLAND	22		22							0.00		
4	B	5A	672.69	673.28	U	N/A	I B 2, II C 2	UPLAND	3128		3128							0.59		
4	B	5A	673.28	673.37	U	N/A	I C 2, II C 2	UPLAND	485		485							0.09		
4	B	WB-W	673.37	673.39	U	N/A	I C 2, II C 2	UPLAND	90		90									0.02
4	B	5A	673.39	673.60	U	N/A	I C 2, II C 2	UPLAND	1110		1110							0.21		
4	B	2	673.60	673.62	U	N/A	I C 2, II C 2	UPLAND	82		82				0.02					
4	B	2	673.62	673.81	PSS1/4B	FLAT - ORGANIC	I A 3, II A 2	WETLAND	1027	1027					0.19					
4	B	2	673.81	673.87	PFO1/4B	FLAT - ORGANIC	I C 2, II C 2	WETLAND	300	300					0.06					
4	B	5A	673.87	673.87	PFO1/4B	FLAT - ORGANIC	I C 2, II C 2	WETLAND	5	5								0.00		
4	B	5A	673.87	674.09	U	N/A	I C 2, II C 2	UPLAND	1165		1165							0.22		
4	B	2	674.09	674.12	U	N/A	I C 2, II C 2	UPLAND	167		167				0.03					
4	B	2	674.12	674.16	PFO1/4B	FLAT - ORGANIC	I C 2, II C 2	WETLAND	179	179					0.03					
4	B	2	674.16	674.24	PSS1/4B	FLAT - ORGANIC	I A 3, II A 2	WETLAND	458	458					0.09					
4	B	2	674.24	674.33	PFO1/4B	FLAT - ORGANIC	I C 2, II C 2	WETLAND	490	490					0.09					
4	B	2	674.33	674.47	U	N/A	I C 2, II C 2	UPLAND	729		729				0.14					
4	B	2	674.47	674.50	PSS1/4B	FLAT - ORGANIC	I A 3, II A 2	WETLAND	121	121					0.02					
4	B	2	674.50	674.51	U	N/A	I C 2, II C 2	UPLAND	76		76				0.01					
4	B	5A	674.51	674.52	U	N/A	I C 2, II C 2	UPLAND	76		76							0.01		
4	B	5A	674.52	674.53	PFO1/4B	SLOPE	I C 2, II C 2	WETLAND	31	31								0.01		
4	B	5A	674.53	675.18	U	N/A	I B 2, II B 2	UPLAND	3445		3445							0.65		
4	B	5A	675.18	675.22	PSS1/FO1B	SLOPE	I B 2, II B 2	WETLAND	192	192								0.04		
4	B	5A	675.22	675.42	U	N/A	I B 2, II B 2	UPLAND	1086		1086							0.21		
4	B	5A	675.42	675.45	PFO1/4B	FLAT - ORGANIC	I C 2, II C 2	WETLAND	120	120								0.02		
4	B	2	675.45	675.46	PFO1/4B	FLAT - ORGANIC	I C 2, II C 2	WETLAND	81	81					0.02					
4	B	2	675.46	675.49	PFO4/SS4B	FLAT - ORGANIC	I A 2, II A 2	WETLAND	127	127					0.02					
4	B	2	675.49	675.52	PFO1/4B	FLAT - ORGANIC	I C 2, II C 2	WETLAND	173	173					0.03					
4	B	2	675.52	675.54	PFO4/SS4B	FLAT - ORGANIC	I A 2, II A 2	WETLAND	128	128					0.02					
4	B	2	675.54	675.59	PSS1/EM1C	DEPRESSIONAL	II C 2, III A 2	WETLAND	241	241					0.05					
4	B	5A	675.59	675.60	PSS1/EM1C	DEPRESSIONAL	II C 2, III A 2	WETLAND	29	29								0.01		
4	B	5A	675.60	675.60	PSS1/4B	SLOPE	I A 3, II C 2	WETLAND	47	47								0.01		
4	B	5A	675.60	675.66	PFO4/1B	SLOPE	I C 2, II A 2	WETLAND	277	277								0.05		
4	B	5A	675.66	675.66	PSS1/4B	SLOPE	I A 3, II C 2	WETLAND	26	26								0.00		

SPREAD	SECTION	ROW MODE	FROM MP	TO MP	NWI CODE	HGM CLASS	VIERECK	DESCRIPTION	LINEAR FEET	WETLAND FEET	UPLAND FEET	DISTURBED FEET	Comments	Mode 1 - Ice Workpad (miles)	Mode 2 - Frost Pack (miles)	Mode 3 - Timber Mats	Mode 4 - Granular Workpad	Mode 5A - Grade	Mode 5B - Mountain Grade	Stream & Flood Plain Crossings
4	B	5A	675.66	675.67	PSS1/4B	SLOPE	II A 3, II A 2	WETLAND	49	49								0.01		
4	B	5A	675.67	675.71	PFO4/SS4B	FLAT - ORGANIC	I A 2, II A 2	WETLAND	213	213								0.04		
4	B	5A	675.71	675.75	PSS1/EM1C	DEPRESSIONAL	II C 2, III A 2	WETLAND	180	180								0.03		
4	B	5A	675.75	675.78	PFO4/SS4B	FLAT - ORGANIC	I A 2, II A 2	WETLAND	162	162								0.03		
4	B	5A	675.78	675.79	PFO4/SS4B	FLAT - ORGANIC	I A 2, II A 2	WETLAND	98	98								0.02		
4	B	5A	675.79	675.82	U	N/A	I C 2, II C 2	UPLAND	132		132							0.03		
4	B	5A	675.82	675.83	PFO1/4B	SLOPE	I C 2, II C 2	WETLAND	54	54								0.01		
4	B	5A	675.83	675.87	PSS1/FO1B	FLAT - ORGANIC	I C 3, II B 2	WETLAND	233	233								0.04		
4	B	5A	675.87	675.90	U	N/A	I B 2	UPLAND	124		124							0.02		
4	B	5A	675.90	675.90	PFO1/4B	FLAT - ORGANIC	I C 2, II B 2	WETLAND	25	25								0.00		
4	B	5A	675.90	675.93	U	N/A	I B 2	UPLAND	140		140							0.03		
4	B	5A	675.93	675.96	PFO1/4B	FLAT - ORGANIC	I C 2, II B 2	WETLAND	172	172								0.03		
4	B	5A	675.96	676.01	PFO4/SS4B	FLAT - ORGANIC	I A 2, II A 2	WETLAND	237	237								0.04		
4	B	5A	676.01	676.03	PSS1/EM1B	SLOPE	II C 2, III A 2	WETLAND	132	132								0.02		
4	B	5A	676.03	676.04	PFO4/SS4B	FLAT - ORGANIC	I A 2, II A 2	WETLAND	67	67								0.01		
4	B	5A	676.04	676.05	PFO1/4B	FLAT - ORGANIC	I C 2, II C 2	WETLAND	44	44								0.01		
4	B	5A	676.05	676.36	U	N/A	I C 2, II C 2	UPLAND	1623		1623							0.31		
4	B	5A	676.36	676.36	PFO1/4B	FLAT - ORGANIC	I C 2, II C 2	WETLAND	15	15								0.00		
4	B	2	676.36	676.38	PFO1/4B	FLAT - ORGANIC	I C 2, II C 2	WETLAND	70	70					0.01					
4	B	2	676.38	676.42	PFO4/SS4B	FLAT - ORGANIC	I A 2, II A 2	WETLAND	258	258					0.05					
4	B	2	676.42	676.43	PFO4/SS4B	FLAT - ORGANIC	I A 2, II A 2	WETLAND	23	23					0.00					
4	B	2	676.43	676.45	PSS1/EM1E	SLOPE	II C 2, III A 3	WETLAND	89	89					0.02					
4	B	2	676.45	676.46	PSS1/4B	FLAT - ORGANIC	II A 3, II C 2	WETLAND	61	61					0.01					
4	B	2	676.46	676.47	PFO4/SS4B	FLAT - ORGANIC	I A 2, II A 2	WETLAND	87	87					0.02					
4	B	2	676.47	676.55	U	N/A	I C 1	UPLAND	402		402				0.08					
4	B	5A	676.55	676.69	U	N/A	I C 1	UPLAND	715		715							0.14		
4	B	5A	676.69	676.69	PEM1/SS1B	SLOPE	III A 2, II B 2	WETLAND	20	20								0.00		
4	B	5A	676.69	676.70	PEM1/SS1C	RIVERINE	III A 2, II B 2	WETLAND	55	55								0.01		
4	B	5A	676.70	677.59	U	N/A	I C 2, II C 2	UPLAND	4710		4710							0.89		
4	B	5A	677.59	677.60	PFO1/4B	FLAT - ORGANIC	I C 2, II C 2	WETLAND	40	40								0.01		
4	B	2	677.60	677.66	PSS4/FO4B	FLAT - ORGANIC	II A 2, I A 2	WETLAND	298	298					0.06					
4	B	2	677.66	677.73	PSS1/EM1B	SLOPE	II C 2, III A 2	WETLAND	395	395					0.07					
4	B	2	677.73	677.75	PSS4/FO4B	FLAT - ORGANIC	II A 2, I A 2	WETLAND	124	124					0.02					
4	B	5A	677.75	677.77	PSS4/FO4B	FLAT - ORGANIC	II A 2, I A 2	WETLAND	66	66								0.01		
4	B	5A	677.77	677.91	U	N/A	I C 1	UPLAND	741		741							0.14		
4	B	2	677.91	677.97	PSS4/FO4B	FLAT - ORGANIC	II A 2, I A 2	WETLAND	317	317					0.06					
4	B	5A	677.97	678.05	U	N/A	I C 1	UPLAND	444		444							0.08		
4	B	5A	678.05	678.05	PSS4/FO4B	FLAT - ORGANIC	II A 2, I A 2	WETLAND	6	6								0.00		
4	B	2	678.05	678.07	PSS4/FO4B	FLAT - ORGANIC	II A 2, I A 2	WETLAND	75	75					0.01					
4	B	2	678.07	678.07	PEM1/SS1F	SLOPE	III A 3, II C 2	WETLAND	34	34					0.01					
4	B	WB-W	678.07	678.08	PEM1/SS1F	SLOPE	III A 3, II C 2	WETLAND	59	59										0.01
4	B	WB-W	678.08	678.08	PFO4/SS1B	FLAT - ORGANIC	I A 2, II B 2	WETLAND	1	1										0.00
4	B	2	678.08	678.09	PFO4/SS1B	FLAT - ORGANIC	I A 2, II B 2	WETLAND	16	16					0.00					
4	B	2	678.09	678.11	U	N/A	I B 2	UPLAND	104		104				0.02					
4	B	5A	678.11	678.17	U	N/A	I B 2	UPLAND	348		348							0.07		
4	B	5A	678.17	678.18	PFO4/SS1B	FLAT - ORGANIC	I A 2, II B 2	WETLAND	36	36								0.01		
4	B	2	678.18	678.20	PFO4/SS1B	FLAT - ORGANIC	I A 2, II B 2	WETLAND	114	114					0.02					
4	B	2	678.20	678.27	U	N/A	I C 2	UPLAND	361		361				0.07					
4	B	2	678.27	678.32	PFO4/SS1B	FLAT - ORGANIC	I A 2, II B 2	WETLAND	282	282					0.05					
4	B	5A	678.32	678.43	U	N/A	I C 2	UPLAND	569		569							0.11		
4	B	2	678.43	678.45	U	N/A	I C 2	UPLAND	122		122				0.02					
4	B	2	678.45	678.47	PSS4/FO4B	FLAT - ORGANIC	I A 2, II C 2	WETLAND	91	91					0.02					
4	B	2	678.47	678.48	PSS1/EM1E	RIVERINE	II C 2, III A 3	WETLAND	27	27					0.01					
4	B	WB-W	678.48	678.49	PSS1/EM1E	RIVERINE	II C 2, III A 3	WETLAND	90	90										0.02
4	B	2	678.49	678.50	PSS1/EM1E	RIVERINE	II C 2, III A 3	WETLAND	39	39					0.01					
4	B	2	678.50	678.51	PSS1/EM1B	SLOPE	II C 2, III A 2	WETLAND	66	66					0.01					
4	B	2	678.51	678.53	PSS4/FO4B	FLAT - ORGANIC	I A 2, II C 2	WETLAND	72	72					0.01					
4	B	2	678.53	678.54	U	N/A	I A 2	UPLAND	64		64				0.01					
4	B	2	678.54	678.59	U	N/A	I B 2	UPLAND	282		282				0.05					
4	B	2	678.59	678.60	U	N/A	I A 2	UPLAND	42		42				0.01					
4	B	2	678.60	678.62	PSS4/FO4B	FLAT - ORGANIC	I A 2, II C 2	WETLAND	102	102					0.02					
4	B	2	678.62	678.65	PSS1/EM1B	SLOPE	II C 2, III A 2	WETLAND	160	160					0.03					
4	B	2	678.65	678.74	PSS4/FO4B	FLAT - ORGANIC	I A 2, II C 2	WETLAND	479	479					0.09					
4	B	2	678.74	678.78	U	N/A	I C 1	UPLAND	194		194				0.04					
4	B	5A	678.78	678.89	U	N/A	I C 1	UPLAND	600		600							0.11		
4	B	2	678.89	678.94	U	N/A	I C 1	UPLAND	267		267				0.05					
4	B	2	678.94	678.95	PSS4/FO4B	FLAT - ORGANIC	I A 2, II C 2	WETLAND	20	20					0.00					
4	B	2	678.95	679.00	U	N/A	I C 1	UPLAND	282		282				0.05					
4	B	5A	679.00	679.42	U	N/A	I C 1	UPLAND	2202		2202							0.42		
4	B	2	679.42	679.45	U	N/A	I C 1	UPLAND	164		164				0.03					
4	B	2	679.45	679.47	PSS4/FO4B	FLAT - ORGANIC	II A 2, I A 2	WETLAND	106	106					0.02					
4	B	2	679.47	679.49	PSS4/FO4B	SLOPE	II A 2, I A 2	WETLAND	136	136					0.03					

SPREAD	SECTION	ROW MODE	FROM MP	TO MP	NWI CODE	HGM CLASS	VIERECK	DESCRIPTION	LINEAR FEET	WETLAND FEET	UPLAND FEET	DISTURBED FEET	Comments	Mode 1 - Ice Workpad (miles)	Mode 2 - Frost Pack (miles)	Mode 3 - Timber Mats	Mode 4 - Granular Workpad	Mode 5A - Grade	Mode 5B - Mountain Grade	Stream & Flood Plain Crossings
4	B	2	679.49	679.52	PSS1/EM1E	SLOPE	II C 2, III A 2	WETLAND	121	121					0.02					
4	B	2	679.52	679.57	PSS4/FO4B	FLAT - ORGANIC	II A 2, I A 2	WETLAND	290	290					0.05					
4	B	2	679.57	679.58	U	N/A	I C 1	UPLAND	41		41				0.01					
4	B	5A	679.58	679.89	U	N/A	I C 1	UPLAND	1650		1650							0.31		
4	B	2	679.89	679.92	U	N/A	I C 1	UPLAND	160		160				0.03					
4	B	2	679.92	679.96	PSS4/FO4B	FLAT - ORGANIC	II A 2, I A 2	WETLAND	189	189					0.04					
4	B	2	679.96	679.99	PEM1/SS1F	SLOPE	III A 3, II C 2	WETLAND	187	187					0.04					
4	B	2	679.99	680.01	PFO4/SS1B	FLAT - ORGANIC	I A 2, II B 2	WETLAND	90	90					0.02					
4	B	5A	680.01	680.12	U	N/A	I C 1	UPLAND	575		575							0.11		
4	B	2	680.12	680.14	U	N/A	I C 1	UPLAND	141		141				0.03					
4	B	2	680.14	680.17	PFO4/SS1B	FLAT - ORGANIC	I A 2, II B 2	WETLAND	132	132					0.03					
4	B	2	680.17	680.19	PSS1/4B	SLOPE	II A 3, II C 2	WETLAND	111	111					0.02					
4	B	2	680.19	680.20	U	N/A	I C 1	UPLAND	36		36				0.01					
4	B	5A	680.20	680.66	U	N/A	I C 1	UPLAND	2460		2460							0.47		
4	B	2	680.66	680.66	U	N/A	I C 1	UPLAND	1		1				0.00					
4	B	2	680.66	680.67	PFO4/SS1B	FLAT - ORGANIC	I A 2, II B 2	WETLAND	45	45					0.01					
4	B	2	680.67	680.70	PEM1/SS1F	SLOPE	III A 3, II C 2	WETLAND	168	168					0.03					
4	B	2	680.70	680.71	U	N/A	I C 3, II C 2	UPLAND	56		56				0.01					
4	B	5A	680.71	680.81	U	N/A	I C 3, II C 2	UPLAND	510		510							0.10		
4	B	2	680.81	680.87	U	N/A	I C 3, II C 2	UPLAND	301		301				0.06					
4	B	2	680.87	680.93	PFO4/SS1B	FLAT - ORGANIC	I A 2, II C 2	WETLAND	329	329					0.06					
4	B	5A	680.93	680.93	PFO4/SS1B	FLAT - ORGANIC	I A 2, II C 2	WETLAND	6	6								0.00		
4	B	5A	680.93	681.56	U	N/A	I C 1	UPLAND	3324		3324							0.63		
4	B	2	681.56	681.62	U	N/A	I C 1	UPLAND	330		330				0.06					
4	B	2	681.62	681.63	PFO4/SS4B	FLAT - ORGANIC	I A 2, II C 2	WETLAND	29	29					0.01					
4	B	2	681.63	681.64	PSS1/4B	FLAT - ORGANIC	II A 2, II C 2	WETLAND	42	42					0.01					
4	B	2	681.64	681.64	PSS1/EM1B	SLOPE	II C 2, III A 2	WETLAND	23	23					0.00					
4	B	2	681.64	681.65	PEM1/SS1F	SLOPE	III A 3, II C 2	WETLAND	25	25					0.00					
4	B	WB-W	681.65	681.66	PEM1/SS1F	SLOPE	III A 3, II C 2	WETLAND	90	90										0.02
4	B	2	681.66	681.67	PEM1/SS1F	SLOPE	III A 3, II C 2	WETLAND	17	17					0.00					
4	B	2	681.67	681.70	PSS4/FO4B	SLOPE	II A 2, I A 2	WETLAND	164	164					0.03					
4	B	2	681.70	681.73	PFO4/SS4B	FLAT - ORGANIC	I A 2, II A 2	WETLAND	184	184					0.03					
4	B	2	681.73	681.74	U	N/A	I C 1	UPLAND	56		56				0.01					
4	B	5A	681.74	682.11	U	N/A	I C 1	UPLAND	1948		1948							0.37		
4	B	5A	682.11	682.12	PSS1C	RIVERINE	II C 2	WETLAND	62	62								0.01		
4	B	WB-W	682.12	682.13	PSS1C	RIVERINE	II C 2	WETLAND	60	60										0.01
4	B	5A	682.13	682.14	PSS1C	RIVERINE	II C 2	WETLAND	25	25								0.00		
4	B	5A	682.14	682.28	U	N/A	I C 1	UPLAND	755		755							0.14		
4	B	2	682.28	682.32	U	N/A	I C 1	UPLAND	190		190				0.04					
4	B	2	682.32	682.37	U	N/A	I A 2, II B 1	UPLAND	250		250				0.05					
4	B	2	682.37	682.39	PSS4/FO4B	SLOPE	II A 2, I A 2	WETLAND	149	149					0.03					
4	B	2	682.39	682.40	PSS1/EM1B	SLOPE	II C 2, III A 2	WETLAND	45	45					0.01					
4	B	2	682.40	682.43	PSS4/FO4B	SLOPE	II A 2, I A 2	WETLAND	130	130					0.02					
4	B	2	682.43	682.43	PFO4/SS4B	FLAT - ORGANIC	I A 2, II A 2	WETLAND	16	16					0.00					
4	B	5A	682.43	682.49	PFO4/SS4B	FLAT - ORGANIC	I A 2, II A 2	WETLAND	310	310								0.06		
4	B	5A	682.49	682.50	U	N/A	I A 2	UPLAND	77		77							0.01		
4	B	5A	682.50	682.51	PFO4/SS4B	FLAT - ORGANIC	I A 2, II A 2	WETLAND	44	44								0.01		
4	B	5A	682.51	682.55	PSS4/FO4B	SLOPE	II A 2, I A 2	WETLAND	179	179								0.03		
4	B	5A	682.55	682.58	PFO4/SS4B	FLAT - ORGANIC	I A 2, II A 2	WETLAND	189	189								0.04		
4	B	5A	682.58	682.59	U	N/A	I A 2	UPLAND	68		68							0.01		
4	B	5A	682.59	682.62	PFO4/SS4B	FLAT - ORGANIC	I A 2, II A 2	WETLAND	133	133								0.03		
4	B	2	682.62	682.63	PSS1/EM1B	SLOPE	II C 2, III A 2	WETLAND	35	35					0.01					
4	B	2	682.63	682.65	PEM1/SS1F	SLOPE	III A 3, II C 2	WETLAND	98	98					0.02					
4	B	2	682.65	682.65	PSS1/EM1B	SLOPE	II C 2, III A 2	WETLAND	29	29					0.01					
4	B	2	682.65	682.69	PSS4/FO4B	FLAT - ORGANIC	II A 2, I A 2	WETLAND	225	225					0.04					
4	B	2	682.69	682.74	PSS1/EM1B	SLOPE	II C 2, III A 2	WETLAND	241	241					0.05					
4	B	2	682.74	682.75	PSS4/FO4B	FLAT - ORGANIC	II A 2, I A 2	WETLAND	52	52					0.01					
4	B	2	682.75	682.77	U	N/A	I C 1	UPLAND	117		117				0.02					
4	B	2	682.77	682.79	PSS4/FO4B	FLAT - ORGANIC	II A 2, I A 2	WETLAND	117	117					0.02					
4	B	2	682.79	682.80	PSS1/EM1B	SLOPE	II C 2, III A 2	WETLAND	40	40					0.01					
4	B	2	682.80	682.83	PFO4/SS4B	FLAT - ORGANIC	I A 2, II A 2	WETLAND	139	139					0.03					
4	B	2	682.83	682.90	U	N/A	I C 1	UPLAND	367		367				0.07					
4	B	2	682.90	682.94	PSS4/FO4B	SLOPE	II A 2, I A 2	WETLAND	225	225					0.04					
4	B	2	682.94	682.95	PSS1/4B	SLOPE	II A 3, II C 2	WETLAND	59	59					0.01					
4	B	2	682.95	683.06	PFO4/SS4B	FLAT - ORGANIC	I A 2, II A 2	WETLAND	568	568					0.11					
4	B	2	683.06	683.07	PSS4/FO4B	SLOPE	II A 2, I A 2	WETLAND	66	66					0.01					
4	B	2	683.07	683.08	PFO4/SS4B	FLAT - ORGANIC	I A 2, II A 2	WETLAND	40	40					0.01					
4	B	2	683.08	683.17	U	N/A	I C 2	UPLAND	510		510				0.10					
4	B	2	683.17	683.21	PFO4/SS4B	FLAT - ORGANIC	I A 2, II A 2	WETLAND	204	204					0.04					
4	B	2	683.21	683.23	PSS1/EM1B	SLOPE	II C 2, III A 2	WETLAND	85	85					0.02					
4	B	2	683.23	683.24	PSS1/4B	FLAT - ORGANIC	II A 3, II C 2	WETLAND	54	54					0.01					
4	B	2	683.24	683.28	PSS4/FO4B	FLAT - ORGANIC	II A 2, I A 2	WETLAND	222	222					0.04					

SPREAD	SECTION	ROW MODE	FROM MP	TO MP	NWI CODE	HGM CLASS	VIERECK	DESCRIPTION	LINEAR FEET	WETLAND FEET	UPLAND FEET	DISTURBED FEET	Comments	Mode 1 - Ice Workpad (miles)	Mode 2 - Frost Pack (miles)	Mode 3 - Timber Mats	Mode 4 - Granular Workpad	Mode 5A - Grade	Mode 5B - Mountain Grade	Stream & Flood Plain Crossings
4	B	2	683.28	683.31	U	N/A	I B 2, II C 2	UPLAND	127		127				0.02					
4	B	5A	683.31	683.55	U	N/A	I B 2, II C 2	UPLAND	1290		1290							0.24		
4	B	2	683.55	683.56	U	N/A	I B 2, II C 2	UPLAND	49		49				0.01					
4	B	2	683.56	683.60	PSS4/FO4B	FLAT - ORGANIC	II A 2, I A 2	WETLAND	192	192					0.04					
4	B	2	683.60	683.64	PSS4/1B	FLAT - ORGANIC	II A 2, II B 2	WETLAND	230	230					0.04					
4	B	2	683.64	683.66	PSS4/FO4B	FLAT - ORGANIC	II A 2, I A 2	WETLAND	131	131					0.02					
4	B	2	683.66	683.72	U	N/A	I C 1	UPLAND	320		320				0.06					
4	B	2	683.72	683.73	PSS4/FO4B	FLAT - ORGANIC	II A 2, I A 2	WETLAND	43	43					0.01					
4	B	2	683.73	683.74	PSS1C	RIVERINE	II C 2	WETLAND	38	38					0.01					
4	B	2	683.74	683.74	PSS4/FO4B	FLAT - ORGANIC	II A 2, I A 2	WETLAND	18	18					0.00					
4	B	5A	683.74	683.75	PSS4/FO4B	FLAT - ORGANIC	II A 2, I A 2	WETLAND	41	41								0.01		
4	B	5A	683.75	683.90	U	N/A	I C 1	UPLAND	807		807							0.15		
4	B	5A	683.90	683.92	PFO1/4B	SLOPE	I C 2, II C 2	WETLAND	106	106								0.02		
4	B	5A	683.92	683.95	U	N/A	I C 1	UPLAND	136		136							0.03		
4	B	5A	683.95	683.95	PFO1/4B	SLOPE	I C 2, II C 2	WETLAND	18	18								0.00		
4	B	5A	683.95	683.96	PSS4/FO4B	SLOPE	II A 2, I A 2	WETLAND	49	49								0.01		
4	B	5A	683.96	683.99	U	N/A	I C 2	UPLAND	130		130							0.02		
4	B	5A	683.99	684.00	PFO1/4B	SLOPE	I C 2, II C 2	WETLAND	91	91								0.02		
4	B	5A	684.00	684.03	U	N/A	I C 2	UPLAND	122		122							0.02		
4	B	2	684.03	684.03	U	N/A	I C 2	UPLAND	19		19				0.00					
4	B	2	684.03	684.04	PFO1/4B	SLOPE	I C 2, II C 2	WETLAND	42	42					0.01					
4	B	2	684.04	684.05	PFO1/4C	SLOPE	I C 2, II C 2	WETLAND	64	64					0.01					
4	B	2	684.05	684.09	PSS4/FO4B	FLAT - ORGANIC	II A 2, I A 2	WETLAND	225	225					0.04					
4	B	2	684.09	684.13	PFO1/4B	SLOPE	I C 2, II C 2	WETLAND	194	194					0.04					
4	B	2	684.13	684.14	PSS1/4C	SLOPE	II B 2, I C 3	WETLAND	32	32					0.01					
4	B	2	684.14	684.19	PSS4/FO4B	FLAT - ORGANIC	II A 2, I A 2	WETLAND	278	278					0.05					
4	B	5A	684.19	684.19	PSS4/FO4B	FLAT - ORGANIC	II A 2, I A 2	WETLAND	21	21								0.00		
4	B	5A	684.19	684.39	U	N/A	I C 1	UPLAND	1051		1051							0.20		
4	B	5A	684.39	684.40	PSS4/FO4B	FLAT - ORGANIC	II A 2, I A 2	WETLAND	52	52								0.01		
4	B	5A	684.40	684.41	PSS4/FO4B	SLOPE	II A 2, I A 2	WETLAND	64	64								0.01		
4	B	5A	684.41	684.67	U	N/A	I B 2, II B 2	UPLAND	1370		1370							0.26		
4	B	5A	684.67	684.69	PFO1/4B	SLOPE	I C 2, II B 2	WETLAND	84	84								0.02		
4	B	5A	684.69	684.77	U	N/A	I B 2, II B 2	UPLAND	438		438							0.08		
4	B	5A	684.77	684.79	PFO1/4B	SLOPE	I C 2, II B 2	WETLAND	80	80								0.02		
4	B	5A	684.79	684.83	U	N/A	I B 2, II B 2	UPLAND	218		218							0.04		
4	B	2	684.83	684.84	U	N/A	I B 2, II B 2	UPLAND	60		60				0.01					
4	B	2	684.84	684.84	PFO1/4B	SLOPE	I C 2, II B 2	WETLAND	21	21					0.00					
4	B	2	684.84	684.85	PFO1/4B	SLOPE	I C 2, II B 2	WETLAND	23	23					0.00					
4	B	2	684.85	684.86	PSS4/FO4B	SLOPE	II A 2, I A 2	WETLAND	66	66					0.01					
4	B	2	684.86	684.91	PSS1/EM1C	SLOPE	II C 2, III A 3	WETLAND	252	252					0.05					
4	B	2	684.91	684.97	PEM1/SS1F	SLOPE	III A 3, II C 2	WETLAND	306	306					0.06					
4	B	2	684.97	684.99	PSS1/EM1C	SLOPE	II C 2, III A 3	WETLAND	153	153					0.03					
4	B	2	684.99	685.00	PFO4/SS1B	SLOPE	I A 2	WETLAND	46	46					0.01					
4	B	2	685.00	685.06	U	N/A	I C 2, II C 2	UPLAND	273		273				0.05					
4	B	5A	685.06	685.46	U	N/A	I C 2, II C 2	UPLAND	2117		2117							0.40		
4	B	5A	685.46	685.51	U	N/A	I A 1, II B 2	UPLAND	309		309							0.06		
4	B	5A	685.51	685.52	PEM1/SS1E	SLOPE	III A 3, II C 2	WETLAND	46	46								0.01		
4	B	5A	685.52	685.81	U	N/A	I A 2, II B 2	UPLAND	1525		1525							0.29		
4	B	5A	685.81	685.87	U	N/A	I C 2, II B 2	UPLAND	306		306							0.06		
4	B	5A	685.87	685.99	U	N/A	I A 2, II B 2	UPLAND	628		628							0.12		
4	B	5A	685.99	686.01	U	N/A	I C 2, II B 2	UPLAND	112		112							0.02		
4	B	5A	686.01	686.02	PFO1/4B	SLOPE	I C 2, II B 2	WETLAND	76	76								0.01		
4	B	5A	686.02	686.13	U	N/A	I C 2, II B 2	UPLAND	563		563							0.11		
4	B	5A	686.13	686.18	PFO4/SS4B	SLOPE	I A 2, II C 2	WETLAND	272	272								0.05		
4	B	5A	686.18	686.37	U	N/A	I C 2, II B 2	UPLAND	1002		1002							0.19		
4	B	5A	686.37	686.38	PSS4/EM1B	SLOPE	II A 2, III A 2	WETLAND	64	64								0.01		
4	B	5A	686.38	686.45	PFO4/SS4B	SLOPE	I A 2, II C 2	WETLAND	340	340								0.06		
4	B	5A	686.45	686.58	U	N/A	I C 2, II B 2	UPLAND	689		689							0.13		
4	B	2	686.58	686.70	PSS4/FO4B	SLOPE	II A 2, I A 2	WETLAND	639	639					0.12					
4	B	5A	686.70	686.71	PSS4/FO4B	SLOPE	II A 2, I A 2	WETLAND	70	70								0.01		
4	B	5A	686.71	687.26	U	N/A	I C 1	UPLAND	2906		2906							0.55		
4	B	5A	687.26	687.28	PFO1/4B	SLOPE	I C 2	WETLAND	73	73								0.01		
4	B	5A	687.28	688.77	U	N/A	I C 1	UPLAND	7882		7882							1.49		
4	B	5A	688.77	688.80	PFO1/4B	SLOPE	I C 2, II C 2	WETLAND	151	151								0.03		
4	B	5A	688.80	688.88	U	N/A	I C 2, II C 2	UPLAND	443		443							0.08		
4	B	5A	688.88	688.90	PFO1/4B	SLOPE	I C 2, II C 2	WETLAND	75	75								0.01		
4	B	5A	688.90	688.94	U	N/A	I C 2, II C 2	UPLAND	214		214							0.04		
4	B	5A	688.94	688.96	PFO1/4B	SLOPE	I C 2, II C 2	WETLAND	100	100								0.02		
4	B	5A	688.96	689.21	U	N/A	I C 2, II B 2	UPLAND	1331		1331							0.25		
4	B	2	689.21	689.21	U	N/A	I C 2, II B 2	UPLAND	7		7				0.00					
4	B	2	689.21	689.24	PSS1/FO1B	SLOPE	I C 3, II B 2	WETLAND	153	153					0.03					
4	B	2	689.24	689.30	U	N/A	I C 2, II C 2	UPLAND	310		310				0.06					

SPREAD	SECTION	ROW MODE	FROM MP	TO MP	NWI CODE	HGM CLASS	VIERECK	DESCRIPTION	LINEAR FEET	WETLAND FEET	UPLAND FEET	DISTURBED FEET	Comments	Mode 1 - Ice Workpad (miles)	Mode 2 - Frost Pack (miles)	Mode 3 - Timber Mats	Mode 4 - Granular Workpad	Mode 5A - Grade	Mode 5B - Mountain Grade	Stream & Flood Plain Crossings
4	B	2	689.30	689.30	U	N/A	II B 2	UPLAND	10		10				0.00					
4	B	2	689.30	689.31	PSS1B	SLOPE	II B 2, II C 2	WETLAND	66	66					0.01					
4	B	2	689.31	689.32	U	N/A	II B 2	UPLAND	40		40				0.01					
4	B	2	689.32	689.32	PSS1B	SLOPE	II B 2, II C 2	WETLAND	21	21					0.00					
4	B	2	689.32	689.35	U	N/A	II B 2	UPLAND	144		144				0.03					
4	B	2	689.35	689.42	PSS1B	SLOPE	II B 2, II C 2	WETLAND	350	350					0.07					
4	B	2	689.42	689.53	U	N/A	II B 2, II C 2	UPLAND	573		573				0.11					
4	B	2	689.53	689.53	PSS1/EM1B	SLOPE	II C 2, III A 2	WETLAND	39	39					0.01					
4	B	2	689.53	689.58	PEM1/SS1B	SLOPE	II B 2, III A 2	WETLAND	234	234					0.04					
4	B	2	689.58	689.58	U	N/A	II B 2	UPLAND	28		28				0.01					
4	B	2	689.58	689.79	PSS1/3B	FLAT - ORGANIC	II C 2	WETLAND	1100	1100					0.21					
4	B	2	689.79	689.80	PFO4B	SLOPE	I A 2, II C 2	WETLAND	69	69					0.01					
4	B	2	689.80	689.83	PFO1/4B	SLOPE	I C 2, II C 2	WETLAND	135	135					0.03					
4	B	2	689.83	689.84	PSS1/EM1B	SLOPE	II C 2, III A 2	WETLAND	80	80					0.02					
4	B	2	689.84	689.97	PSS1/3B	FLAT - ORGANIC	II C 2	WETLAND	681	681					0.13					
4	B	2	689.97	690.03	PSS1/EM1B	SLOPE	II C 2, III A 2	WETLAND	273	273					0.05					
4	B	2	690.03	690.28	U	N/A	II B 2, II C 2	UPLAND	1340		1340				0.25					
4	B	2	690.28	690.32	PSS1/EM1B	FLAT - MINERAL	II B 2, III A 2	WETLAND	197	197					0.04					
4	B	2	690.32	690.44	U	N/A	II B 2, II C 2	UPLAND	631		631				0.12					
4	B	2	690.44	690.47	PSS1/EM1B	FLAT - MINERAL	II B 2, III A 2	WETLAND	204	204					0.04					
4	B	2	690.47	690.80	PSS1/3B	FLAT - ORGANIC	II C 2	WETLAND	1710	1710					0.32					
4	B	2	690.80	690.84	U	N/A	II B 2, II C 2	UPLAND	225		225				0.04					
4	B	2	690.84	690.85	PFO4/1B	SLOPE	I C 2, II C 2	WETLAND	67	67					0.01					
4	B	2	690.85	690.89	PEM1/SS1E	SLOPE	III A 3, II C 2	WETLAND	181	181					0.03					
4	B	2	690.89	690.89	PFO4/SS1B	FLAT - ORGANIC	I A 2, II C 2	WETLAND	18	18					0.00					
4	B	2	690.89	690.97	U	N/A	II B 2, II C 2	UPLAND	396		396				0.07					
4	B	2	690.97	691.02	PSS1/3B	FLAT - ORGANIC	II B 2, II C 2	WETLAND	303	303					0.06					
4	B	2	691.02	691.11	PSS1/4B	FLAT - ORGANIC	II A 3, II C 2	WETLAND	465	465					0.09					
4	B	2	691.11	691.23	PFO4/SS1B	FLAT - ORGANIC	I A 2, II B 2	WETLAND	604	604					0.11					
4	B	2	691.23	691.29	PSS1B	FLAT - ORGANIC	II B 2, II C 2	WETLAND	337	337					0.06					
4	B	2	691.29	691.32	U	N/A	II B 2, II C 2	UPLAND	171		171				0.03					
4	B	2	691.32	691.35	PSS1B	FLAT - ORGANIC	II B 2, II C 2	WETLAND	152	152					0.03					
4	B	2	691.35	691.37	PSS1/FO4B	FLAT - ORGANIC	I A 3, II C 2	WETLAND	92	92					0.02					
4	B	2	691.37	691.41	PSS1B	FLAT - ORGANIC	II B 2, II C 2	WETLAND	230	230					0.04					
4	B	2	691.41	691.45	U	N/A	II B 2, II C 2	UPLAND	186		186				0.04					
4	B	2	691.45	691.54	U	N/A	I C 2	UPLAND	487		487				0.09					
4	B	2	691.54	691.65	PSS1B	FLAT - ORGANIC	II B 2, II C 2	WETLAND	578	578					0.11					
4	B	2	691.65	691.69	U	N/A	II B 2, II C 2	UPLAND	217		217				0.04					
4	B	2	691.69	691.81	PSS1B	FLAT - ORGANIC	II B 2, II C 2	WETLAND	646	646					0.12					
4	B	2	691.81	691.94	PEM1/SS1B	DEPRESSIONAL	III A 2, II C 2	WETLAND	657	657					0.12					
4	B	2	691.94	692.29	U	N/A	II C 2, III A 2	UPLAND	1877		1877				0.36					
4	B	2	692.29	692.34	PSS1/EM1B	SLOPE	II C 2, III A 2	WETLAND	250	250					0.05					
4	B	2	692.34	692.35	PSS1B	SLOPE	II B 2, II C 2	WETLAND	50	50					0.01					
4	B	2	692.35	692.49	U	N/A	II B 2, II C 2	UPLAND	757		757				0.14					
4	B	2	692.49	692.56	PSS1B	SLOPE	II C 1	WETLAND	338	338					0.06					
4	B	2	692.56	692.57	U	N/A	I C 2, II C 2	UPLAND	53		53				0.01					
4	B	2	692.57	692.59	PSS1B	SLOPE	II C 2	WETLAND	127	127					0.02					
4	B	2	692.59	693.35	U	N/A	III B 2, II C 2	UPLAND	3990		3990				0.76					
4	B	2	693.35	693.55	U	N/A	III A 2, II B 2	UPLAND	1097		1097				0.21					
4	B	2	693.55	693.97	U	N/A	III A 2, II C 2	UPLAND	2209		2209				0.42					
4	B	2	693.97	693.98	PEM1/SS1B	SLOPE	III A 2, II C 2	WETLAND	58	58					0.01					
4	B	2	693.98	694.99	U	N/A	III A 2, II C 2	UPLAND	5308		5308				1.01					
4	B	2	694.99	695.16	U	N/A	III A 2	UPLAND	882		882				0.17					
4	B	2	695.16	695.63	U	N/A	III A 2, II C 2	UPLAND	2503		2503				0.47					
4	B	2	695.63	695.63	U	N/A	I A 2	UPLAND	0		0				0.00					
4	B	5A	695.63	697.19	U	N/A	I A 2	UPLAND	8259		8259							1.56		
4	B	5A	697.19	697.26	U	N/A	I C 2, II C 2	UPLAND	368		368							0.07		
4	B	5A	697.26	697.28	U	N/A	I B 2	UPLAND	76		76							0.01		
4	B	5A	697.28	697.37	U	N/A	I C 2, II C 2	UPLAND	481		481							0.09		
4	B	5A	697.37	697.73	U	N/A	I A 2	UPLAND	1880		1880							0.36		
4	B	5A	697.73	698.13	U	N/A	I C 2, II C 2	UPLAND	2134		2134							0.40		
4	B	5A	698.13	698.14	U	N/A	I A 2, II C 2	UPLAND	63		63							0.01		
4	B	5A	698.14	700.51	U	N/A	I C 2, II C 2	UPLAND	12497		12497							2.37		
4	B	5A	700.51	701.25	U	N/A	I C 2, II B 2	UPLAND	3924		3924							0.74		
4	B	5A	701.25	701.49	U	N/A	I A 1	UPLAND	1264		1264							0.24		
4	B	5A	701.49	701.69	U	N/A	I C 2, II B 2	UPLAND	1033		1033							0.20		
4	B	5A	701.69	702.37	U	N/A	I A 1	UPLAND	3603		3603							0.68		
4	B	5A	702.37	702.57	U	N/A	I C 2, II B 2	UPLAND	1080		1080							0.20		
4	B	2	702.57	702.58	U	N/A	I C 2, II B 2	UPLAND	24		24				0.00					
4	B	2	702.58	702.60	PFO4/SS4B	FLAT - ORGANIC	I A 2, II A 2	WETLAND	95	95					0.02					
4	B	2	702.60	702.63	PSS1/EM1E	DEPRESSIONAL	II C 2, III A 3	WETLAND	173	173					0.03					
4	B	2	702.63	702.66	PFO4/SS4B	FLAT - ORGANIC	I A 2, II A 2	WETLAND	166	166					0.03					

SPREAD	SECTION	ROW MODE	FROM MP	TO MP	NWI CODE	HGM CLASS	VIERECK	DESCRIPTION	LINEAR FEET	WETLAND FEET	UPLAND FEET	DISTURBED FEET	Comments	Mode 1 - Ice Workpad (miles)	Mode 2 - Frost Pack (miles)	Mode 3 - Timber Mats	Mode 4 - Granular Workpad	Mode 5A - Grade	Mode 5B - Mountain Grade	Stream & Flood Plain Crossings
4	B	2	702.66	702.67	PSS1/EM1E	DEPRESSIONAL	II C 2, III A 3	WETLAND	43	43					0.01					
4	B	2	702.67	702.71	PFO4/SS4B	FLAT - ORGANIC	I A 2, II A 2	WETLAND	242	242					0.05					
4	B	2	702.71	702.73	PSS1B	DEPRESSIONAL	II C 1	WETLAND	111	111					0.02					
4	B	2	702.73	702.78	PFO4/SS4B	FLAT - ORGANIC	I A 2, II A 2	WETLAND	219	219					0.04					
4	B	2	702.78	702.79	PSS1/EM1E	DEPRESSIONAL	II C 1, III A 3	WETLAND	62	62					0.01					
4	B	2	702.79	702.89	U	N/A	I C 1	UPLAND	518		518				0.10					
4	B	2	702.89	702.89	PSS1/EM1E	DEPRESSIONAL	II C 1, III A 3	WETLAND	22	22					0.00					
4	B	2	702.89	702.90	PUBH	DEPRESSIONAL	NONE	WETLAND	27	27					0.01					
4	B	2	702.90	702.90	PSS1/EM1E	DEPRESSIONAL	II C 1, III A 3	WETLAND	31	31					0.01					
4	B	2	702.90	702.93	U	N/A	I C 1	UPLAND	153		153				0.03					
4	B	2	702.93	702.95	PFO4B	FLAT - ORGANIC	I A 2, II C 2	WETLAND	104	104					0.02					
4	B	2	702.95	703.01	PSS1/EM1B	DEPRESSIONAL	II C 1, III A 3	WETLAND	322	322					0.06					
4	B	2	703.01	703.03	PFO4B	FLAT - ORGANIC	I A 2, II C 2	WETLAND	83	83					0.02					
4	B	2	703.03	703.04	U	N/A	I A 3, II C 2	UPLAND	45		45				0.01					
4	B	2	703.04	703.08	PFO4B	FLAT - ORGANIC	I A 2, II C 2	WETLAND	241	241					0.05					
4	B	2	703.08	703.09	U	N/A	I A 3, II C 2	UPLAND	72		72				0.01					
4	B	2	703.09	703.14	PSS1B	DEPRESSIONAL	II C 1	WETLAND	263	263					0.05					
4	B	2	703.14	703.30	U	N/A	I C 1	UPLAND	814		814				0.15					
4	B	2	703.30	703.31	PSS1/EM1B	SLOPE	II C 1, III A 2	WETLAND	55	55					0.01					
4	B	2	703.31	703.40	U	N/A	I C 2	UPLAND	485		485				0.09					
4	B	2	703.40	703.41	PFO4B	FLAT - ORGANIC	I A 2	WETLAND	72	72					0.01					
4	B	2	703.41	703.43	PEM1B	DEPRESSIONAL	III A 2	WETLAND	65	65					0.01					
4	B	2	703.43	703.43	PFO4B	FLAT - ORGANIC	I A 2	WETLAND	29	29					0.01					
4	B	2	703.43	703.57	U	N/A	I C 2	UPLAND	707		707				0.13					
4	C	5A	703.57	704.70	U	N/A	I C 2	UPLAND	5969		5969							1.13		
4	C	WB-W	704.70	704.71	U	N/A	I C 2	UPLAND	66		66									0.01
4	C	WB-W	704.71	704.74	R3UBH	RIVERINE	NONE	WETLAND	158	158										0.03
4	C	WB-W	704.74	704.75	R3USC	RIVERINE	NONE	WETLAND	47	47										0.01
4	C	WB-W	704.75	704.76	U	N/A	I C 2, II C 2	UPLAND	59		59									0.01
4	C	5A	704.76	704.79	U	N/A	I C 2, II C 2	UPLAND	177		177							0.03		
4	C	5A	704.79	704.82	PFO4B	FLAT - ORGANIC	I A 2, II C 2	WETLAND	126	126								0.02		
4	C	5A	704.82	704.86	U	N/A	I C 2, II C 2	UPLAND	237		237							0.04		
4	C	5A	704.86	704.87	PFO4B	FLAT - ORGANIC	I A 2, II C 2	WETLAND	62	62								0.01		
4	C	5A	704.87	704.88	PSS4/1B	SLOPE	II A 2, III A 2	WETLAND	58	58								0.01		
4	C	2	704.88	704.95	PSS4/1B	SLOPE	II A 2, III A 2	WETLAND	354	354					0.07					
4	C	2	704.95	704.96	PSS1/EM1E	SLOPE	II C 2, III A 2	WETLAND	22	22					0.00					
4	C	2	704.96	704.99	PSS4/1B	SLOPE	II A 2, III A 2	WETLAND	184	184					0.03					
4	C	2	704.99	705.02	PSS1/EM1E	SLOPE	II C 2, III A 2	WETLAND	134	134					0.03					
4	C	2	705.02	705.03	PFO4/SS4B	FLAT - ORGANIC	I A 1, II C 2	WETLAND	68	68					0.01					
4	C	2	705.03	705.07	PSS4/1B	SLOPE	II A 2, III A 2	WETLAND	227	227					0.04					
4	C	5A	705.07	705.07	PSS4/1B	SLOPE	II A 2, III A 2	WETLAND	17	17								0.00		
4	C	5A	705.07	705.09	U	N/A	I C 2, II C 2	UPLAND	105		105							0.02		
4	C	5A	705.09	705.12	U	N/A	I A 2	UPLAND	140		140							0.03		
4	C	5A	705.12	705.13	U	N/A	I C 2, II C 2	UPLAND	27		27							0.01		
4	C	5A	705.13	705.23	U	N/A	I A 2	UPLAND	534		534							0.10		
4	C	5A	705.23	705.25	PFO4B	FLAT - ORGANIC	I A 2	WETLAND	94	94								0.02		
4	C	5A	705.25	705.25	U	N/A	I A 2	UPLAND	18		18							0.00		
4	C	5A	705.25	705.60	U	N/A	I C 2, II C 2	UPLAND	1854		1854							0.35		
4	C	WB-W	705.60	705.60	U	N/A	I C 2, II C 2	UPLAND	25		25									0.00
4	C	WB-W	705.60	705.62	PSS1B	RIVERINE	II B 2, II C 2	WETLAND	65	65										0.01
4	C	5A	705.62	705.62	PSS1B	RIVERINE	II B 2, II C 2	WETLAND	37	37								0.01		
4	C	5A	705.62	705.98	U	N/A	I C 2, II C 2	UPLAND	1856		1856							0.35		
4	C	5A	705.98	705.99	PFO4B	FLAT - ORGANIC	I A 1	WETLAND	53	53								0.01		
4	C	5A	705.99	706.29	U	N/A	I C 2, II C 2	UPLAND	1632		1632							0.31		
4	C	5A	706.29	706.30	PFO1/SS1C	RIVERINE	I C 2, II C 2	WETLAND	21	21								0.00		
4	C	WB-W	706.30	706.31	PFO1/SS1C	RIVERINE	I C 2, II C 2	WETLAND	60	60										0.01
4	C	5A	706.31	706.32	PFO1/SS1C	RIVERINE	I C 2, II C 2	WETLAND	41	41								0.01		
4	C	5A	706.32	706.66	U	N/A	I C 2, II C 2	UPLAND	1831		1831							0.35		
4	C	5A	706.66	706.67	PFO1/4B	RIVERINE	I C 1	WETLAND	34	34								0.01		
4	C	5A	706.67	706.71	U	N/A	I C 1	UPLAND	231		231							0.04		
4	C	5A	706.71	706.72	PFO1/4B	RIVERINE	I C 1	WETLAND	23	23								0.00		
4	C	WB-W	706.72	706.72	PFO1/4B	RIVERINE	I C 1	WETLAND	26	26										0.01
4	C	WB-W	706.72	706.73	PSS1/EM1Eb	RIVERINE	II C 2, III A 3	WETLAND	54	54										0.01
4	C	WB-W	706.73	706.74	PFO1/4B	RIVERINE	I C 1	WETLAND	9	9										0.00
4	C	5A	706.74	706.74	PFO1/4B	RIVERINE	I C 1	WETLAND	18	18								0.00		
4	C	5A	706.74	707.03	U	N/A	I C 2	UPLAND	1533		1533							0.29		
4	C	5A	707.03	707.03	PFO4/1B	RIVERINE	I C 1	WETLAND	9	9								0.00		
4	C	WB-W	707.03	707.04	PFO4/1B	RIVERINE	I C 1	WETLAND	46	46										0.01
4	C	WB-W	707.04	707.04	U	N/A	I C 2	UPLAND	14		14									0.00
4	C	5A	707.04	707.69	U	N/A	I C 2	UPLAND	3428		3428							0.65		
4	C	5A	707.69	707.70	PEM1/SS1C	RIVERINE	III A 2, II C 2	WETLAND	28	28								0.01		
4	C	5A	707.70	707.70	U	N/A	II B 2, III A 2	UPLAND	24		24							0.00		

SPREAD	SECTION	ROW MODE	FROM MP	TO MP	NWI CODE	HGM CLASS	VIERECK	DESCRIPTION	LINEAR FEET	WETLAND FEET	UPLAND FEET	DISTURBED FEET	Comments	Mode 1 - Ice Workpad (miles)	Mode 2 - Frost Pack (miles)	Mode 3 - Timber Mats	Mode 4 - Granular Workpad	Mode 5A - Grade	Mode 5B - Mountain Grade	Stream & Flood Plain Crossings
4	C	WB-W	707.70	707.70	U	N/A	II B 2, III A 2	UPLAND	3		3									0.00
4	C	WB-W	707.70	707.71	PSS1/EM1E	RIVERINE	II C 2, III A 2	WETLAND	52	52										0.01
4	C	WB-W	707.71	707.72	U	N/A	I C 2	UPLAND	37		37									0.01
4	C	5A	707.72	708.03	U	N/A	I C 2	UPLAND	1656		1656							0.31		
4	C	5A	708.03	708.04	PFO1/4B	SLOPE	I C 2, II C 2	WETLAND	34	34								0.01		
4	C	5A	708.04	708.83	U	N/A	I C 2, II C 2	UPLAND	4188		4188							0.79		
4	C	5A	708.83	708.84	PFO1/4B	SLOPE	I C 2, II C 2	WETLAND	48	48								0.01		
4	C	5A	708.84	709.05	U	N/A	I C 2, II C 2	UPLAND	1111		1111							0.21		
4	C	5A	709.05	709.06	PFO1/4B	SLOPE	I C 2, II C 2	WETLAND	36	36								0.01		
4	C	5A	709.06	709.06	PSS1/EM1E	SLOPE	II C 2, III A 2	WETLAND	6	6								0.00		
4	C	WB-W	709.06	709.07	PSS1/EM1E	SLOPE	II C 2, III A 2	WETLAND	60	60										0.01
4	C	5A	709.07	709.08	PSS1/EM1E	SLOPE	II C 2, III A 2	WETLAND	25	25								0.00		
4	C	5A	709.08	709.41	U	N/A	I C 2, II C 2	UPLAND	1771		1771							0.34		
4	C	5A	709.41	709.80	U	N/A	I C 2, II C 2	UPLAND	2044		2044							0.39		
4	C	2	709.80	709.81	U	N/A	I C 2, II C 2	UPLAND	57		57				0.01					
4	C	2	709.81	709.81	PFO1/4B	SLOPE	I C 2, II C 2	WETLAND	12	12					0.00					
4	C	2	709.81	709.84	PSS1/EM1B	SLOPE	II C 2, III A 2	WETLAND	148	148					0.03					
4	C	2	709.84	709.84	PFO1/4B	SLOPE	I C 2, II C 2	WETLAND	18	18					0.00					
4	C	2	709.84	709.89	U	N/A	I C 2, II C 2	UPLAND	224		224				0.04					
4	C	2	709.89	709.90	PFO1/4B	SLOPE	I C 2, II C 2	WETLAND	50	50					0.01					
4	C	2	709.90	709.94	U	N/A	I C 2, II C 2	UPLAND	249		249				0.05					
4	C	2	709.94	709.99	PSS1/EM1B	SLOPE	II C 2, III A 2	WETLAND	233	233					0.04					
4	C	2	709.99	710.06	PFO4/1B	SLOPE	I C 2, II C 2	WETLAND	370	370					0.07					
4	C	2	710.06	710.08	PFO1/4B	SLOPE	I C 2, II C 2	WETLAND	119	119					0.02					
4	C	2	710.08	710.10	PFO4/1B	SLOPE	I C 2, II C 2	WETLAND	131	131					0.02					
4	C	2	710.10	710.14	PFO1/4B	SLOPE	I C 2, II C 2	WETLAND	188	188					0.04					
4	C	5A	710.14	710.17	PFO1/4B	SLOPE	I C 2, II C 2	WETLAND	160	160								0.03		
4	C	5A	710.17	710.26	U	N/A	I C 2, II C 2	UPLAND	500		500							0.09		
4	C	2	710.26	710.30	U	N/A	I C 2, II C 2	UPLAND	202		202				0.04					
4	C	2	710.30	710.31	PFO1/4B	SLOPE	I C 2, II C 2	WETLAND	21	21					0.00					
4	C	2	710.31	710.35	PSS1/EM1B	SLOPE	II C 2, III A 2	WETLAND	230	230					0.04					
4	C	2	710.35	710.36	PFO4B	SLOPE	I A 2	WETLAND	48	48					0.01					
4	C	2	710.36	710.40	PFO1/4B	SLOPE	I C 2, II C 2	WETLAND	197	197					0.04					
4	C	2	710.40	710.44	PFO4B	SLOPE	I A 2	WETLAND	230	230					0.04					
4	C	2	710.44	710.45	PFO1/4B	SLOPE	I C 2, II C 2	WETLAND	52	52					0.01					
4	C	2	710.45	710.54	U	N/A	I C 2, II C 2	UPLAND	490		490				0.09					
4	C	2	710.54	710.61	PFO4/SS4B	FLAT - ORGANIC	I A 2, II A 2	WETLAND	338	338					0.06					
4	C	2	710.61	710.65	PSS1/EM1B	SLOPE	II C 2, III A 2	WETLAND	207	207					0.04					
4	C	2	710.65	710.66	PFO4/SS4B	FLAT - ORGANIC	I A 2, II A 2	WETLAND	97	97					0.02					
4	C	2	710.66	710.69	PSS1/EM1B	SLOPE	II C 2, III A 2	WETLAND	125	125					0.02					
4	C	2	710.69	710.71	PFO4/SS4B	FLAT - ORGANIC	I A 2, II A 2	WETLAND	130	130					0.02					
4	C	2	710.71	710.74	PSS1/EM1B	SLOPE	II C 2, III A 2	WETLAND	146	146					0.03					
4	C	2	710.74	710.78	PFO4/SS4B	FLAT - ORGANIC	I A 2, II A 2	WETLAND	217	217					0.04					
4	C	2	710.78	710.78	PSS1/EM1B	SLOPE	II C 2, III A 2	WETLAND	8	8					0.00					
4	C	2	710.78	710.82	PSS1/EM1B	SLOPE	II C 2, III A 2	WETLAND	179	179					0.03					
4	C	2	710.82	710.82	PSS1/EM1B	SLOPE	II C 2, III A 2	WETLAND	9	9					0.00					
4	C	2	710.82	710.85	PSS4/1B	DEPRESSIONAL	II A 2, II C 2	WETLAND	184	184					0.03					
4	C	2	710.85	710.91	PFO4/SS1B	FLAT - ORGANIC	I A 2, II C 2	WETLAND	288	288					0.05					
4	C	2	710.91	710.91	PSS4/1B	DEPRESSIONAL	II A 2, II C 2	WETLAND	16	16					0.00					
4	C	2	710.91	710.91	PFO4/SS1B	FLAT - ORGANIC	I A 2, II C 2	WETLAND	15	15					0.00					
4	C	2	710.91	710.94	PSS4/1B	DEPRESSIONAL	II A 2, II C 2	WETLAND	130	130					0.02					
4	C	2	710.94	710.96	PSS1/4B	DEPRESSIONAL	II A 3, II C 2	WETLAND	94	94					0.02					
4	C	2	710.96	711.00	PFO4/SS1B	FLAT - ORGANIC	I A 2, II C 2	WETLAND	224	224					0.04					
4	C	2	711.00	711.03	PSS1/4B	DEPRESSIONAL	II A 3, II C 2	WETLAND	153	153					0.03					
4	C	2	711.03	711.09	PSS1/EM1C	DEPRESSIONAL	II C 1, III A 2	WETLAND	328	328					0.06					
4	C	2	711.09	711.14	U	N/A	I C 2, II C 2	UPLAND	263		263				0.05					
4	C	2	711.14	711.23	PSS1/EM1C	SLOPE	II C 2, III A 3	WETLAND	476	476					0.09					
4	C	2	711.23	711.24	U	N/A	I C 2, II B 2	UPLAND	63		63				0.01					
4	C	5A	711.24	711.76	U	N/A	I C 2, II B 2	UPLAND	2762		2762							0.52		
4	C	2	711.76	711.89	PFO4/SS1B	FLAT - ORGANIC	I A 2, II B 2	WETLAND	640	640					0.12					
4	C	2	711.89	712.14	U	N/A	I C 2, II C 2	UPLAND	1364		1364				0.26					
4	C	2	712.14	712.18	PFO4/SS1B	FLAT - ORGANIC	I A 2, II B 2	WETLAND	197	197					0.04					
4	C	2	712.18	712.21	U	N/A	I C 1	UPLAND	164		164				0.03					
4	C	2	712.21	712.30	PFO4/SS1B	FLAT - ORGANIC	I A 2, II B 2	WETLAND	476	476					0.09					
4	C	2	712.30	712.50	U	N/A	I C 2, II C 2	UPLAND	1041		1041				0.20					
4	C	2	712.50	712.52	PFO4/SS1B	FLAT - ORGANIC	I A 2, II B 2	WETLAND	87	87					0.02					
4	C	2	712.52	712.53	PFO1/4B	DEPRESSIONAL	I C 2, II C 2	WETLAND	58	58					0.01					
4	C	2	712.53	712.62	PFO4/SS1B	FLAT - ORGANIC	I A 2, II B 2	WETLAND	471	471					0.09					
4	C	2	712.62	712.65	U	N/A	I C 2, II C 2	UPLAND	150		150				0.03					
4	C	5A	712.65	713.06	U	N/A	I C 2, II C 2	UPLAND	2192		2192							0.42		
4	C	5A	713.06	713.09	PSS1/EM1B	DEPRESSIONAL	II C 2, III A 2	WETLAND	137	137								0.03		
4	C	5A	713.09	713.21	U	N/A	I C 2, II C 2	UPLAND	636		636							0.12		

SPREAD	SECTION	ROW MODE	FROM MP	TO MP	NWI CODE	HGM CLASS	VIERECK	DESCRIPTION	LINEAR FEET	WETLAND FEET	UPLAND FEET	DISTURBED FEET	Comments	Mode 1 - Ice Workpad (miles)	Mode 2 - Frost Pack (miles)	Mode 3 - Timber Mats	Mode 4 - Granular Workpad	Mode 5A - Grade	Mode 5B - Mountain Grade	Stream & Flood Plain Crossings
4	C	5A	713.21	713.84	U	N/A	I C 1	UPLAND	3357		3357							0.64		
4	C	5A	713.84	713.86	PSS1/EM1B	SLOPE	II C 2, III A 2	WETLAND	69	69								0.01		
4	C	2	713.86	713.94	PSS1/EM1B	SLOPE	II C 2, III A 2	WETLAND	450	450					0.09					
4	C	2	713.94	714.11	U	N/A	I C 1	UPLAND	876		876				0.17					
4	C	2	714.11	714.12	PSS1/EM1C	SLOPE	II C 2, III A 2	WETLAND	71	71					0.01					
4	C	2	714.12	714.21	PSS4/FO4B	FLAT - ORGANIC	I A 2, II C 2	WETLAND	463	463					0.09					
4	C	5A	714.21	714.23	PSS4/FO4B	FLAT - ORGANIC	I A 2, II C 2	WETLAND	101	101								0.02		
4	C	5A	714.23	714.46	U	N/A	I C 1	UPLAND	1248		1248							0.24		
4	C	5A	714.46	714.49	PFO1/EM1B	DEPRESSIONAL	I C 2, III A 2	WETLAND	153	153								0.03		
4	C	5A	714.49	714.88	U	N/A	I C 1	UPLAND	2049		2049							0.39		
4	C	5A	714.88	714.90	PFO4/1B	DEPRESSIONAL	I C 2, II C 2	WETLAND	126	126								0.02		
4	C	5A	714.90	715.95	U	N/A	I C 1	UPLAND	5522		5522							1.05		
4	C	5A	715.95	715.97	PFO4B	FLAT - ORGANIC	I A 2	WETLAND	83	83								0.02		
4	C	5A	715.97	715.97	PEM1Cb	RIVERINE	III A 2	WETLAND	18	18								0.00		
4	C	WB-W	715.97	715.98	PEM1Cb	RIVERINE	III A 2	WETLAND	60	60										0.01
4	C	2	715.98	715.99	PEM1Cb	RIVERINE	III A 2	WETLAND	50	50					0.01					
4	C	2	715.99	716.00	PFO4B	FLAT - ORGANIC	I A 2	WETLAND	54	54					0.01					
4	C	2	716.00	716.02	U	N/A	I A 2	UPLAND	126		126				0.02					
4	C	2	716.02	716.25	PFO4B	FLAT - MINERAL	I A 2	WETLAND	1204	1204					0.23					
4	C	2	716.25	716.48	U	N/A	I C 2, II C 2	UPLAND	1185		1185				0.22					
4	C	2	716.48	716.51	PFO1/4B	FLAT - ORGANIC	I C 2, II C 2	WETLAND	172	172					0.03					
4	C	2	716.51	716.79	U	N/A	I C 2, II C 2	UPLAND	1483		1483				0.28					
4	C	2	716.79	716.83	PFO4B	FLAT - ORGANIC	I A 2	WETLAND	231	231					0.04					
4	C	2	716.83	716.85	PSS1/EM1B	DEPRESSIONAL	II C 2, III A 2	WETLAND	104	104					0.02					
4	C	2	716.85	716.91	PSS4/FO4B	FLAT - ORGANIC	II A 2, II C 2	WETLAND	324	324					0.06					
4	C	2	716.91	716.93	PSS1/EM1B	DEPRESSIONAL	II C 2, III A 2	WETLAND	78	78					0.01					
4	C	2	716.93	717.06	PSS4/FO4B	FLAT - ORGANIC	II A 2, II C 2	WETLAND	695	695					0.13					
4	C	2	717.06	717.07	PSS1/EM1B	DEPRESSIONAL	II C 2, III A 2	WETLAND	29	29					0.01					
4	C	2	717.07	717.08	PFO4B	FLAT - ORGANIC	I A 2	WETLAND	93	93					0.02					
4	C	2	717.08	717.09	PSS1/EM1B	DEPRESSIONAL	II C 2, III A 2	WETLAND	52	52					0.01					
4	C	2	717.09	717.15	PFO4B	FLAT - ORGANIC	I A 2	WETLAND	279	279					0.05					
4	C	2	717.15	717.16	U	N/A	I A 2	UPLAND	83		83				0.02					
4	C	2	717.16	717.20	U	N/A	I C 2, II B 2	UPLAND	203		203				0.04					
4	C	2	717.20	717.21	U	N/A	I A 2	UPLAND	69		69				0.01					
4	C	2	717.21	717.30	U	N/A	I C 2	UPLAND	444		444				0.08					
4	C	5A	717.30	717.83	U	N/A	I C 2	UPLAND	2829		2829							0.54		
4	C	5A	717.83	717.87	PFO4B	FLAT - ORGANIC	I A 2	WETLAND	211	211								0.04		
4	C	5A	717.87	717.91	U	N/A	I C 2	UPLAND	192		192							0.04		
4	C	5A	717.91	718.05	U	N/A	I A 2, II B 2	UPLAND	736		736							0.14		
4	C	5A	718.05	718.19	U	N/A	I C 2	UPLAND	735		735							0.14		
4	C	5A	718.19	718.20	U	N/A	I A 2, II B 2	UPLAND	81		81							0.02		
4	C	5A	718.20	718.42	U	N/A	I C 2, II C 2	UPLAND	1145		1145							0.22		
4	C	5A	718.42	718.43	PFO4/1B	SLOPE	I C 2, II C 2	WETLAND	24	24								0.00		
4	C	5A	718.43	718.46	PSS1/EM1C	SLOPE	II C 2, III A 2	WETLAND	176	176								0.03		
4	C	5A	718.46	719.53	U	N/A	I C 2, II C 2	UPLAND	5630		5630							1.07		
4	C	2	719.53	719.59	U	N/A	I C 2, II C 2	UPLAND	332		332				0.06					
4	C	2	719.59	719.61	PSS1/EM1C	RIVERINE	II C 2, III A 2	WETLAND	112	112					0.02					
4	C	2	719.61	719.62	U	N/A	I C 2, II C 2	UPLAND	36		36				0.01					
4	C	5A	719.62	720.07	U	N/A	I C 2, II C 2	UPLAND	2374		2374							0.45		
4	C	5A	720.07	720.08	PFO1/4B	FLAT - ORGANIC	I C 2, II C 2	WETLAND	84	84								0.02		
4	C	5A	720.08	720.08	PSS1/EM1B	DEPRESSIONAL	II C 2, III A 3	WETLAND	2	2								0.00		
4	C	2	720.08	720.21	PSS1/EM1B	DEPRESSIONAL	II C 2, III A 3	WETLAND	650	650					0.12					
4	C	2	720.21	720.22	PSS4/1B	FLAT - ORGANIC	II A 2, II C 2	WETLAND	85	85					0.02					
4	C	2	720.22	720.36	PSS1/EM1B	DEPRESSIONAL	II C 2, III A 3	WETLAND	746	746					0.14					
4	C	2	720.36	720.38	U	N/A	I C 2, II C 2	UPLAND	109		109				0.02					
4	C	WB-W	720.38	720.39	U	N/A	I C 2, II C 2	UPLAND	43		43									0.01
4	C	WB-W	720.39	720.42	R2UBH	RIVERINE	NONE	WETLAND	152	152										0.03
4	C	WB-W	720.42	720.43	U	N/A	I C 2, II B 2	UPLAND	75		75									0.01
4	C	5A	720.43	720.52	U	N/A	I C 2, II B 2	UPLAND	439		439							0.08		
4	C	5A	720.52	720.52	PEM1B	DEPRESSIONAL	III A 2	WETLAND	23	23								0.00		
4	C	5A	720.52	720.54	U	N/A	II B 2	UPLAND	92		92							0.02		
4	C	5A	720.54	720.58	U	N/A	I C 2, II B 2	UPLAND	196		196							0.04		
4	C	5A	720.58	720.60	U	N/A	I C 2, II B 2	UPLAND	147		147							0.03		
4	C	5A	720.60	720.62	PEM1B	DEPRESSIONAL	III A 2	WETLAND	65	65								0.01		
4	C	5A	720.62	720.65	U	N/A	III A 2	UPLAND	168		168							0.03		
4	C	5A	720.65	720.69	U	N/A	I B 2, II B 2	UPLAND	238		238							0.05		
4	C	5A	720.69	720.72	U	N/A	II B 2	UPLAND	150		150							0.03		
4	C	5A	720.72	720.79	U	N/A	I B 2, II B 2	UPLAND	359		359							0.07		
4	C	5A	720.79	720.79	R2UBH	RIVERINE	NONE	WETLAND	13	13								0.00		
4	C	WB-W	720.79	720.98	R2UBH	RIVERINE	NONE	WETLAND	1012	1012										0.19
4	C	WB-W	720.98	721.05	R2USC	RIVERINE	NONE	WETLAND	345	345										0.07
4	C	WB-W	721.05	721.06	U	N/A	I B 2, II B 2	UPLAND	52		52									0.01

SPREAD	SECTION	ROW MODE	FROM MP	TO MP	NWI CODE	HGM CLASS	VIERECK	DESCRIPTION	LINEAR FEET	WETLAND FEET	UPLAND FEET	DISTURBED FEET	Comments	Mode 1 - Ice Workpad (miles)	Mode 2 - Frost Pack (miles)	Mode 3 - Timber Mats	Mode 4 - Granular Workpad	Mode 5A - Grade	Mode 5B - Mountain Grade	Stream & Flood Plain Crossings
4	C	5A	721.06	721.15	U	N/A	I B 2, II B 2	UPLAND	504		504							0.10		
4	C	5A	721.15	721.39	U	N/A	I B 2, II B 2	UPLAND	1254		1254							0.24		
4	C	5A	721.39	721.41	PEM1/SS1C	SLOPE	III A 2, II B 2	WETLAND	84	84								0.02		
4	C	5A	721.41	721.43	PEM1/FO1B	SLOPE	III A 2, I B 3	WETLAND	114	114								0.02		
4	C	5A	721.43	721.44	U	N/A	I B 2, II B 2	UPLAND	32		32							0.01		
4	C	5A	721.44	721.46	PEM1/FO1B	SLOPE	III A 2, I B 3	WETLAND	131	131								0.02		
4	C	5A	721.46	721.47	U	N/A	I B 2, II B 2	UPLAND	56		56							0.01		
4	C	5A	721.47	721.58	PEM1/FO1B	SLOPE	III A 2, I B 3	WETLAND	593	593								0.11		
4	C	5A	721.58	721.68	U	N/A	I B 2, II B 2	UPLAND	496		496							0.09		
4	C	5A	721.68	721.70	PEM1/FO1B	SLOPE	III A 2, I B 3	WETLAND	93	93								0.02		
4	C	5A	721.70	721.71	U	N/A	I B 3, II C 2	UPLAND	76		76							0.01		
4	C	5A	721.71	721.72	U	N/A	I B 2, II B 2	UPLAND	71		71							0.01		
4	C	5A	721.72	721.75	PSS1/FO1B	SLOPE	I B 3, II B 2	WETLAND	126	126								0.02		
4	C	5A	721.75	721.76	PEM1/FO1B	SLOPE	III A 2, I B 3	WETLAND	61	61								0.01		
4	C	5A	721.76	721.76	PSS1/FO1B	SLOPE	I B 3, II B 2	WETLAND	26	26								0.00		
4	C	5A	721.76	721.80	U	N/A	I B 3, II C 2	UPLAND	180		180							0.03		
4	C	5A	721.80	721.83	U	N/A	I B 2, II C 2	UPLAND	146		146							0.03		
4	C	5A	721.83	721.83	PEM1/FO1B	SLOPE	III A 2, I B 3	WETLAND	49	49								0.01		
4	C	5A	721.83	721.93	U	N/A	I B 2, II B 2	UPLAND	515		515							0.10		
4	C	5A	721.93	721.95	PEM1/FO1B	SLOPE	III A 2, I B 3	WETLAND	113	113								0.02		
4	C	5A	721.95	722.10	U	N/A	I B 2, II B 2	UPLAND	752		752							0.14		
4	C	5A	722.10	722.12	PSS1/EM1B	SLOPE	II B 2, III A 2	WETLAND	103	103								0.02		
4	C	5A	722.12	722.15	U	N/A	I B 3, II B 2	UPLAND	200		200							0.04		
4	C	5A	722.15	722.21	U	N/A	I B 2, II B 2	UPLAND	290		290							0.05		
4	C	5A	722.21	722.22	U	N/A	I B 3, II B 2	UPLAND	42		42							0.01		
4	C	5A	722.22	722.24	PEM1/SS1C	SLOPE	III A 2, II B 2	WETLAND	100	100								0.02		
4	C	5A	722.24	722.44	U	N/A	I B 2, II C 2	UPLAND	1090		1090							0.21		
4	C	5A	722.44	722.52	PEM1/FO1B	SLOPE	III A 2, II B 2	WETLAND	420	420								0.08		
4	C	5A	722.52	722.58	U	N/A	I B 2, II B 2	UPLAND	297		297							0.06		
4	C	5A	722.58	722.60	PSS1/FO4B	SLOPE	II C 2, I A 3	WETLAND	108	108								0.02		
4	C	5A	722.60	722.81	U	N/A	I B 2, II B 2	UPLAND	1117		1117							0.21		
4	C	5A	722.81	722.82	PSS1/EM1B	SLOPE	II B 2, III A 2	WETLAND	64	64								0.01		
4	C	5A	722.82	722.86	U	N/A	I B 2, II B 2	UPLAND	229		229							0.04		
4	C	5A	722.86	722.88	PSS1/EM1B	SLOPE	II B 2, III A 2	WETLAND	69	69								0.01		
4	C	5A	722.88	722.94	U	N/A	I B 2, II B 2	UPLAND	303		303							0.06		
4	C	5A	722.94	722.94	PSS1/EM1B	SLOPE	II B 2, III A 2	WETLAND	12	12								0.00		
4	C	5A	722.94	722.96	U	N/A	I B 2, II B 2	UPLAND	129		129							0.02		
4	C	5A	722.96	723.95	U	N/A	I B 3, II B 2	UPLAND	5204		5204							0.99		
4	C	5A	723.95	724.09	U	N/A	I B 2, II B 2	UPLAND	754		754							0.14		
4	C	5A	724.09	724.65	U	N/A	I B 3, II B 2	UPLAND	2952		2952							0.56		
4	C	5A	724.65	724.69	PEM1B	DEPRESSIONAL	III A 2	WETLAND	219	219								0.04		
4	C	5A	724.69	724.85	U	N/A	I B 2, II B 2	UPLAND	833		833							0.16		
4	C	4	724.85	724.92	PEM1/SS1B	SLOPE	III A 2, II B 2	WETLAND	362	362							0.07			
4	C	4	724.92	724.97	PEM1B	SLOPE	III A 2	WETLAND	260	260							0.05			
4	C	4	724.97	724.98	PEM1/SS1B	SLOPE	III A 2, II B 2	WETLAND	49	49							0.01			
4	C	4	724.98	725.03	PFO1/4B	SLOPE	I C 2, III A 2	WETLAND	288	288							0.05			
4	C	4	725.03	725.07	PSS4/1B	SLOPE	II A 2, II C 2	WETLAND	201	201							0.04			
4	C	4	725.07	725.12	PFO1/4B	SLOPE	I C 2, III A 2	WETLAND	258	258							0.05			
4	C	4	725.12	725.23	PSS4/1B	SLOPE	II A 3, II C 2	WETLAND	610	610							0.12			
4	C	4	725.23	725.25	PFO1/4B	SLOPE	I C 2, III A 2	WETLAND	109	109							0.02			
4	C	4	725.25	725.35	PSS4/1B	SLOPE	II A 3, II C 2	WETLAND	524	524							0.10			
4	C	4	725.35	725.40	PFO1/4B	SLOPE	I C 2, III A 2	WETLAND	237	237							0.04			
4	C	4	725.40	725.42	PSS4/1B	SLOPE	II A 3, II C 2	WETLAND	146	146							0.03			
4	C	4	725.42	725.48	PFO1/4B	SLOPE	I C 2, III A 2	WETLAND	277	277							0.05			
4	C	4	725.48	725.66	PSS4/1B	SLOPE	II A 3, II C 2	WETLAND	945	945							0.18			
4	C	4	725.66	725.71	PEM1E	RIVERINE	III A 3	WETLAND	267	267							0.05			
4	C	WB-W	725.71	725.71	PEM1E	RIVERINE	III A 3	WETLAND	33	33										0.01
4	C	WB-W	725.71	725.74	R2USC	RIVERINE	NONE	WETLAND	119	119										0.02
4	C	WB-W	725.74	725.74	R2UBH	RIVERINE	NONE	WETLAND	26	26										0.00
4	C	WB-W	725.74	725.74	R2USC	RIVERINE	NONE	WETLAND	10	10										0.00
4	C	WB-W	725.74	725.75	PSS1/EM1C	RIVERINE	II C 2, III A 2	WETLAND	43	43										0.01
4	C	WB-W	725.75	725.76	U	N/A	I B 2, II B 2	UPLAND	40		40									0.01
4	C	5A	725.76	727.53	U	N/A	I B 2, II B 2	UPLAND	9353		9353							1.77		
4	C	5A	727.53	727.57	PFO4/1B	FLAT - ORGANIC	I C 2, II C 2	WETLAND	212	212								0.04		
4	C	5A	727.57	727.79	U	N/A	I B 2, II B 2	UPLAND	1175		1175							0.22		
4	C	WB-W	727.79	727.81	U	N/A	I B 2, II B 2	UPLAND	67		67									0.01
4	C	WB-W	727.81	727.81	PSS1C	RIVERINE	II B 1	WETLAND	16	16										0.00
4	C	WB-W	727.81	727.83	R2UBH	RIVERINE	NONE	WETLAND	92	92										0.02
4	C	WB-W	727.83	727.84	PSS1C	RIVERINE	II B 1	WETLAND	95	95										0.02
4	C	5A	727.84	727.89	PSS1C	RIVERINE	II B 1	WETLAND	228	228								0.04		
4	C	5A	727.89	728.18	U	N/A	I B 2, III A 2	UPLAND	1556		1556							0.29		
4	C	5A	728.18	728.19	PFO1B	DEPRESSIONAL	I B 2, II B 2	WETLAND	64	64								0.01		

SPREAD	SECTION	ROW MODE	FROM MP	TO MP	NWI CODE	HGM CLASS	VIERECK	DESCRIPTION	LINEAR FEET	WETLAND FEET	UPLAND FEET	DISTURBED FEET	Comments	Mode 1 - Ice Workpad (miles)	Mode 2 - Frost Pack (miles)	Mode 3 - Timber Mats	Mode 4 - Granular Workpad	Mode 5A - Grade	Mode 5B - Mountain Grade	Stream & Flood Plain Crossings
4	C	5A	728.19	728.24	PSS4/1B	DEPRESSIONAL	II A 2, II C 2	WETLAND	231	231								0.04		
4	C	5A	728.24	728.24	PFO1B	DEPRESSIONAL	I B 2, II B 2	WETLAND	34	34								0.01		
4	C	5A	728.24	728.74	U	N/A	I B 2, III A 2	UPLAND	2613		2613							0.49		
4	C	5A	728.74	728.77	PFO1/4B	SLOPE	I C 2, II C 2	WETLAND	180	180								0.03		
4	C	5A	728.77	728.82	PSS1/EM1C	RIVERINE	II A 2, II C 2	WETLAND	234	234								0.04		
4	C	5A	728.82	729.41	U	N/A	I B 2, III A 2	UPLAND	3108		3108							0.59		
4	C	WB-W	729.41	729.42	U	N/A	I B 2, III A 2	UPLAND	60		60									0.01
4	C	5A	729.42	729.77	U	N/A	I B 2, III A 2	UPLAND	1875		1875							0.36		
4	C	5A	729.77	730.75	U	N/A	I B 3, II B 2	UPLAND	5188		5188							0.98		
4	C	5A	730.75	730.78	U	N/A	I B 1	UPLAND	141		141							0.03		
4	C	5A	730.78	730.81	U	N/A	I B 3, II B 2	UPLAND	175		175							0.03		
4	C	WB-W	730.81	730.83	U	N/A	I B 3, II B 2	UPLAND	60		60									0.01
4	C	5A	730.83	730.84	U	N/A	I B 3, II B 2	UPLAND	87		87							0.02		
4	C	5A	730.84	730.91	U	N/A	I B 2, III A 3	UPLAND	363		363							0.07		
4	C	5A	730.91	730.92	PSS1/FO1B	SLOPE	I B 3, II B 2	WETLAND	43	43								0.01		
4	C	5A	730.92	730.93	PEM1B	SLOPE	III A 2	WETLAND	31	31								0.01		
4	C	5A	730.93	730.93	PSS1/FO1B	SLOPE	I B 3, II B 2	WETLAND	25	25								0.00		
4	C	5A	730.93	730.96	U	N/A	I B 3, III A 3	UPLAND	171		171							0.03		
4	C	5A	730.96	730.97	PEM1B	SLOPE	III A 2	WETLAND	26	26								0.00		
4	C	5A	730.97	731.34	U	N/A	I B 3, III A 3	UPLAND	1972		1972							0.37		
4	C	5A	731.34	731.35	PSS1/FO1B	SLOPE	I B 2, II B 2	WETLAND	46	46								0.01		
4	C	5A	731.35	731.35	U	N/A	I B 3, III A 3	UPLAND	26		26							0.00		
4	C	5A	731.35	731.38	PSS1/FO1B	SLOPE	I B 2, II B 2	WETLAND	110	110								0.02		
4	C	5A	731.38	731.40	U	N/A	I B 3, III A 3	UPLAND	155		155							0.03		
4	C	5A	731.40	731.67	U	N/A	I B 3, II B 2	UPLAND	1397		1397							0.26		
4	C	5A	731.67	731.69	PFO1/4B	SLOPE	I C 2, II C 2	WETLAND	109	109								0.02		
4	C	5A	731.69	731.78	U	N/A	I B 3, II B 2	UPLAND	499		499							0.09		
4	C	5A	731.78	732.57	U	N/A	I B 2, III A 2	UPLAND	4164		4164							0.79		
4	C	5A	732.57	732.61	PFO1/SS1B	SLOPE	I B 2, II B 2	WETLAND	207	207								0.04		
4	C	5A	732.61	732.78	PSS4/FO4B	FLAT - ORGANIC	II A 2, I A 2	WETLAND	868	868								0.16		
4	C	5A	732.78	732.79	PFO1/SS1B	SLOPE	I B 2, II B 2	WETLAND	51	51								0.01		
4	C	5A	732.79	732.80	U	N/A	I B 2, II C 2	UPLAND	66		66							0.01		
4	C	5A	732.80	732.82	U	N/A	I B 3, III A 2	UPLAND	112		112							0.02		
4	C	WB-W	732.82	732.84	U	N/A	I B 3, III A 2	UPLAND	90		90									0.02
4	C	5A	732.84	732.85	U	N/A	I B 3, III A 2	UPLAND	84		84							0.02		
4	C	5A	732.85	732.88	U	N/A	I C 2, II C 2	UPLAND	147		147							0.03		
4	C	5A	732.88	732.94	PSS1/4B	SLOPE	I C 3, II C 2	WETLAND	290	290								0.05		
4	C	5A	732.94	732.98	PEM1/SS1C	SLOPE	III A 2, II C 2	WETLAND	253	253								0.05		
4	C	5A	732.98	733.21	PSS1/4B	SLOPE	I C 3, II C 2	WETLAND	1216	1216								0.23		
4	C	5A	733.21	733.22	U	N/A	I C 2, II C 2	UPLAND	13		13							0.00		
4	C	5A	733.22	733.29	PSS1/4B	SLOPE	I C 3, II C 2	WETLAND	397	397								0.08		
4	C	5A	733.29	733.33	PEM1/SS1C	SLOPE	III A 2, II C 2	WETLAND	222	222								0.04		
4	C	5A	733.33	733.59	PSS1/4B	SLOPE	I C 3, II C 2	WETLAND	1348	1348								0.26		
4	C	5A	733.59	734.07	U	N/A	I C 2, II C 2	UPLAND	2536		2536							0.48		
4	C	5A	734.07	734.11	U	N/A	I B 2, III A 2	UPLAND	236		236							0.04		
4	C	5A	734.11	734.14	PEM1C	DEPRESSIONAL	II C 2, III A 2	WETLAND	111	111								0.02		
4	C	5A	734.14	734.16	U	N/A	I B 2, III A 2	UPLAND	136		136							0.03		
4	C	WB-W	734.16	734.17	U	N/A	I B 2, III A 2	UPLAND	57		57									0.01
4	C	WB-W	734.17	734.18	U	N/A	I C 2, II C 2	UPLAND	33		33									0.01
4	C	5A	734.18	734.18	U	N/A	I C 2, II C 2	UPLAND	13		13							0.00		
4	C	5A	734.18	734.23	U	N/A	I B 2, III A 2	UPLAND	279		279							0.05		
4	C	5A	734.23	734.25	U	N/A	I C 2, II C 2	UPLAND	95		95							0.02		
4	C	5A	734.25	734.28	PSS1/EM1B	SLOPE	II C 2, III A 3	WETLAND	138	138								0.03		
4	C	5A	734.28	734.29	PEM1E	SLOPE	III A 3	WETLAND	44	44								0.01		
4	C	5A	734.29	734.29	PSS1/EM1B	SLOPE	II C 2, III A 3	WETLAND	25	25								0.00		
4	C	5A	734.29	734.47	PFO4/1B	SLOPE	I C 2, II C 2	WETLAND	952	952								0.18		
4	C	5A	734.47	734.52	U	N/A	I C 2, II B 2	UPLAND	269		269							0.05		
4	C	5A	734.52	734.58	PFO4/1B	SLOPE	I C 2, II C 2	WETLAND	308	308								0.06		
4	C	5A	734.58	734.66	PFO1/4B	SLOPE	I C 3, II B 2	WETLAND	420	420								0.08		
4	C	5A	734.66	734.86	U	N/A	I B 3, II B 2	UPLAND	1082		1082							0.21		
4	C	5A	734.86	734.89	PFO1/4B	SLOPE	I C 3, II B 2	WETLAND	111	111								0.02		
4	C	5A	734.89	734.92	PEM1E	SLOPE	III A 2	WETLAND	190	190								0.04		
4	C	5A	734.92	734.93	PFO1/4B	SLOPE	I C 3, II B 2	WETLAND	64	64								0.01		
4	C	5A	734.93	734.97	U	N/A	I B 2, II B 2	UPLAND	196		196							0.04		
4	C	5A	734.97	734.98	U	N/A	I B 2, II B 2	UPLAND	34		34							0.01		
4	C	5A	734.98	735.00	PFO4/1B	SLOPE	I C 2, II B 2	WETLAND	100	100								0.02		
4	C	5A	735.00	735.00	PFO1/4B	SLOPE	I C 2, II C 2	WETLAND	6	6								0.00		
4	C	5A	735.00	735.02	U	N/A	I B 2, II C 2	UPLAND	143		143							0.03		
4	C	5A	735.02	735.03	PFO1/4B	SLOPE	I C 2, II C 2	WETLAND	31	31								0.01		
4	C	5A	735.03	735.07	U	N/A	I C 2, II B 2	UPLAND	202		202							0.04		
4	C	5A	735.07	735.08	PFO1/4B	SLOPE	I C 2, II B 2	WETLAND	66	66								0.01		
4	C	5A	735.08	735.11	U	N/A	I C 2, II C 2	UPLAND	151		151							0.03		

SPREAD	SECTION	ROW MODE	FROM MP	TO MP	NWI CODE	HGM CLASS	VIERECK	DESCRIPTION	LINEAR FEET	WETLAND FEET	UPLAND FEET	DISTURBED FEET	Comments	Mode 1 - Ice Workpad (miles)	Mode 2 - Frost Pack (miles)	Mode 3 - Timber Mats	Mode 4 - Granular Workpad	Mode 5A - Grade	Mode 5B - Mountain Grade	Stream & Flood Plain Crossings
4	C	WB-W	735.11	735.12	U	N/A	I C 2, II C 2	UPLAND	60		60									0.01
4	C	5A	735.12	735.16	U	N/A	I C 2, II C 2	UPLAND	220		220							0.04		
4	C	5A	735.16	735.17	PFO1/4B	SLOPE	I C 2, II C 2	WETLAND	60	60								0.01		
4	C	5A	735.17	735.18	U	N/A	I C 2, II C 2	UPLAND	50		50							0.01		
4	C	5A	735.18	735.30	PFO1/4B	SLOPE	I C 2, II C 2	WETLAND	594	594								0.11		
4	C	5A	735.30	735.35	U	N/A	I C 2, II B 2	UPLAND	303		303							0.06		
4	C	5A	735.35	735.42	PFO1/4B	SLOPE	I C 2, II B 2	WETLAND	351	351								0.07		
4	C	5A	735.42	735.44	U	N/A	I C 2, II C 2	UPLAND	102		102							0.02		
4	C	5A	735.44	735.44	PFO1/4B	SLOPE	I C 2, II B 2	WETLAND	30	30								0.01		
4	C	5A	735.44	735.45	U	N/A	I C 2, II C 2	UPLAND	33		33							0.01		
4	C	5A	735.45	735.46	PFO1/4B	SLOPE	I C 2, II B 2	WETLAND	28	28								0.01		
4	C	5A	735.46	735.49	U	N/A	I C 2, II C 2	UPLAND	194		194							0.04		
4	C	5A	735.49	735.51	PFO1/4B	SLOPE	I C 2, II B 2	WETLAND	66	66								0.01		
4	C	5A	735.51	735.52	U	N/A	I C 2, II B 2	UPLAND	52		52							0.01		
4	C	5A	735.52	735.53	PFO1/4B	SLOPE	I C 2, II B 2	WETLAND	59	59								0.01		
4	C	5A	735.53	735.55	U	N/A	I C 2, II B 2	UPLAND	141		141							0.03		
4	C	5A	735.55	735.56	PFO1/4B	SLOPE	I C 2, II B 2	WETLAND	28	28								0.01		
4	C	5A	735.56	735.58	U	N/A	I C 2, II B 2	UPLAND	93		93							0.02		
4	C	5A	735.58	735.58	PFO1/4B	SLOPE	I C 2, II B 2	WETLAND	18	18								0.00		
4	C	5A	735.58	735.62	U	N/A	I C 2, II B 2	UPLAND	214		214							0.04		
4	C	5A	735.62	735.63	PSS1/EM1B	SLOPE	II B 2, III A 2	WETLAND	71	71								0.01		
4	C	5A	735.63	735.67	U	N/A	I C 2, II B 2	UPLAND	195		195							0.04		
4	C	5A	735.67	735.69	PSS1/EM1B	SLOPE	II B 2, III A 2	WETLAND	96	96								0.02		
4	C	5A	735.69	735.99	U	N/A	I C 2, II B 2	UPLAND	1591		1591							0.30		
4	C	5A	735.99	736.00	U	N/A	I B 3, II B 2	UPLAND	31		31							0.01		
4	C	WB-W	736.00	736.01	U	N/A	I B 3, II B 2	UPLAND	52		52									0.01
4	C	WB-W	736.01	736.01	PFO1/SS1B	SLOPE	I B 2, II B 2	WETLAND	38	38										0.01
4	C	5A	736.01	736.04	PFO1/SS1B	SLOPE	I B 2, II B 2	WETLAND	165	165								0.03		
4	C	5A	736.04	736.07	PFO1/4B	SLOPE	I C 2, II B 2	WETLAND	138	138								0.03		
4	C	5A	736.07	736.09	U	N/A	I B 2, III A 2	UPLAND	98		98							0.02		
4	C	5A	736.09	736.11	PFO1/4B	SLOPE	I C 2, II B 2	WETLAND	133	133								0.03		
4	C	5A	736.11	736.13	U	N/A	I C 2, II B 2	UPLAND	97		97							0.02		
4	C	5A	736.13	736.16	PFO1/4B	SLOPE	I C 2, II B 2	WETLAND	123	123								0.02		
4	C	5A	736.16	736.21	U	N/A	I C 2, II B 2	UPLAND	277		277							0.05		
4	C	5A	736.21	736.21	PFO1/4B	SLOPE	I C 2, II B 2	WETLAND	13	13								0.00		
4	C	5A	736.21	736.98	U	N/A	I C 2, II B 2	UPLAND	4055		4055							0.77		
4	C	WB-W	736.98	737.00	U	N/A	I C 2, II B 2	UPLAND	90		90									0.02
4	C	5A	737.00	737.01	U	N/A	I C 2, II B 2	UPLAND	89		89							0.02		
4	C	5A	737.01	737.04	PFO1/4B	SLOPE	I C 2, II C 2	WETLAND	143	143								0.03		
4	C	5A	737.04	737.08	U	N/A	I C 2, II B 2	UPLAND	188		188							0.04		
4	C	WB-W	737.08	737.09	U	N/A	I C 2, II B 2	UPLAND	90		90									0.02
4	C	5A	737.09	737.17	U	N/A	I C 2, II B 2	UPLAND	390		390							0.07		
4	C	WB-W	737.17	737.18	U	N/A	I C 2, II B 2	UPLAND	90		90									0.02
4	C	5A	737.18	737.29	U	N/A	I C 2, II B 2	UPLAND	543		543							0.10		
4	C	5A	737.29	737.29	PFO1B	SLOPE	I A 3, III A 2	WETLAND	43	43								0.01		
4	C	5A	737.29	737.36	U	N/A	I B 2, III A 2	UPLAND	351		351							0.07		
4	C	5A	737.36	737.38	PFO1B	SLOPE	I A 3, III A 2	WETLAND	97	97								0.02		
4	C	5A	737.38	737.38	U	N/A	I B 3, III A 2	UPLAND	16		16							0.00		
4	C	WB-W	737.38	737.40	U	N/A	I B 3, III A 2	UPLAND	90		90									0.02
4	C	5A	737.40	737.46	U	N/A	I B 3, III A 2	UPLAND	345		345							0.07		
4	C	5A	737.46	737.63	U	N/A	II B 2, III A 2	UPLAND	886		886							0.17		
4	C	5A	737.63	737.69	PEM1/SS1B	SLOPE	II B 2, III A 2	WETLAND	324	324								0.06		
4	C	5A	737.69	737.76	U	N/A	II B 2, III A 2	UPLAND	343		343							0.06		
4	C	5A	737.76	737.76	PEM1/SS1B	SLOPE	II B 2, III A 2	WETLAND	30	30								0.01		
4	C	5A	737.76	737.78	U	N/A	II B 2, III A 2	UPLAND	68		68							0.01		
4	C	5A	737.78	737.91	U	N/A	I B 3, III A 2	UPLAND	707		707							0.13		
4	C	5A	737.91	738.62	PFO1/SS1B	SLOPE	I B 2, II B 2	WETLAND	3718	3718								0.70		
4	C	5A	738.62	738.65	PFO4B	SLOPE	I A 2, II B 2	WETLAND	181	181								0.03		
4	C	5A	738.65	738.70	PFO1/SS1B	SLOPE	I B 2, II B 2	WETLAND	257	257								0.05		
4	C	5A	738.70	738.72	U	N/A	I B 2, II B 2	UPLAND	119		119							0.02		
4	C	5A	738.72	738.89	PFO1/SS1B	SLOPE	I B 2, II B 2	WETLAND	893	893								0.17		
4	C	5A	738.89	738.90	PSS1/EM1Eb	SLOPE	II C 2, III A 3	WETLAND	47	47								0.01		
4	C	4	738.90	738.90	PSS1/EM1Eb	SLOPE	II C 2, III A 3	WETLAND	19	19							0.00			
4	C	4	738.90	738.91	PUBHb	DEPRESSIONAL	NONE	WETLAND	51	51							0.01			
4	C	4	738.91	738.92	PSS1/EM1Eb	SLOPE	II C 2, III A 3	WETLAND	21	21							0.00			
4	C	4	738.92	738.92	PUBHb	DEPRESSIONAL	NONE	WETLAND	2	2							0.00			
4	C	4	738.92	738.93	PSS1/EM1Eb	SLOPE	II C 2, III A 3	WETLAND	47	47							0.01			
4	C	4	738.93	738.94	PUBHb	DEPRESSIONAL	NONE	WETLAND	72	72							0.01			
4	C	4	738.94	738.95	PSS1/EM1Eb	SLOPE	II C 2, III A 3	WETLAND	66	66							0.01			
4	C	4	738.95	738.97	PUBHb	DEPRESSIONAL	NONE	WETLAND	101	101							0.02			
4	C	4	738.97	738.98	PSS1/EM1Eb	SLOPE	II C 2, III A 3	WETLAND	71	71							0.01			
4	C	5A	738.98	738.99	PSS1/EM1Eb	SLOPE	II C 2, III A 3	WETLAND	7	7								0.00		

SPREAD	SECTION	ROW MODE	FROM MP	TO MP	NWI CODE	HGM CLASS	VIERECK	DESCRIPTION	LINEAR FEET	WETLAND FEET	UPLAND FEET	DISTURBED FEET	Comments	Mode 1 - Ice Workpad (miles)	Mode 2 - Frost Pack (miles)	Mode 3 - Timber Mats	Mode 4 - Granular Workpad	Mode 5A - Grade	Mode 5B - Mountain Grade	Stream & Flood Plain Crossings
4	C	5A	738.99	739.08	PFO1/SS1B	SLOPE	I B 2, II B 2	WETLAND	514	514								0.10		
4	C	5A	739.08	739.10	PSS1B	SLOPE	II C 2	WETLAND	93	93								0.02		
4	C	5A	739.10	739.25	PFO1/SS1B	SLOPE	I B 2, II B 2	WETLAND	792	792								0.15		
4	C	5A	739.25	739.27	PSS1/EM1C	SLOPE	II C 2, III A 3	WETLAND	102	102								0.02		
4	C	5A	739.27	739.33	PFO1/SS1B	SLOPE	I B 2, II B 2	WETLAND	311	311								0.06		
4	C	5A	739.33	739.34	PFO4/1A	FLAT - ORGANIC	I C 1	WETLAND	39	39								0.01		
4	C	5A	739.34	739.43	PFO1/SS1B	SLOPE	I B 2, II B 2	WETLAND	492	492								0.09		
4	C	5A	739.43	739.43	PFO4/1A	SLOPE	I C 2, II C 2	WETLAND	23	23								0.00		
4	C	5A	739.43	739.46	PFO4B	FLAT - ORGANIC	I A 2, II C 2	WETLAND	114	114								0.02		
4	C	5A	739.46	739.46	PFO4B	SLOPE	I A 2, II C 2	WETLAND	4	4								0.00		
4	C	5A	739.46	739.48	PFO4/1A	SLOPE	I C 2, II C 2	WETLAND	102	102								0.02		
4	C	5A	739.48	739.53	PFO4B	FLAT - ORGANIC	I A 2, II C 2	WETLAND	300	300								0.06		
4	C	5A	739.53	739.55	PFO4/1A	SLOPE	I C 2, II C 2	WETLAND	82	82								0.02		
4	C	5A	739.55	739.71	PFO1/SS1B	SLOPE	I B 2, II B 2	WETLAND	875	875								0.17		
4	C	5A	739.71	739.72	U	N/A	II B 2, III A 2	UPLAND	20		20							0.00		
4	C	WB-W	739.72	739.73	U	N/A	II B 2, III A 2	UPLAND	67		67									0.01
4	C	WB-W	739.73	739.73	PFO1/SS1B	SLOPE	I B 2, II B 2	WETLAND	23	23										0.00
4	C	5A	739.73	739.80	PFO1/SS1B	SLOPE	I B 2, II B 2	WETLAND	345	345								0.07		
4	C	5A	739.80	739.89	PFO4/SS4B	FLAT - ORGANIC	I A 2, II A 2	WETLAND	458	458								0.09		
4	C	5A	739.89	740.18	PFO1/SS1B	SLOPE	I B 2, II B 2	WETLAND	1537	1537								0.29		
4	C	WB-W	740.18	740.19	PFO1/SS1B	SLOPE	I B 2, II B 2	WETLAND	49	49										0.01
4	C	WB-W	740.19	740.19	U	N/A	I C 2, II C 2	UPLAND	11		11									0.00
4	C	5A	740.19	740.38	U	N/A	I C 2, II C 2	UPLAND	990		990							0.19		
4	C	WB-W	740.38	740.39	U	N/A	I C 2, II C 2	UPLAND	90		90									0.02
4	C	5A	740.39	740.47	U	N/A	I C 2, II C 2	UPLAND	389		389							0.07		
4	C	5A	740.47	740.47	PFO1/SS1B	SLOPE	I B 2, II B 2	WETLAND	31	31								0.01		
4	C	WB-W	740.47	740.48	PFO1/SS1B	SLOPE	I B 2, II B 2	WETLAND	19	19										0.00
4	C	WB-W	740.48	740.49	U	N/A	I C 2, II C 2	UPLAND	71		71									0.01
4	C	5A	740.49	740.64	U	N/A	I C 2, II C 2	UPLAND	796		796							0.15		
4	C	5A	740.64	740.66	PFO1/SS1B	SLOPE	I B 2, II B 2	WETLAND	88	88								0.02		
4	C	5A	740.66	740.70	U	N/A	I C 2, II C 2	UPLAND	225		225							0.04		
4	C	5A	740.70	740.71	PFO1/SS1B	SLOPE	I B 2, II B 2	WETLAND	57	57								0.01		
4	C	5A	740.71	740.83	U	N/A	I C 2, II C 2	UPLAND	609		609							0.12		
4	C	5A	740.83	740.84	PSS1/FO1C	SLOPE	II B 2, I B 3	WETLAND	88	88								0.02		
4	C	5A	740.84	740.85	U	N/A	I C 2, II C 2	UPLAND	50		50							0.01		
4	C	5A	740.85	740.85	PSS1/FO1C	SLOPE	II B 2, I B 3	WETLAND	6	6								0.00		
4	C	WB-W	740.85	740.86	PSS1/FO1C	SLOPE	II B 2, I B 3	WETLAND	57	57										0.01
4	C	WB-W	740.86	740.86	U	N/A	I C 2, II C 2	UPLAND	2		2									0.00
4	C	5A	740.86	741.03	U	N/A	I C 2, II C 2	UPLAND	856		856							0.16		
4	D	5A	741.03	741.03	PSS1/FO1C	SLOPE	II B 2, I B 3	WETLAND	15	15								0.00		
4	D	5A	741.03	741.05	PFO1/SS1B	SLOPE	I B 2, II B 2	WETLAND	119	119								0.02		
4	D	WB-W	741.05	741.06	PFO1/SS1B	SLOPE	I B 2, II B 2	WETLAND	60	60										0.01
4	D	5A	741.06	741.06	PFO1/SS1B	SLOPE	I B 2, II B 2	WETLAND	1	1								0.00		
4	D	5A	741.06	741.35	U	N/A	I C 2, II C 2	UPLAND	1487		1487							0.28		
4	D	5A	741.35	741.35	PFO1/SS1B	SLOPE	I B 2, II B 2	WETLAND	42	42								0.01		
4	D	WB-W	741.35	741.37	PFO1/SS1B	SLOPE	I B 2, II B 2	WETLAND	90	90										0.02
4	D	5A	741.37	741.38	PFO1/SS1B	SLOPE	I B 2, II B 2	WETLAND	43	43								0.01		
4	D	5A	741.38	741.41	U	N/A	I C 2, II C 2	UPLAND	161		161							0.03		
4	D	5A	741.41	741.44	PFO1/SS1B	SLOPE	I B 2, II B 2	WETLAND	186	186								0.04		
4	D	5A	741.44	741.48	U	N/A	I C 2, II C 2	UPLAND	213		213							0.04		
4	D	5A	741.48	741.49	PFO1/SS1B	SLOPE	I B 2, II B 2	WETLAND	42	42								0.01		
4	D	5A	741.49	741.92	U	N/A	I C 2, II C 2	UPLAND	2256		2256							0.43		
4	D	5A	741.92	741.93	PSS1/FO1C	SLOPE	II B 2, I B 3	WETLAND	37	37								0.01		
4	D	5A	741.93	742.02	U	N/A	I C 2, II C 2	UPLAND	485		485							0.09		
4	D	5A	742.02	742.04	PFO1/4B	SLOPE	I C 2, II B 2	WETLAND	101	101								0.02		
4	D	5A	742.04	742.76	U	N/A	I C 2, II C 2	UPLAND	3822		3822							0.72		
4	D	5A	742.76	742.77	PFO1/4B	SLOPE	I C 2, II B 2	WETLAND	36	36								0.01		
4	D	5A	742.77	742.81	U	N/A	I C 2, II C 2	UPLAND	225		225							0.04		
4	D	5A	742.81	742.97	PFO1/4B	SLOPE	I C 2, II B 2	WETLAND	843	843								0.16		
4	D	5A	742.97	742.99	U	N/A	I C 2, II C 2	UPLAND	97		97							0.02		
4	D	5A	742.99	743.15	PFO1/4B	SLOPE	I C 2, II B 2	WETLAND	849	849								0.16		
4	D	5A	743.15	743.18	U	N/A	I C 2, II B 2	UPLAND	176		176							0.03		
4	D	5A	743.18	743.25	PFO1/4B	SLOPE	I C 2, II B 2	WETLAND	359	359								0.07		
4	D	5A	743.25	743.35	PFO4B	FLAT - ORGANIC	I A 2, II C 2	WETLAND	510	510								0.10		
4	D	5A	743.35	743.37	U	N/A	I C 2, II C 2	UPLAND	138		138							0.03		
4	D	5A	743.37	743.39	PFO1/4B	SLOPE	I C 2, II C 2	WETLAND	103	103								0.02		
4	D	5A	743.39	743.40	U	N/A	I C 2, II C 2	UPLAND	43		43							0.01		
4	D	5A	743.40	743.45	PFO4B	FLAT - ORGANIC	I A 2, II C 2	WETLAND	271	271								0.05		
4	D	5A	743.45	743.47	PFO4/1B	FLAT - ORGANIC	I C 1, II C 2	WETLAND	76	76								0.01		
4	D	5A	743.47	743.48	U	N/A	I C 2, II C 2	UPLAND	89		89							0.02		
4	D	WB-W	743.48	743.50	U	N/A	I C 2, II C 2	UPLAND	102		102									0.02
4	D	WB-W	743.50	743.51	PFO4/SS4B	FLAT - ORGANIC	I A 2, II A 2	WETLAND	20	20										0.00

SPREAD	SECTION	ROW MODE	FROM MP	TO MP	NWI CODE	HGM CLASS	VIERECK	DESCRIPTION	LINEAR FEET	WETLAND FEET	UPLAND FEET	DISTURBED FEET	Comments	Mode 1 - Ice Workpad (miles)	Mode 2 - Frost Pack (miles)	Mode 3 - Timber Mats	Mode 4 - Granular Workpad	Mode 5A - Grade	Mode 5B - Mountain Grade	Stream & Flood Plain Crossings
4	D	5A	743.51	743.55	PFO4/SS4B	FLAT - ORGANIC	I A 2, II A 2	WETLAND	203	203								0.04		
4	D	5A	743.55	743.61	U	N/A	I C 2, II C 2	UPLAND	350		350							0.07		
4	D	5A	743.61	743.62	PFO4/1B	SLOPE	I C 1, II C 2	WETLAND	43	43								0.01		
4	D	5A	743.62	743.64	PFO4/SS4B	SLOPE	I A 2, II A 2	WETLAND	85	85								0.02		
4	D	5A	743.64	743.67	PSS1E	SLOPE	II C 2, III A 3	WETLAND	173	173								0.03		
4	D	5A	743.67	743.69	PFO4/SS4B	SLOPE	I A 2, II A 2	WETLAND	96	96								0.02		
4	D	5A	743.69	743.72	PFO4/SS4B	FLAT - ORGANIC	I A 2, II A 2	WETLAND	152	152								0.03		
4	D	5A	743.72	744.03	U	N/A	I C 2, II C 2	UPLAND	1646		1646							0.31		
4	D	5A	744.03	744.07	PFO4/1B	SLOPE	I C 2, II C 2	WETLAND	228	228								0.04		
4	D	5A	744.07	744.10	PSS1/EM1E	RIVERINE	II C 2, III A 2	WETLAND	175	175								0.03		
4	D	WB-W	744.10	744.12	PSS1/EM1E	RIVERINE	II C 2, III A 2	WETLAND	90	90										0.02
4	D	5A	744.12	744.12	PSS1/EM1E	RIVERINE	II C 2, III A 2	WETLAND	9	9								0.00		
4	D	5A	744.12	744.31	U	N/A	I C 2, II C 2	UPLAND	980		980							0.19		
4	D	5A	744.31	744.35	PFO4B	FLAT - ORGANIC	I A 2	WETLAND	246	246								0.05		
4	D	5A	744.35	744.37	PFO1/4B	SLOPE	I C 2, II B 2	WETLAND	81	81								0.02		
4	D	5A	744.37	744.41	U	N/A	I C 2, II C 2	UPLAND	194		194							0.04		
4	D	5A	744.41	744.65	PFO1/4B	SLOPE	I C 2, II B 2	WETLAND	1259	1259								0.24		
4	D	5A	744.65	744.68	PFO4/SS4B	SLOPE	I A 2, II C 2	WETLAND	202	202								0.04		
4	D	5A	744.68	744.73	PFO1/4B	SLOPE	I C 2, II B 2	WETLAND	245	245								0.05		
4	D	5A	744.73	744.77	PFO4B	SLOPE	I A 2, II C 2	WETLAND	229	229								0.04		
4	D	5A	744.77	744.82	PFO1/4B	SLOPE	I C 2, II B 2	WETLAND	238	238								0.05		
4	D	5A	744.82	745.26	U	N/A	I C 2, II B 2	UPLAND	2334		2334							0.44		
4	D	5A	745.26	745.39	U	N/A	I C 2, III A 2	UPLAND	701		701							0.13		
4	D	WB-W	745.39	745.41	U	N/A	I C 2, III A 2	UPLAND	90		90									0.02
4	D	5A	745.41	745.51	U	N/A	I C 2, III A 2	UPLAND	545		545							0.10		
4	D	5A	745.51	745.56	U	N/A	I B 3, II B 2	UPLAND	235		235							0.04		
4	D	WB-W	745.56	745.56	U	N/A	I B 3, II B 2	UPLAND	31		31									0.01
4	D	WB-W	745.56	745.58	R3UB/USH	RIVERINE	NONE	WETLAND	99	99										0.02
4	D	WB-W	745.58	745.59	U	N/A	I B 2, II B 2	UPLAND	50		50									0.01
4	D	5A	745.59	745.61	U	N/A	I B 2, II B 2	UPLAND	105		105							0.02		
4	D	5A	745.61	745.70	U	N/A	I C 3, III A 2	UPLAND	438		438							0.08		
4	D	5A	745.70	745.73	U	N/A	I B 2, II B 2	UPLAND	176		176							0.03		
4	D	WB-W	745.73	745.73	U	N/A	I B 2, II B 2	UPLAND	24		24									0.00
4	D	WB-W	745.73	745.74	R3UBH	RIVERINE	NONE	WETLAND	14	14										0.00
4	D	WB-W	745.74	745.75	U	N/A	I B 3, III A 2	UPLAND	53		53									0.01
4	D	5A	745.75	745.77	U	N/A	I B 3, III A 2	UPLAND	110		110							0.02		
4	D	5A	745.77	745.82	U	N/A	I B 2, II B 2	UPLAND	261		261							0.05		
4	D	5A	745.82	745.82	PEM1C	SLOPE	III A 2	WETLAND	14	14								0.00		
4	D	5A	745.82	745.87	U	N/A	I B 2, II B 2	UPLAND	247		247							0.05		
4	D	5A	745.87	745.87	PEM1C	SLOPE	III A 2, II C 2	WETLAND	24	24								0.00		
4	D	5A	745.87	745.93	U	N/A	I C 3, II B 2	UPLAND	336		336							0.06		
4	D	5A	745.93	745.99	U	N/A	I C 3, II B 2	UPLAND	299		299							0.06		
4	D	5A	745.99	746.00	PEM1/SS1C	RIVERINE	III A 2, II B 2	WETLAND	55	55								0.01		
4	D	5A	746.00	746.02	PFO1/4B	SLOPE	I C 2, II B 2	WETLAND	77	77								0.01		
4	D	5A	746.02	746.03	PSS1/FO1B	SLOPE	I B 3, II B 2	WETLAND	66	66								0.01		
4	D	5A	746.03	746.08	U	N/A	I C 2, II B 2	UPLAND	261		261							0.05		
4	D	5A	746.08	746.09	PSS1/FO1B	SLOPE	I C 3, II B 2	WETLAND	85	85								0.02		
4	D	5A	746.09	746.10	U	N/A	I C 3, II B 2	UPLAND	49		49							0.01		
4	D	5A	746.10	746.11	PSS1/FO1B	SLOPE	I C 3, II B 2	WETLAND	16	16								0.00		
4	D	5A	746.11	746.12	U	N/A	I C 3, II B 2	UPLAND	68		68							0.01		
4	D	5A	746.12	746.18	PFO1/4B	SLOPE	I C 2, II B 2	WETLAND	334	334								0.06		
4	D	5A	746.18	746.21	PFO4B	FLAT - ORGANIC	I A 2, II C 2	WETLAND	161	161								0.03		
4	D	5A	746.21	746.26	PFO1/4B	FLAT - ORGANIC	I C 2, II C 2	WETLAND	273	273								0.05		
4	D	5A	746.26	746.27	PFO4B	FLAT - ORGANIC	I A 2, II C 2	WETLAND	18	18								0.00		
4	D	5A	746.27	746.27	PFO1/4B	FLAT - ORGANIC	I C 2, II C 2	WETLAND	37	37								0.01		
4	D	5A	746.27	746.30	PFO4B	FLAT - ORGANIC	I A 2, II C 2	WETLAND	122	122								0.02		
4	D	5A	746.30	746.31	PSS4/1B	FLAT - ORGANIC	II A 2, II C 2	WETLAND	83	83								0.02		
4	D	5A	746.31	746.32	PFO4B	SLOPE	I A 2, II C 2	WETLAND	38	38								0.01		
4	D	5A	746.32	746.34	PFO1/4B	FLAT - ORGANIC	I C 2, II C 2	WETLAND	120	120								0.02		
4	D	5A	746.34	746.42	PFO4B	SLOPE	I A 2, II C 2	WETLAND	423	423								0.08		
4	D	5A	746.42	746.43	PFO1/4B	SLOPE	I C 2, II B 2	WETLAND	44	44								0.01		
4	D	5A	746.43	746.45	U	N/A	I C 2, II B 2	UPLAND	98		98							0.02		
4	D	5A	746.45	746.46	PFO1/4B	SLOPE	I C 2, II B 2	WETLAND	31	31								0.01		
4	D	5A	746.46	746.54	U	N/A	I C 2, II B 2	UPLAND	426		426							0.08		
4	D	5A	746.54	746.56	PFO1/4B	SLOPE	I C 2, II B 2	WETLAND	121	121								0.02		
4	D	5A	746.56	746.65	U	N/A	I C 2, II B 2	UPLAND	471		471							0.09		
4	D	5A	746.65	746.66	PFO1/4B	SLOPE	I C 2, II B 2	WETLAND	42	42								0.01		
4	D	5A	746.66	746.69	U	N/A	I B 2, II B 2	UPLAND	150		150							0.03		
4	D	5A	746.69	746.69	PFO1/4B	SLOPE	I C 2, II B 2	WETLAND	48	48								0.01		
4	D	5A	746.69	746.76	U	N/A	I C 2, II B 2	UPLAND	365		365							0.07		
4	D	5A	746.76	746.77	PFO1/4B	SLOPE	I C 2, II B 2	WETLAND	25	25								0.00		
4	D	WB-S	746.77	746.79	PFO1/4B	SLOPE	I C 2, II B 2	WETLAND	90	90										0.02

SPREAD	SECTION	ROW MODE	FROM MP	TO MP	NWI CODE	HGM CLASS	VIERECK	DESCRIPTION	LINEAR FEET	WETLAND FEET	UPLAND FEET	DISTURBED FEET	Comments	Mode 1 - Ice Workpad (miles)	Mode 2 - Frost Pack (miles)	Mode 3 - Timber Mats	Mode 4 - Granular Workpad	Mode 5A - Grade	Mode 5B - Mountain Grade	Stream & Flood Plain Crossings
4	D	5A	746.79	746.79	PFO1/4B	SLOPE	I C 2, II B 2	WETLAND	10	10								0.00		
4	D	5A	746.79	747.05	U	N/A	I C 2, II B 2	UPLAND	1377		1377							0.26		
4	D	5A	747.05	747.06	PFO1/4B	SLOPE	I C 3, II B 2	WETLAND	88	88								0.02		
4	D	5A	747.06	747.07	PSS1/FO4B	SLOPE	II B 2, II C 2	WETLAND	48	48								0.01		
4	D	5A	747.07	747.21	PFO1/4B	SLOPE	I C 3, II B 2	WETLAND	726	726								0.14		
4	D	5A	747.21	747.23	U	N/A	I C 2, II B 2	UPLAND	88		88							0.02		
4	D	5A	747.23	747.27	PFO1/4B	SLOPE	I C 3, II B 2	WETLAND	212	212								0.04		
4	D	5A	747.27	747.30	U	N/A	I C 2, II B 2	UPLAND	192		192							0.04		
4	D	5A	747.30	747.32	PFO4B	FLAT - ORGANIC	I A 2, II C 2	WETLAND	98	98								0.02		
4	D	5A	747.32	747.33	PSS1/4B	FLAT - ORGANIC	II C 2, II A 3	WETLAND	19	19								0.00		
4	D	5A	747.33	747.34	PFO4B	FLAT - ORGANIC	I A 2, II C 2	WETLAND	63	63								0.01		
4	D	5A	747.34	747.36	PSS1/4B	FLAT - ORGANIC	II C 2, II A 3	WETLAND	132	132								0.02		
4	D	5A	747.36	747.38	PFO4B	FLAT - ORGANIC	I A 2, II C 2	WETLAND	62	62								0.01		
4	D	5A	747.38	747.38	PFO1/4B	SLOPE	I C 3, II B 2	WETLAND	21	21								0.00		
4	D	5A	747.38	747.39	U	N/A	I C 2, II B 2	UPLAND	72		72							0.01		
4	D	5A	747.39	747.41	PFO1/4B	SLOPE	I C 3, II B 2	WETLAND	92	92								0.02		
4	D	WB-S	747.41	747.42	PFO1/4B	SLOPE	I C 3, II B 2	WETLAND	60	60										0.01
4	D	5A	747.42	747.51	PFO1/4B	SLOPE	I C 3, II B 2	WETLAND	484	484								0.09		
4	D	5A	747.51	747.54	U	N/A	I C 2, II B 2	UPLAND	124		124							0.02		
4	D	5A	747.54	747.54	PFO1/4B	SLOPE	I C 3, II B 2	WETLAND	32	32								0.01		
4	D	5A	747.54	747.57	U	N/A	I C 2, II B 2	UPLAND	129		129							0.02		
4	D	5A	747.57	747.57	PFO1/4B	SLOPE	I C 3, II B 2	WETLAND	39	39								0.01		
4	D	5A	747.57	747.58	U	N/A	I C 2, II B 2	UPLAND	15		15							0.00		
4	D	5A	747.58	747.58	PFO1/4B	SLOPE	I C 3, II B 2	WETLAND	26	26								0.01		
4	D	5A	747.58	747.59	U	N/A	I C 2, II B 2	UPLAND	45		45							0.01		
4	D	5A	747.59	747.60	PFO1/4B	SLOPE	I C 3, II B 2	WETLAND	69	69								0.01		
4	D	5A	747.60	747.66	U	N/A	I C 2, II B 2	UPLAND	273		273							0.05		
4	D	5A	747.66	747.66	PFO1/4B	SLOPE	I C 3, II B 2	WETLAND	35	35								0.01		
4	D	5A	747.66	747.74	U	N/A	I C 2, II B 2	UPLAND	398		398							0.08		
4	D	5A	747.74	747.75	PFO1/4B	SLOPE	I C 3, II B 2	WETLAND	48	48								0.01		
4	D	5A	747.75	747.83	U	N/A	I C 2, II B 2	UPLAND	464		464							0.09		
4	D	5A	747.83	747.93	PFO1/4B	SLOPE	I C 3, II B 2	WETLAND	500	500								0.09		
4	D	5A	747.93	747.94	U	N/A	I C 2, II B 2	UPLAND	71		71							0.01		
4	D	5A	747.94	747.98	PFO1/4B	SLOPE	I C 3, II B 2	WETLAND	195	195								0.04		
4	D	5A	747.98	747.99	U	N/A	I C 2, II B 2	UPLAND	51		51							0.01		
4	D	5A	747.99	748.04	PFO1/4B	SLOPE	I C 3, II B 2	WETLAND	259	259								0.05		
4	D	5A	748.04	748.08	U	N/A	I C 2, II B 2	UPLAND	196		196							0.04		
4	D	5A	748.08	748.08	PFO4/1B	SLOPE	I C 2, II C 2	WETLAND	33	33								0.01		
4	D	5A	748.08	748.43	U	N/A	I C 2, II B 2	UPLAND	1857		1857							0.35		
4	D	5A	748.43	748.44	U	N/A	I B 1	UPLAND	16		16							0.00		
4	D	5A	748.44	748.44	PSS1A	RIVERINE	II B 2, II C 2	WETLAND	20	20								0.00		
4	D	5A	748.44	748.45	U	N/A	I B 1	UPLAND	73		73							0.01		
4	D	5A	748.45	748.47	PSS1A	RIVERINE	II B 2, II C 2	WETLAND	82	82								0.02		
4	D	5A	748.47	748.50	R3USC	RIVERINE	NONE	WETLAND	134	134								0.03		
4	D	WB-S	748.50	748.53	R3USC	RIVERINE	NONE	WETLAND	168	168										0.03
4	D	WB-S	748.53	748.53	R3UBH	RIVERINE	NONE	WETLAND	28	28										0.01
4	D	WB-S	748.53	748.54	R3USC	RIVERINE	NONE	WETLAND	34	34										0.01
4	D	WB-S	748.54	748.55	R3UBH	RIVERINE	NONE	WETLAND	80	80										0.02
4	D	WB-S	748.55	748.56	U	N/A	I B 2, II B 2	UPLAND	50		50									0.01
4	D	5A	748.56	748.62	U	N/A	I B 2, II B 2	UPLAND	293		293							0.06		
4	D	5A	748.62	748.65	U	N/A	I C 2, II C 2	UPLAND	140		140							0.03		
4	D	5A	748.65	748.92	PFO4/1B	SLOPE	I C 2, II C 2	WETLAND	1461	1461								0.28		
4	D	5A	748.92	749.23	U	N/A	I C 2, II C 2	UPLAND	1637		1637							0.31		
4	D	5A	749.23	749.24	D	N/A	NONE	DISTURBED	46			46						0.01		
4	D	5A	749.24	749.24	PFO4/1B	SLOPE	I C 2, II C 2	WETLAND	19	19								0.00		
4	D	5A	749.24	749.26	U	N/A	I C 2, II C 2	UPLAND	76		76							0.01		
4	D	5A	749.26	749.28	PFO4/1B	SLOPE	I C 2, II C 2	WETLAND	91	91								0.02		
4	D	5A	749.28	749.34	PFO4B	FLAT - ORGANIC	I A 2	WETLAND	354	354								0.07		
4	D	5A	749.34	749.42	U	N/A	I C 2, II C 2	UPLAND	385		385							0.07		
4	D	5A	749.42	749.45	PFO4/1B	SLOPE	I C 2, II C 2	WETLAND	155	155								0.03		
4	D	5A	749.45	749.45	PFO4B	SLOPE	I A 2	WETLAND	43	43								0.01		
4	D	5A	749.45	749.46	PFO4/1B	SLOPE	I C 2, II C 2	WETLAND	25	25								0.00		
4	D	5A	749.46	749.47	PFO4B	SLOPE	I A 2	WETLAND	39	39								0.01		
4	D	5A	749.47	749.61	U	N/A	I C 2, II C 2	UPLAND	757		757							0.14		
4	D	WB-S	749.61	749.62	U	N/A	I C 2, II C 2	UPLAND	60		60									0.01
4	D	5A	749.62	749.65	U	N/A	I C 2, II C 2	UPLAND	165		165							0.03		
4	D	5A	749.65	749.66	PFO4B	SLOPE	I A 2, II C 2	WETLAND	69	69								0.01		
4	D	5A	749.66	749.71	PFO4B	FLAT - ORGANIC	I A 2, II C 2	WETLAND	237	237								0.04		
4	D	5A	749.71	749.73	PFO4B	SLOPE	I A 2, II C 2	WETLAND	133	133								0.03		
4	D	5A	749.73	749.82	PFO4B	FLAT - ORGANIC	I A 2, II C 2	WETLAND	469	469								0.09		
4	D	5A	749.82	749.83	PFO4B	SLOPE	I A 2, II C 2	WETLAND	47	47								0.01		
4	D	5A	749.83	749.89	U	N/A	I C 2, II C 2	UPLAND	320		320							0.06		

SPREAD	SECTION	ROW MODE	FROM MP	TO MP	NWI CODE	HGM CLASS	VIERECK	DESCRIPTION	LINEAR FEET	WETLAND FEET	UPLAND FEET	DISTURBED FEET	Comments	Mode 1 - Ice Workpad (miles)	Mode 2 - Frost Pack (miles)	Mode 3 - Timber Mats	Mode 4 - Granular Workpad	Mode 5A - Grade	Mode 5B - Mountain Grade	Stream & Flood Plain Crossings
4	D	5A	749.89	749.92	PFO1/4B	FLAT - ORGANIC	I C 2, II B 2	WETLAND	129	129								0.02		
4	D	5A	749.92	750.02	U	N/A	I C 2, II C 2	UPLAND	543		543							0.10		
4	D	5A	750.02	750.03	PFO1/4B	FLAT - ORGANIC	I C 2, II B 2	WETLAND	30	30								0.01		
4	D	5A	750.03	750.05	U	N/A	I C 2, II C 2	UPLAND	153		153							0.03		
4	D	5A	750.05	750.06	PFO1/4C	RIVERINE	I C 3, II B 2	WETLAND	17	17								0.00		
4	D	WB-S	750.06	750.07	PFO1/4C	RIVERINE	I C 3, II B 2	WETLAND	39	39										0.01
4	D	WB-S	750.07	750.07	U	N/A	I C 2, II C 2	UPLAND	21		21									0.00
4	D	5A	750.07	750.24	U	N/A	I C 2, II C 2	UPLAND	901		901							0.17		
4	D	5A	750.24	750.25	PFO1/4B	SLOPE	I C 2, II C 2	WETLAND	26	26								0.01		
4	D	5A	750.25	750.27	U	N/A	I C 2, II C 2	UPLAND	151		151							0.03		
4	D	5A	750.27	750.32	PFO1/4B	SLOPE	I C 2, II C 2	WETLAND	257	257								0.05		
4	D	5A	750.32	750.34	U	N/A	I C 2, II C 2	UPLAND	75		75							0.01		
4	D	5A	750.34	750.41	PFO1/4B	SLOPE	I C 2, II C 2	WETLAND	389	389								0.07		
4	D	5A	750.41	750.42	U	N/A	I C 2, II C 2	UPLAND	36		36							0.01		
4	D	5A	750.42	750.44	PFO1/4B	SLOPE	I C 2, II B 2	WETLAND	121	121								0.02		
4	D	5A	750.44	750.46	U	N/A	I C 2, II B 2	UPLAND	112		112							0.02		
4	D	5A	750.46	750.47	PFO1/4B	SLOPE	I C 2, II B 2	WETLAND	34	34								0.01		
4	D	5A	750.47	750.50	U	N/A	I C 2, II B 2	UPLAND	157		157							0.03		
4	D	5A	750.50	750.66	PFO1/4B	SLOPE	I C 2, II B 2	WETLAND	844	844								0.16		
4	D	5A	750.66	750.66	U	N/A	I C 2, II C 2	UPLAND	17		17							0.00		
4	D	5A	750.66	750.68	PFO1/4B	SLOPE	I C 2, II B 2	WETLAND	122	122								0.02		
4	D	5A	750.68	750.83	U	N/A	I C 2, II C 2	UPLAND	777		777							0.15		
4	D	WB-S	750.83	750.84	U	N/A	I C 2, II C 2	UPLAND	60		60									0.01
4	D	5A	750.84	751.09	U	N/A	I C 2, II C 2	UPLAND	1307		1307							0.25		
4	D	5A	751.09	751.10	PFO4/1B	SLOPE	I C 2, II C 2	WETLAND	43	43								0.01		
4	D	5A	751.10	751.21	U	N/A	I C 2, II C 2	UPLAND	604		604							0.11		
4	D	5A	751.21	751.23	PFO4/1B	SLOPE	I C 2, II B 2	WETLAND	85	85								0.02		
4	D	5A	751.23	751.37	U	N/A	I C 2, II C 2	UPLAND	752		752							0.14		
4	D	WB-S	751.37	751.39	U	N/A	I C 2, II C 2	UPLAND	90		90									0.02
4	D	5A	751.39	751.49	U	N/A	I C 2, II C 2	UPLAND	529		529							0.10		
4	D	5A	751.49	751.51	PFO1/4B	SLOPE	I C 2, II C 2	WETLAND	94	94								0.02		
4	D	5A	751.51	751.56	U	N/A	I C 2, II C 2	UPLAND	311		311							0.06		
4	D	5A	751.56	751.60	PFO1/4B	SLOPE	I C 2, II C 2	WETLAND	179	179								0.03		
4	D	5A	751.60	751.67	U	N/A	I C 2, II C 2	UPLAND	387		387							0.07		
4	D	WB-S	751.67	751.69	U	N/A	I C 2, II C 2	UPLAND	90		90									0.02
4	D	5A	751.69	751.71	U	N/A	I C 2, II C 2	UPLAND	137		137							0.03		
4	D	5A	751.71	751.72	PFO1/4B	SLOPE	I C 2, II C 2	WETLAND	13	13								0.00		
4	D	5A	751.72	751.73	U	N/A	I C 2, II C 2	UPLAND	82		82							0.02		
4	D	5A	751.73	751.74	PFO1/4B	SLOPE	I C 2, II C 2	WETLAND	24	24								0.00		
4	D	5A	751.74	751.79	U	N/A	I C 2, II C 2	UPLAND	276		276							0.05		
4	D	5A	751.79	751.80	PFO1/4B	SLOPE	I C 2, II C 2	WETLAND	47	47								0.01		
4	D	5A	751.80	751.81	U	N/A	I C 2, II C 2	UPLAND	39		39							0.01		
4	D	5A	751.81	751.82	PFO1/4B	SLOPE	I C 2, II C 2	WETLAND	97	97								0.02		
4	D	5A	751.82	751.83	U	N/A	I C 2, II C 2	UPLAND	47		47							0.01		
4	D	5A	751.83	751.95	PFO1/4B	SLOPE	I C 2, II C 2	WETLAND	640	640								0.12		
4	D	5A	751.95	751.99	PFO1/4C	SLOPE	I C 2, II C 2	WETLAND	215	215								0.04		
4	D	5A	751.99	752.00	PFO4/SS4B	FLAT - ORGANIC	I A 2, II A 2	WETLAND	30	30								0.01		
4	D	5A	752.00	752.00	U	N/A	I C 2, II C 2	UPLAND	4		4							0.00		
4	D	5A	752.00	752.01	PFO4/SS4B	FLAT - ORGANIC	I A 2, II A 2	WETLAND	30	30								0.01		
4	D	5A	752.01	752.02	U	N/A	I C 2, II C 2	UPLAND	43		43							0.01		
4	D	5A	752.02	752.02	PFO4/SS4B	FLAT - ORGANIC	I A 2, II A 2	WETLAND	46	46								0.01		
4	D	5A	752.02	752.03	U	N/A	I C 2, II C 2	UPLAND	19		19							0.00		
4	D	5A	752.03	752.04	PFO4/1B	SLOPE	I C 2, II B 2	WETLAND	69	69								0.01		
4	D	5A	752.04	752.07	U	N/A	I C 2, II C 2	UPLAND	160		160							0.03		
4	D	5A	752.07	752.09	PFO4/1B	SLOPE	I C 2, II B 2	WETLAND	84	84								0.02		
4	D	5A	752.09	752.10	U	N/A	I C 2, II C 2	UPLAND	89		89							0.02		
4	D	5A	752.10	752.12	PFO4/1B	SLOPE	I C 2, II B 2	WETLAND	71	71								0.01		
4	D	5A	752.12	752.25	U	N/A	I C 2, II C 2	UPLAND	678		678							0.13		
4	D	WB-S	752.25	752.26	U	N/A	I C 2, II C 2	UPLAND	90		90									0.02
4	D	5A	752.26	752.59	U	N/A	I C 2, II C 2	UPLAND	1723		1723							0.33		
4	D	5A	752.59	752.61	PFO1/SS1C	RIVERINE	I B 3, II B 2	WETLAND	137	137								0.03		
4	D	WB-S	752.61	752.63	PFO1/SS1C	RIVERINE	I B 3, II B 2	WETLAND	55	55										0.01
4	D	WB-S	752.63	752.63	U	N/A	I C 2, II C 2	UPLAND	35		35									0.01
4	D	5A	752.63	753.63	U	N/A	I C 2, II C 2	UPLAND	5266		5266							1.00		
4	D	5A	753.63	753.64	PFO1/4B	SLOPE	I C 2, II C 2	WETLAND	56	56								0.01		
4	D	5A	753.64	753.99	U	N/A	I C 2, II C 2	UPLAND	1827		1827							0.35		
4	D	5A	753.99	754.07	U	N/A	I B 1	UPLAND	466		466							0.09		
4	D	5A	754.07	754.11	PSS1/4C	RIVERINE	II B 2, II A 2	WETLAND	184	184								0.03		
4	D	WB-S	754.11	754.11	PSS1/4C	RIVERINE	II B 2, II A 2	WETLAND	18	18										0.00
4	D	WB-S	754.11	754.13	R3UB/USH	RIVERINE	NONE	WETLAND	115	115										0.02
4	D	WB-S	754.13	754.14	U	N/A	I B 3, II B 2	UPLAND	18		18									0.00
4	D	5A	754.14	754.14	U	N/A	I B 3, II B 2	UPLAND	23		23							0.00		

SPREAD	SECTION	ROW MODE	FROM MP	TO MP	NWI CODE	HGM CLASS	VIERECK	DESCRIPTION	LINEAR FEET	WETLAND FEET	UPLAND FEET	DISTURBED FEET	Comments	Mode 1 - Ice Workpad (miles)	Mode 2 - Frost Pack (miles)	Mode 3 - Timber Mats	Mode 4 - Granular Workpad	Mode 5A - Grade	Mode 5B - Mountain Grade	Stream & Flood Plain Crossings
4	D	5A	754.14	754.93	U	N/A	I C 2, II C 2	UPLAND	4180		4180							0.79		
4	D	5A	754.93	754.94	PFO1/4B	SLOPE	I C 2, II C 2	WETLAND	47	47								0.01		
4	D	5A	754.94	754.94	U	N/A	I C 2, II C 2	UPLAND	13		13							0.00		
4	D	5A	754.94	754.95	PFO1/4B	SLOPE	I C 2, II C 2	WETLAND	46	46								0.01		
4	D	5A	754.95	754.99	U	N/A	I C 2, II C 2	UPLAND	188		188							0.04		
4	D	5A	754.99	755.03	PFO4B	FLAT - ORGANIC	I A 1	WETLAND	228	228								0.04		
4	D	5A	755.03	755.11	U	N/A	I C 2, II C 2	UPLAND	397		397							0.08		
4	D	5A	755.11	755.13	PFO1/4B	SLOPE	I C 2, II C 2	WETLAND	97	97								0.02		
4	D	5A	755.13	755.20	U	N/A	I C 2, II C 2	UPLAND	391		391							0.07		
4	D	5A	755.20	755.21	PFO1/4B	SLOPE	I C 2, II B 2	WETLAND	49	49								0.01		
4	D	5A	755.21	755.46	U	N/A	I C 2, II C 2	UPLAND	1337		1337							0.25		
4	D	5A	755.46	755.49	PFO1/4B	SLOPE	I C 2, II B 2	WETLAND	145	145								0.03		
4	D	5A	755.49	755.56	U	N/A	I C 2, II B 2	UPLAND	388		388							0.07		
4	D	5A	755.56	755.58	PFO1/4B	SLOPE	I C 2, II B 2	WETLAND	94	94								0.02		
4	D	5A	755.58	755.60	U	N/A	I C 2, II B 2	UPLAND	101		101							0.02		
4	D	5A	755.60	755.61	PFO1/4B	SLOPE	I C 2, II B 2	WETLAND	42	42								0.01		
4	D	5A	755.61	755.98	U	N/A	I C 2, II B 2	UPLAND	1957		1957							0.37		
4	D	5A	755.98	755.98	PFO1/4B	SLOPE	I C 2, II C 2	WETLAND	22	22								0.00		
4	D	5A	755.98	756.06	U	N/A	I C 2, II B 2	UPLAND	401		401							0.08		
4	D	5A	756.06	756.06	PFO1/4B	SLOPE	I C 2, II C 2	WETLAND	11	11								0.00		
4	D	5A	756.06	756.22	U	N/A	I C 2, II B 2	UPLAND	864		864							0.16		
4	D	5A	756.22	756.23	PFO4/1B	SLOPE	I C 2, II B 2	WETLAND	48	48								0.01		
4	D	5A	756.23	756.28	U	N/A	I C 2, II B 2	UPLAND	241		241							0.05		
4	D	5A	756.28	756.29	PFO4/1B	SLOPE	I C 2, II B 2	WETLAND	37	37								0.01		
4	D	5A	756.29	756.34	U	N/A	I C 2, II B 2	UPLAND	273		273							0.05		
4	D	5A	756.34	756.37	PFO4/1B	SLOPE	I C 2, II B 2	WETLAND	177	177								0.03		
4	D	5A	756.37	756.39	U	N/A	I C 2, II B 2	UPLAND	109		109							0.02		
4	D	5A	756.39	756.41	PFO4/1B	SLOPE	I C 2, II B 2	WETLAND	77	77								0.01		
4	D	5A	756.41	756.52	U	N/A	I C 2, II B 2	UPLAND	623		623							0.12		
4	D	5A	756.52	756.54	U	N/A	II C 2, II B 2	UPLAND	94		94							0.02		
4	D	5A	756.54	756.61	U	N/A	I C 2, II C 2	UPLAND	362		362							0.07		
4	D	5A	756.61	756.61	U	N/A	I C 2, II B 2	UPLAND	18		18							0.00		
4	D	WB-S	756.61	756.63	U	N/A	I C 2, II B 2	UPLAND	60		60									0.01
4	D	5A	756.63	756.66	U	N/A	I C 2, II B 2	UPLAND	202		202							0.04		
4	D	5A	756.66	756.71	PSS1E	DEPRESSIONAL	II C 2	WETLAND	256	256								0.05		
4	D	5A	756.71	756.74	PFO4/SS1B	DEPRESSIONAL	I C 2, II B 2	WETLAND	124	124								0.02		
4	D	5A	756.74	756.76	PSS1E	DEPRESSIONAL	II C 2	WETLAND	131	131								0.02		
4	D	5A	756.76	756.84	PFO4B	DEPRESSIONAL	I C 2, II C 2	WETLAND	416	416								0.08		
4	D	5A	756.84	756.85	PFO4/SS1B	DEPRESSIONAL	I C 2, II B 2	WETLAND	75	75								0.01		
4	D	5A	756.85	756.88	PSS1/FO4B	SLOPE	I C 3, II B 2	WETLAND	133	133								0.03		
4	D	5A	756.88	756.89	U	N/A	I C 2, II B 2	UPLAND	53		53							0.01		
4	D	5A	756.89	756.91	PFO4/1B	SLOPE	I C 2, II B 2	WETLAND	130	130								0.02		
4	D	5A	756.91	757.00	U	N/A	I C 2, II B 2	UPLAND	448		448							0.08		
4	D	5A	757.00	757.01	PFO4/1B	SLOPE	I C 2, II B 2	WETLAND	69	69								0.01		
4	D	5A	757.01	757.04	PSS4/1B	SLOPE	II A 2, II C 2	WETLAND	135	135								0.03		
4	D	5A	757.04	757.05	PSS1/EM1B	SLOPE	II C 2, III A 3	WETLAND	89	89								0.02		
4	D	5A	757.05	757.07	PFO4/1B	SLOPE	I C 2, II B 2	WETLAND	110	110								0.02		
4	D	5A	757.07	757.09	PSS1/EM1B	SLOPE	II C 2, III A 3	WETLAND	89	89								0.02		
4	D	5A	757.09	757.10	PFO4/1B	SLOPE	I C 2, II B 2	WETLAND	66	66								0.01		
4	D	5A	757.10	757.11	PSS4/1B	SLOPE	II A 2, II C 2	WETLAND	44	44								0.01		
4	D	5A	757.11	757.12	PFO4/1B	SLOPE	I C 2, II B 2	WETLAND	27	27								0.01		
4	D	5A	757.12	757.13	U	N/A	I C 2, II B 2	UPLAND	75		75							0.01		
4	D	WB-S	757.13	757.14	U	N/A	I C 2, II B 2	UPLAND	56		56									0.01
4	D	WB-S	757.14	757.23	R2UBH	RIVERINE	NONE	WETLAND	454	454										0.09
4	D	WB-S	757.23	757.24	PSS1A	RIVERINE	II B 2, II C 2	WETLAND	46	46										0.01
4	D	WB-S	757.24	757.24	U	N/A	I B 2, II B 2	UPLAND	12		12									0.002
4	D	5A	757.24	757.25	U	N/A	I B 2, II B 2	UPLAND	73		73							0.01		
4	D	5A	757.25	757.27	PSS1A	RIVERINE	II B 2, II C 2	WETLAND	74	74								0.01		
4	D	5A	757.27	757.27	U	N/A	I B 2, II B 2	UPLAND	0		0							0.00		
4	D	5A	757.27	757.27	PSS1A	RIVERINE	II B 2, II C 2	WETLAND	6	6								0.00		
4	D	5A	757.27	757.30	U	N/A	I B 2, II B 2	UPLAND	154		154							0.03		
4	D	5A	757.30	757.37	U	N/A	II B 2, III A 2	UPLAND	371		371							0.07		
4	D	5A	757.37	757.38	R2UBH	RIVERINE	NONE	WETLAND	40	40								0.01		
4	D	5A	757.38	757.46	U	N/A	I B 2, II B 2	UPLAND	467		467							0.09		
4	D	5A	757.46	757.48	U	N/A	I B 3, II B 2	UPLAND	83		83							0.02		
4	D	5A	757.48	757.57	U	N/A	I B 2, II B 2	UPLAND	462		462							0.09		
4	D	5A	757.57	757.75	U	N/A	I B 3, II B 2	UPLAND	956		956							0.18		
4	D	5A	757.75	757.75	PSS1/FO1C	SLOPE	I C 3, II B 2	WETLAND	13	13								0.00		
4	D	5A	757.75	757.76	U	N/A	II B 2	UPLAND	42		42							0.01		
4	D	5A	757.76	757.78	PSS1/FO1C	SLOPE	I C 3, II B 2	WETLAND	131	131								0.02		
4	D	5A	757.78	758.70	U	N/A	I C 3, II B 2	UPLAND	4834		4834							0.92		
4	D	5A	758.70	758.70	D	N/A	NONE	DISTURBED	30			30						0.01		

SPREAD	SECTION	ROW MODE	FROM MP	TO MP	NWI CODE	HGM CLASS	VIERECK	DESCRIPTION	LINEAR FEET	WETLAND FEET	UPLAND FEET	DISTURBED FEET	Comments	Mode 1 - Ice Workpad (miles)	Mode 2 - Frost Pack (miles)	Mode 3 - Timber Mats	Mode 4 - Granular Workpad	Mode 5A - Grade	Mode 5B - Mountain Grade	Stream & Flood Plain Crossings
4	D	5A	758.70	760.31	U	N/A	I C 2, II B 2	UPLAND	8460		8460							1.60		
4	D	5A	760.31	760.31	D	N/A	NONE	DISTURBED	25			25						0.00		
4	D	5A	760.31	761.44	U	N/A	I C 2, II B 2	UPLAND	5947		5947							1.13		
4	D	5A	761.44	761.75	U	N/A	I B 3, II B 2	UPLAND	1661		1661							0.31		
4	D	5A	761.75	762.38	U	N/A	I C 2, II B 2	UPLAND	3305		3305							0.63		
4	D	5A	762.38	762.39	PFO4/SS1B	SLOPE	I C 2, II B 2	WETLAND	75	75								0.01		
4	D	5A	762.39	762.63	U	N/A	I C 2, II B 2	UPLAND	1258		1258							0.24		
4	D	5A	762.63	762.65	PSS1/EM1E	SLOPE	II C 2, III A 3	WETLAND	121	121								0.02		
4	D	5A	762.65	763.06	U	N/A	I C 2, II B 2	UPLAND	2172		2172							0.41		
4	D	5A	763.06	763.07	PSS1/EM1E	SLOPE	II C 2, III A 2	WETLAND	17	17								0.00		
4	D	WB-S	763.07	763.08	PSS1/EM1E	SLOPE	II C 2, III A 2	WETLAND	60	60										0.01
4	D	5A	763.08	763.09	PSS1/EM1E	SLOPE	II C 2, III A 2	WETLAND	39	39								0.01		
4	D	5A	763.09	763.14	PFO4B	FLAT - ORGANIC	I A 2	WETLAND	279	279								0.05		
4	D	5A	763.14	763.21	PFO1/4B	FLAT - ORGANIC	I C 2, II C 2	WETLAND	386	386								0.07		
4	D	5A	763.21	763.35	U	N/A	I C 2, II B 2	UPLAND	734		734							0.14		
4	D	5A	763.35	763.39	PFO4/1B	SLOPE	I C 2, II C 2	WETLAND	202	202								0.04		
4	D	5A	763.39	763.94	U	N/A	I C 2, II B 2	UPLAND	2883		2883							0.55		
4	D	5A	763.94	763.94	PSS1/EM1C	RIVERINE	II B 2, III A 2	WETLAND	7	7								0.00		
4	D	WB-S	763.94	763.95	PSS1/EM1C	RIVERINE	II B 2, III A 2	WETLAND	56	56										0.01
4	D	WB-S	763.95	763.96	U	N/A	I C 2, II B 2	UPLAND	47		47									0.01
4	D	WB-S	763.96	763.96	PSS1/EM1C	RIVERINE	II B 2, III A 2	WETLAND	21	21										0.004
4	D	WB-S	763.96	763.97	U	N/A	I C 2, II B 2	UPLAND	26		26									0.01
4	D	5A	763.97	764.04	U	N/A	I C 2, II B 2	UPLAND	406		406							0.08		
4	D	5A	764.04	764.05	PFO4/1B	SLOPE	I C 2, II B 2	WETLAND	58	58								0.01		
4	D	5A	764.05	764.08	PSS1/EM1B	DEPRESSIONAL	II C 2, III A 2	WETLAND	131	131								0.02		
4	D	5A	764.08	764.08	PSS4/1B	DEPRESSIONAL	II A 2, II C 2	WETLAND	32	32								0.01		
4	D	5A	764.08	764.11	U	N/A	I C 2, II B 2	UPLAND	114		114							0.02		
4	D	5A	764.11	764.12	PFO4/1B	SLOPE	I C 2, II B 2	WETLAND	85	85								0.02		
4	D	5A	764.12	764.22	U	N/A	I C 2, II B 2	UPLAND	526		526							0.10		
4	D	5A	764.22	764.23	U	N/A	III B 2	UPLAND	57		57							0.01		
4	D	5A	764.23	764.43	U	N/A	I C 2, II B 2	UPLAND	1035		1035							0.20		
4	D	5A	764.43	764.46	PFO4/1B	SLOPE	I C 2, II B 2	WETLAND	169	169								0.03		
4	D	5A	764.46	764.49	U	N/A	I C 2, II B 2	UPLAND	146		146							0.03		
4	D	5A	764.49	764.52	PFO4/1B	SLOPE	I C 2, II B 2	WETLAND	144	144								0.03		
4	D	5A	764.52	764.52	U	N/A	I C 2, II B 2	UPLAND	29		29							0.01		
4	D	5A	764.52	764.53	PFO4/1B	SLOPE	I C 2, II B 2	WETLAND	52	52								0.01		
4	D	5A	764.53	764.56	U	N/A	I C 2, II B 2	UPLAND	155		155							0.03		
4	D	5A	764.56	764.63	PFO4/1B	SLOPE	I C 2, II B 2	WETLAND	355	355								0.07		
4	D	5A	764.63	764.72	U	N/A	I C 2, II B 2	UPLAND	466		466							0.09		
4	D	5A	764.72	764.77	PFO4/1B	SLOPE	I C 2, II B 2	WETLAND	260	260								0.05		
4	D	5A	764.77	764.79	U	N/A	I C 2, II B 2	UPLAND	135		135							0.03		
4	D	5A	764.79	764.81	PFO4/1B	SLOPE	I C 2, II B 2	WETLAND	84	84								0.02		
4	D	5A	764.81	764.82	U	N/A	I C 2, II B 2	UPLAND	59		59							0.01		
4	D	5A	764.82	764.88	PFO4/1B	SLOPE	I C 2, II B 2	WETLAND	317	317								0.06		
4	D	5A	764.88	765.01	U	N/A	I C 2, II B 2	UPLAND	696		696							0.13		
4	D	5A	765.01	765.02	D	N/A	NONE	DISTURBED	56			56						0.01		
4	D	5A	765.02	765.33	U	N/A	I C 2, II B 2	UPLAND	1648		1648							0.31		
4	D	5A	765.33	765.70	U	N/A	I B 2, III A 2	UPLAND	1947		1947							0.37		
4	D	5A	765.70	765.87	U	N/A	I C 2, II B 2	UPLAND	875		875							0.17		
4	D	5A	765.87	765.87	D	N/A	NONE	DISTURBED	41			41						0.01		
4	D	5A	765.87	766.04	U	N/A	I C 2, II B 2	UPLAND	890		890							0.17		
4	E	5A	793.29	793.49	U	N/A	I C 2, II B 2	UPLAND	1050		1050							0.20		
4	E	WB-S	793.49	793.52	U	N/A	I C 2, II B 2	UPLAND	180		180									0.03
4	E	5A	793.52	793.82	U	N/A	I C 2, II B 2	UPLAND	1576		1576							0.30		
4	E	5A	793.82	793.83	D	N/A	NONE	DISTURBED	43			43						0.01		
4	E	5A	793.83	794.83	U	N/A	I C 2, II B 2	UPLAND	5292		5292							1.00		
4	E	5A	794.83	794.85	PEM1/SS1C	SLOPE	III A 2, II C 2	WETLAND	101	101								0.02		
4	E	5A	794.85	794.85	PUBH	DEPRESSIONAL	NONE	WETLAND	1	1								0.00		
4	E	5A	794.85	794.85	PEM1/SS1C	SLOPE	III A 2, II C 2	WETLAND	18	18								0.00		
4	E	5A	794.85	795.47	U	N/A	I C 2, II B 2	UPLAND	3253		3253							0.62		
4	E	5A	795.47	795.54	U	N/A	III B 1	UPLAND	356		356							0.07		
4	E	5A	795.54	795.66	U	N/A	I C 2, II B 2	UPLAND	656		656							0.12		
4	E	5A	795.66	795.73	U	N/A	III B 1	UPLAND	352		352							0.07		
4	E	5A	795.73	795.84	U	N/A	I C 2, II B 2	UPLAND	562		562							0.11		
4	E	5A	795.84	795.86	U	N/A	III B 1	UPLAND	139		139							0.03		
4	E	5A	795.86	796.22	U	N/A	I C 2, II B 2	UPLAND	1889		1889							0.36		
4	E	5A	796.22	796.22	PSS1B	DEPRESSIONAL	II B 2	WETLAND	22	22								0.00		
4	E	5A	796.22	796.30	U	N/A	I C 2, II B 2	UPLAND	382		382							0.07		
4	E	5A	796.30	796.36	PSS1B	DEPRESSIONAL	II C 2, I A 3	WETLAND	342	342								0.06		
4	E	5A	796.36	797.30	U	N/A	I C 2, II B 2	UPLAND	4979		4979							0.94		
4	E	5A	797.30	797.31	D	N/A	NONE	DISTURBED	14			14						0.00		
4	E	5A	797.31	797.78	U	N/A	I C 2, II B 2	UPLAND	2523		2523							0.48		

SPREAD	SECTION	ROW MODE	FROM MP	TO MP	NWI CODE	HGM CLASS	VIERECK	DESCRIPTION	LINEAR FEET	WETLAND FEET	UPLAND FEET	DISTURBED FEET	Comments	Mode 1 - Ice Workpad (miles)	Mode 2 - Frost Pack (miles)	Mode 3 - Timber Mats	Mode 4 - Granular Workpad	Mode 5A - Grade	Mode 5B - Mountain Grade	Stream & Flood Plain Crossings
4	E	WB-S	797.78	797.80	U	N/A	I C 2, II B 2	UPLAND	60		60									0.01
4	E	5A	797.80	797.90	U	N/A	I C 2, II B 2	UPLAND	570		570							0.11		
4	E	WB-S	797.90	797.91	U	N/A	I C 2, II B 2	UPLAND	60		60									0.01
4	E	5A	797.91	797.92	U	N/A	I C 2, II B 2	UPLAND	34		34							0.01		
4	E	5A	797.92	798.20	U	N/A	I B 3, II B 1	UPLAND	1481		1481							0.28		
4	E	5A	798.20	798.21	PEM1B	DEPRESSIONAL	III A 3	WETLAND	30	30								0.01		
4	E	5A	798.21	798.40	U	N/A	I C 2, II B 2	UPLAND	1018		1018							0.19		
4	E	5A	798.40	798.47	U	N/A	II B 1	UPLAND	365		365							0.07		
4	E	5A	798.47	798.53	U	N/A	I B 3, II B 1	UPLAND	332		332							0.06		
4	E	5A	798.53	798.55	U	N/A	I C 2, II B 2	UPLAND	101		101							0.02		
4	E	5A	798.55	798.57	D	N/A	NONE	DISTURBED	120			120						0.02		
4	E	5A	798.57	799.40	U	N/A	I B 2, II B 1	UPLAND	4351		4351							0.82		
4	E	5B	799.40	799.41	U	N/A	I B 2, II B 1	UPLAND	40		40								0.01	
4	E	5B	799.41	799.47	D	N/A	NONE	DISTURBED	324			324							0.06	
4	E	5B	799.47	799.87	U	N/A	I B 2, II B 1	UPLAND	2148		2148								0.41	
4	E	5B	799.87	799.89	D	N/A	NONE	DISTURBED	91			91							0.02	
4	E	5B	799.89	800.26	U	N/A	I C 2, II B 2	UPLAND	1931		1931								0.37	
4	E	5A	800.26	800.26	U	N/A	I C 2, II B 2	UPLAND	39		39							0.01		
4	E	5A	800.26	800.28	D	N/A	NONE	DISTURBED	61			61						0.01		
4	E	5A	800.28	800.34	U	N/A	I B 2, II B 2	UPLAND	333		333							0.06		
4	E	5A	800.34	800.36	PEM1/SS1B	DEPRESSIONAL	III A 2, II C 2	WETLAND	90	90								0.02		
4	E	5A	800.36	800.60	U	N/A	I B 2, II B 2	UPLAND	1302		1302							0.25		
4	E	WB-S	800.60	800.61	U	N/A	I B 2, II B 2	UPLAND	60		60									0.01
4	E	5A	800.61	801.86	U	N/A	I B 2, II B 2	UPLAND	6577		6577							1.25		
4	E	5A	801.86	801.94	U	N/A	I C 2, II B 2	UPLAND	431		431							0.08		
4	E	5A	801.94	802.02	U	N/A	I B 2, II B 2	UPLAND	433		433							0.08		
4	E	5A	802.02	803.23	U	N/A	I C 2, II B 2	UPLAND	6356		6356							1.20		
4	E	5A	803.23	803.90	U	N/A	I C 1	UPLAND	3559		3559							0.67		
4	E	5A	803.90	803.91	D	N/A	NONE	DISTURBED	73			73						0.01		
4	E	5A	803.91	804.23	U	N/A	I C 2, II B 2	UPLAND	1652		1652							0.31		
4	E	5A	804.23	804.31	D	N/A	NONE	DISTURBED	418			418						0.08		
4	E	5A	804.31	804.36	U	N/A	I C 2, II C 2	UPLAND	294		294							0.06		
4	E	5A	804.36	804.46	U	N/A	I B 1, II B 1	UPLAND	493		493							0.09		
4	E	5A	804.46	804.51	D	N/A	NONE	DISTURBED	310			310						0.06		
4	E	5A	804.51	804.52	U	N/A	II C 2, III B 2	UPLAND	34		34							0.01		
4	E	5A	804.52	804.55	U	N/A	I B 1	UPLAND	131		131							0.02		
4	E	WB-S	804.55	804.55	U	N/A	I B 1	UPLAND	7		7									0.001
4	E	WB-S	804.55	804.55	PEM1E	DEPRESSIONAL	III A 3	WETLAND	12	12										0.00
4	E	WB-S	804.55	804.56	U	N/A	I C 2, II C 2	UPLAND	41		41									0.01
4	E	5A	804.56	804.57	U	N/A	I C 2, II C 2	UPLAND	50		50							0.01		
4	E	5A	804.57	804.57	D	N/A	NONE	DISTURBED	11			11						0.00		
4	E	5A	804.57	805.53	U	N/A	I C 2, II C 2	UPLAND	5075		5075							0.96		
4	E	5A	805.53	805.55	D	N/A	NONE	DISTURBED	83			83						0.02		
4	E	5A	805.55	806.50	U	N/A	I C 2, III A 2	UPLAND	5025		5025							0.95		
4	E	5A	806.50	806.51	D	N/A	NONE	DISTURBED	71			71						0.01		
4	E	5A	806.51	806.56	U	N/A	I C 2, II C 2	UPLAND	255		255							0.05		
4	E	5A	806.56	806.57	D	N/A	NONE	DISTURBED	51			51						0.01		
4	E	5A	806.57	806.57	U	N/A	I C 2, II C 2	UPLAND	27		27							0.01		

TOTAL LF	4,114,847	2,013,462	2,081,758	19,626
TOTAL MILES	779.33	381.34	394.27	3.72
	ALL	WETLANDS	UPLANDS	DISTURBED

Mode 1 - Ice Workpad (miles)	Mode 2 - Frost Pack (miles)	Mode 3 - Timber Mats	Mode 4 - Granular Workpad	Mode 5A - Grade	Mode 5B - Mountain Grade	Stream & Flood Plain Crossings		
298,673	366,449	2,879	1,538,840	1,833,449	12,003	62,494	4,114,787	TOTAL LF
56.57	69.40	0.55	291.45	347.24	2.27	11.84	**779.32**	Onshore
							27.25	Offshore
Mode 1 - Ice Workpad (miles)	Mode 2 - Frost Pack (miles)	Mode 3 - Timber Mats	Mode 4 - Granular Workpad	Mode 5A - Grade	Mode 5B - Mountain Grade	Stream & Flood Plain Crossings	**806.56**	Total

Attachment F: Travel and Bypass Lane Location and Justification

Spread	Section	From MP	To MP	Total Limited Access (miles)	Travel Lane (miles)	Bypass Lane (miles)	Access Road on Travel Lane (miles)
1	A	0.00	56.63	56.63	56.63	56.63	
1	B	56.63	63.33	6.70	6.70		
1	B	94.31	109.65	15.34	15.34		
1	C	129.58	136.52	6.94	6.94		
2	A	223.47	224.27	0.80	0.80		
2	A	227.71	228.09	0.38	0.38		
2	L	389.00	393.95	4.95	4.95		
3	A	401.20	408.10	6.90	6.90	6.90	6.90
3	B	408.10	421.51	13.41			13.41
3	C	430.48	464.36	33.88	33.88	33.88	
3	C	464.36	470.70	6.34		6.34	
3	E	473.78	489.38	15.60	15.60	15.60	
3	F	489.38	498.58	9.20	9.20		
3	K	538.87	543.08	4.21	4.21		
4	A	642.28	648.28	6.00	6.00		
4	B	674.05	693.94	19.89	No		19.89
4	B	693.94	703.80	9.86	No		9.86
4	C	703.80	721.23	17.43	17.43		
4	C	721.23	745.00	23.77	23.77		
TOTALS				258.23	208.73	119.35	50.06

Spread	Section	From MP	To MP	ROW Distance	Travel Lane	Bypass Lane	Access Road on Travel Lane	Optimized Season of Pipe Lay	Comments
1	A	0.00	56.63	56.63	Yes	Yes		W1	Ice Pad ROW with traditional full width including travel lanes and bypass lane for the entire distance. No impact to natural vegetation - protected by temporary ice pad. Bypass lane needed for access to trenching crews because pipe is laid before ditching.
1	B	56.63	63.33	6.70	Yes	No		S1.5	ROW is away from Dalton for entire 7-mile distance.
1	B	94.31	109.65	15.34	Yes	No		S1.5	ROW is trapped behind TAPS Above Ground pipeline for over 15 miles with no access. The travel lane needs to continue all the way south to where Access Road AR-N-109.9 comes in to the ROW.
1	C	129.58	136.52	6.94	Yes	No		W2	Remote area with no access; trapped by TAPS Above Ground pipeline; Kuparuk River crossing in middle and hilly terrain.

Spread	Section	From MP	To MP	ROW Distance	Travel Lane	Bypass Lane	Access Road on Travel Lane	Optimized Season of Pipe Lay	Comments
2	A	223.47	224.27	0.80	Yes	No		W1	Travel lane provides access to north end of isolated portion of very steep sidehill where ROW may be narrowed in places and not passable to normal construction traffic.
2	A	227.71	228.09	0.38	Yes	No		W1	Travel lane provides access to south end isolated portion of very steep sidehill where ROW may be narrowed in places and not passable to normal construction traffic.
2	L	389.00	393.95	4.95	Yes	No		S2.5	Extremely isolated - some steep hills - travel lane is needed to access south end of isolated area at Erickson Creek. Travel lane begins at MP 393.95 and goes north to MP 389.0 at the top of steep hill on south side of Erickson Creek #2 MP 387.9 crossing. The bottom land at Erickson Creek is isolated by steep hills to the north and south - especially the shoo fly at MP 385 down to Erickson Creek #1 MP 385.7.

Spread	Section	From MP	To MP	ROW Distance	Travel Lane	Bypass Lane	Access Road on Travel Lane	Optimized Season of Pipe Lay	Comments

3	A	401.20	408.10	6.90	Yes	Yes	Yes	W1	Winter construction -bypass is needed because likely ditched after pipe lay; travel lanes needed for access to Ridge Section 3B from Livengood Camp and due to 40 mile winter work to the Chatanika River. Should start at the access road coming from the PSY & Camp; not from the road crossing. This is where the shoo fly starts and where the travel lane should end.
3	B	408.10	421.51	13.41	No	No	Yes	W1	A permananet access road will be parallel to ROW to Minto Flats Compressor Station. No need for travel lane.
3	C	430.48	464.36	33.88	Yes	Yes		W1	Winter construction -bypass is needed because likely ditched after pipe lay; travel lanes needed for access to Chatanika River crossing.
3	C	464.36	470.70	6.34	No	Yes		W1	Access is OK along the ROW and from each end and Tanana River. Bypass lane needed because spoil side is east of ROW blocking access roads at MP 464.37, MP 466.91, and MP 470.73.
3	E	473.78	489.38	15.60	Yes	Yes		W2	Travel lane needed because ROW is the only access to Nenana #2 river crossing; Section includes a 13-mile long section with no other access than the ROW with a river crossing at each end; Bypass needed because may be ditched after pipe lay in winter.
3	F	489.38	498.58	9.20	Yes	No		W2	ROW is only access (one way & dead end) from Rex to Nenana #2 river crossing;
3	K	538.87	543.08	4.21	Yes	No		S1.5	Travel Lane needed to access staging area at Montana Creek and MLBV 35.

Spread	Section	From MP	To MP	ROW Distance	Travel Lane	Bypass Lane	Access Road on Travel Lane	Optimized Season of Pipe Lay	Comments
4	A	642.28	648.28	6.00	Yes	No		S1.5	One way access to west side of Chulitna River crossing.
4	B	674.05	693.94	19.89	No	No	Yes	W1	Two Lane Road from Parks Highway to Susitna Camp.
4	B	693.94	703.80	9.86	No	No	Yes	W2	Two Lane Road from Parks Highway to Susitna Camp and Deshka CS beyond at MP 703.8; whenever possible adjacent to ROW or parallels ROW. Ends at the Deshka CS MLBV 46.
4	C	703.80	721.23	17.43	Yes	No		W2	ROW is only way from Susitna Camp to Yentna River (MP 721.23) and Yentna to Sleeping Lady Camp (MP 745.00).
4	C	721.23	745.00	23.77	Yes	No		S2.5	One Way from Yentna River to Sleeping Lady Camp at MP 745.0. There is no other access to move equipment or access the south side of Yentna from Sleeping Lady camp. Don't need travel lane south of Sleeping Lady Camp.

Attachment G: Access Roads to ROW Location by Milepost

Spread	Section	ROW Access Name	Milepost	Miles to Next AR	Road Type	Material	Status	On Centerline	Road Length (feet)	No. AR per Section	Average AR Spacing
1	A	1A Start	0.00	4.60	Temporary	Gravel	New	YES	2,255		
1	A	AR-WS-E-4.61	4.60	13.52	Temporary	Gravel	Existing	YES	5,662		
1	A	AR-MLBV-N-18.13	18.12	10.09	Temporary	Gravel	New	YES	18,614		
1	A	AR-N-28.22	28.21	1.16	Temporary	Gravel	New	YES	189		
1	A	AR-WS-N-29.37	29.37	2.25	Temporary	Gravel	New	YES	136		
1	A	AR-N-31.63	31.62	0.00	Temporary	Gravel	New	YES	118		
1	A	WS-E-31.63	31.62	1.98	Temporary	Gravel	Existing	NO	4,121		
1	A	ALT-MS-33.6	33.60	0.62	Temporary	Gravel	New	YES	1,887		
1	A	AR-N-34.23	34.22	0.01	Temporary	Gravel	New	YES	143		
1	A	MS-E-34.23	34.23	0.00	Temporary	Gravel	Existing	NO	1,094		
1	A	ALT-MS-34.23	34.23	1.42	Temporary	Gravel	New	NO	498		
1	A	MS-WS-E-35.66	35.65	0.00	Temporary	Gravel	Existing	NO	1,342		
1	A	AR-HT-N-35.66	35.65	1.09	Temporary	Gravel	New	YES	379		
1	A	AR-MLBV-N-36.75	36.74	6.90	Temporary	Gravel	New	YES	138		
1	A	AR-N-43.65	43.64	4.19	Temporary	Gravel	New	YES	168		
1	A	AR-N-47.84	47.83	8.80	Temporary	Gravel	New	YES	208		
1	**A**	**AR-MLBV-HT-N-56.64**	**56.63**	**2.33**	**Temporary**	**Gravel**	**New**	**YES**	**1,577**	**17**	**3.3**
1	B	AR-N-58.96	58.96	4.29	Temporary	Gravel	New	YES	2,684		
1	B	AR-XG-N-63.25	63.25	0.58	Temporary	Gravel	New	YES	126		
1	B	End of Travel Lane	#REF!	#REF!							
1	B	AR-HT-N-63.84	63.83	4.25	Temporary	Gravel	New	YES	555		
1	B	AR-XG-N-68.07	68.08	0.03	Temporary	Gravel	New	NO	280		
1	B	AR-XG-N-68.12	68.11	3.30	Temporary	Gravel	New	YES	114		
1	B	AR-N-71.42	71.41	1.22	Temporary	Gravel	New	YES	1,033		
1	B	AR-HT-N-72.63	72.63	1.99	Temporary	Gravel	New	YES	132		
1	B	AR-N-74.62	74.62	1.20	Temporary	Gravel	New	YES	458		
1	B	AR-MLBV-CS-N-75.82	75.82	0.29	Permanent	Gravel	New	YES	270		
1	B	AR-MLBV-CS-N-76.12	76.11	1.99	Permanent	Gravel	New	YES	277		
1	B	AR-N-78.11	78.10	2.61	Temporary	Gravel	New	YES	441		
1	B	AR-N-80.71	80.71	2.30	Temporary	Gravel	New	YES	472		
1	B	AR-HT-N-83.02	83.01	2.19	Temporary	Gravel	New	YES	669		
1	B	AR-N-85.21	85.20	0.50	Temporary	Gravel	New	YES	2,066		

Spread	Section	ROW Access Name	Milepost	Miles to Next AR	Road Type	Material	Status	On Centerline	Road Length (feet)	No. AR per Section	Average AR Spacing
1	B	AR-GA-N-85.7	85.70	3.10	Temporary	Gravel	New	YES	2,437		
1	B	AR-N-88.8	88.80	1.96	Temporary	Gravel	New	YES	523		
1	B	AR-N-90.77	90.76	3.55	Temporary	Gravel	New	YES	747		
1	B	AR-MLBV-HT-N-94.32	94.31	15.33	Temporary	Gravel	New	YES	838		
1	B	AR-N-109.65	109.64	2.31	Temporary	Gravel	New	YES	3,169		
1	B	AR-MLBV-N-111.96	111.95	2.77	<Null>	<Null>	<Null>	YES	2,461		
1	**B**	**AR-HT-N-114.73**	**114.72**	**2.96**	**Temporary**	**Gravel**	**New**	**YES**	**336**	**21**	**2.8**
1	C	AR-HT-N-117.69	117.68	1.58	Temporary	Gravel	New	YES	533		
1	C	AR-MS-E-119.27	119.26	1.88	Temporary	Gravel	Existing	YES	865		
1	C	AR-HT-N-121.15	121.14	1.71	Temporary	Gravel	New	YES	379		
1	C	AR-XG-N-122.86	122.85	0.18	Temporary	Gravel	New	YES	337		
1	C	AR-XG-MS-I-123.04	123.03	1.52	Temporary	Gravel	Improve	YES	2,955		
1	C	AR-XG-HT-N-124.56	124.55	3.28	Temporary	Gravel	New	YES	166		
1	C	AR-N-127.83	127.83	1.72	Temporary	Gravel	New	YES	287		
1	C	AR-MS-MLBV-PSY-E-129	129.55	6.76	Temporary	Gravel	Existing	YES	10,742		
1	C	AR-XG-HT-N-136.32	136.31	0.04	Temporary	Gravel	New	YES	274		
1	C	AR-XG-HT-I-136.35	136.35	0.12	Temporary	Gravel	Improve	YES	1,429		
1	C	AR-XG-N-136.48	136.47	0.07	Temporary	Gravel	New	YES	262		
1	C	AR-XG-N-136.55	136.54	2.11	Temporary	Gravel	New	YES	325		
1	C	AR-N-138.66	138.65	2.59	Temporary	Gravel	New	YES	461		
1	C	AR-MS-HT-CAMP-PSY-E	141.24	1.59	Temporary	Gravel	Existing	YES	17,922		
1	C	AR-N-142.84	142.83	0.98	Temporary	Gravel	New	YES	198		
1	C	AR-XG-HT-N-143.82	143.81	0.07	Temporary	Gravel	New	YES	347		
1	C	AR-XG-N-143.89	143.88	1.09	Temporary	Gravel	New	YES	134		
1	C	AR-GA-E-144.98	144.97	0.38	Temporary	Gravel	Existing	YES	203		
1	C	AR-GA-HT-N-145.36	145.35	1.67	Temporary	Gravel	New	YES	446		
1	C	AR-N-147.03	147.02	1.49	Permanent	Gravel	New	YES	814		
1	C	AR-MLBV-CS-N-148.51	148.51	0.24	Temporary	Gravel	New	YES	233		
1	C	MS-E-148.76	148.75	0.05	Temporary	Gravel	Existing	YES	615		
1	C	AR-GA-N-148.81	148.80	0.22	Temporary	Gravel	New	YES	187		
1	C	WD-E-149	149.02	2.01	Temporary	Gravel	Existing	YES	589		
1	C	AR-GA-HT-N-151.04	151.03	0.17	Temporary	Gravel	New	YES	226		

Spread	Section	ROW Access Name	Milepost	Miles to Next AR	Road Type	Material	Status	On Centerline	Road Length (feet)	No. AR per Section	Average AR Spacing
1	C	AR-GA-N-151.21	151.20	1.75	Temporary	Gravel	New	YES	234		
1	C	AR-I-152.96	152.95	3.22	Temporary	Gravel	Improve	YES	191		
1	C	AR-MS-E-156.18	156.17	0.86	Temporary	Gravel	Existing	YES	183		
1	C	AR-GA-N-157.04	157.03	1.71	Temporary	Gravel	New	YES	161		
1	C	AR-GA-HT-N-158.75	158.74	1.56	Temporary	Gravel	New	YES	164		
1	C	AR-N-160.31	160.30	2.57	Temporary	Gravel	New	YES	170		
1	C	AR-MS-MLBV-E-162.88	162.87	3.19	Temporary	Gravel	Existing	YES	2,346		
1	C	AR-PSY-N-166.07	166.06	0.50	Temporary	Gravel	New	YES	1,141	**33**	**1.6**
1	D	AR-N-166.57	166.56	1.99	Temporary	Gravel	New	YES	261		
1	D	AR-XG-N-168.56	168.55	0.15	Temporary	Gravel	New	YES	514	**2**	**0.9**
1	D	AR-XG-HT-N-168.71	168.70	0.69	Temporary	Gravel	New	YES	383		
1	E	AR-E-169.4	169.39	0.52	Temporary	Gravel	Existing	YES	384		
1	E	AR-N-169.92	169.91	1.84	Temporary	Gravel	New	YES	83	**3**	**0.4**
1	F	AR-XG-HT-N-171.75	171.75	0.15	Temporary	Gravel	Existing	YES	583		
1	F	AR-XG-HT-E-171.91	171.90	0.05	Temporary	Gravel	Existing	YES	353		
1	F	AR-GA-N-171.96	171.95	2.72	Temporary	Gravel	New	YES	101		
1	F	MS-E-174.74	174.67	0.01	Temporary	Gravel	Existing	NO	768		
1	F	MS-N-174.74	174.68	0.03	Temporary	Gravel	New	NO	1,520		
1	F	PSY-E-174.74	174.71	0.02	Temporary	Gravel	Existing	NO	377		
1	F	AR-PSY-N-174.74	174.73	0.49	Temporary	Gravel	New	YES	225		
1	F	AR-I-175.23	175.22	1.66	Temporary	Gravel	New	YES	236		
1	F	AR-GA-MLBV-E-176.89	176.88	1.89	Temporary	Gravel	Existing	YES	322	**9**	**0.7**
1	G	AR-GA-N-178.78	178.77	0.89	Temporary	Gravel	New	YES	155		
1	G	AR-GA-N-179.67	179.66	0.65	Temporary	Gravel	New	YES	223		
1	G	AR-MS-N-180.32	180.31	1.26	Temporary	Gravel	New	YES	686		
1	G	AR-GA-N-181.58	181.57	0.37	Temporary	Gravel	New	YES	936		
1	**G**	**AR-XG-GA-N-181.94**	**181.94**	**0.06**	**Temporary**	**Gravel**	**New**	**YES**	**1,867**		
1	G	AR-XG-GA-N-182.0	182.00	0.08	Temporary	Gravel	New	YES	182		
1	G	AR-XG-N-182.09	182.08	1.46	Temporary	Gravel	New	YES	178	**7**	**0.6**
1	H	AR-XG-N-183.55	183.54	0.94	Temporary	Gravel	New	YES	341		
1	H	AR-GA-N-184.49	184.48	0.09	Temporary	Gravel	New	YES	355		
1	H	AR-GA-N-184.58	184.57	1.24	Temporary	Gravel	New	YES	351		

Spread	Section	ROW Access Name	Milepost	Miles to Next AR	Road Type	Material	Status	On Centerline	Road Length (feet)	No. AR per Section	Average AR Spacing
1	H	AR-N-185.82	185.81	1.70	Temporary	Gravel	New	YES	358		
1	H	AR-GA-N-187.52	187.51	0.20	Temporary	Gravel	New	YES	111		
1	H	AR-GA-N-187.72	187.71	0.22	Temporary	Gravel	New	YES	130		
1	H	AR-N-187.94	187.93	0.56	Temporary	Gravel	New	YES	134		
1	H	AR-N-188.5	188.49	2.54	Temporary	Gravel	New	YES	164		
1	H	MS-PSY-N-191.04	191.03	0.00	Temporary	Gravel	New	NO	190		
1	H	AR-MS-E-191.04	191.03	2.28	Temporary	Gravel	Existing	YES	271		
1	H	AR-XG-N-193.35	193.31	0.03	Temporary	Gravel	New	NO	125		
1	H	AR-XG-N-193.35	193.34	0.00	Temporary	Gravel	New	YES	125		
1	H	AR-XG-N-193.35	193.34	0.75	Temporary	Gravel	New	YES	125		
1	H	AR-MS-MLBV-N-194.1	194.09	0.00	Temporary	Gravel	New	YES	1,288		
1	H	MS-N-194.1	194.09	1.16	Temporary	Gravel	New	YES	614		
1	H	AR-I-195.26	195.25	1.20	Temporary	Gravel	Improve	YES	438		
1	H	AR-XG-N-196.46	196.45	0.20	Temporary	Gravel	New	YES	1,045		
1	H	AR-XG-N-196.66	196.65	1.08	Temporary	Gravel	New	YES	192		
1	H	AR-HT-N-197.74	197.73	2.05	Temporary	Gravel	New	YES	330		
1	H	AR-N-199.79	199.78	1.97	Temporary	Gravel	New	YES	253		
1	H	AR-GA-N-201.76	201.75	0.17	Temporary	Gravel	New	YES	264		
1	H	AR-GA-N-201.93	201.92	2.80	Temporary	Gravel	New	YES	277		
1	H	AR-GA-N-204.73	204.72	0.13	Temporary	Gravel	New	YES	859		
1	H	AR-GA-PSY-N-204.86	204.85	1.39	Temporary	Gravel	New	YES	853		
1	H	CAMP-N-206.5	206.24	0.25	Temporary	Gravel	New	NO	3,417		
1	H	AR-XG-N-206.5	206.49	0.09	Temporary	Gravel	New	YES	160		
1	H	AR-XG-N-206.59	206.58	0.00	Temporary	Gravel	New	YES	303		
1	H	CAMP-E-206.5	206.58	1.45	Temporary	Gravel	Existing	NO	635		
1	H	AR-N-208.05	208.03	0.56	Temporary	Gravel	New	YES	245		
1	H	SBY-N-208.6	208.59	0.00	Temporary	Gravel	New	NO	96		
1	H	AR-GA-HT-E-208.6	208.59	0.23	Temporary	Gravel	Existing	YES	141		
1	**H**	**AR-GA-N-208.83**	**208.82**	**0.58**	**Temporary**	**Gravel**	**New**	**YES**	**123**	**32**	**0.8**
2	A	AR-MLBV-N-209.41	209.40	0.78	Temporary	Gravel	New	YES	106		
2	A	AR-XG-N-210.19	210.18	0.08	Temporary	Gravel	New	YES	357		
2	A	AR-XG-N-210.27	210.26	0.69	Temporary	Gravel	New	YES	138		

Spread	Section	ROW Access Name	Milepost	Miles to Next AR	Road Type	Material	Status	On Centerline	Road Length (feet)	No. AR per Section	Average AR Spacing
2	A	AR-GA-N-210.96	210.95	0.78	Temporary	Gravel	New	YES	125		
2	A	AR-GA-N-211.74	211.73	1.12	Temporary	Gravel	New	YES	995		
2	A	AR-N-212.86	212.85	0.70	Temporary	Gravel	New	YES	394		
2	A	AR-N-213.56	213.55	1.80	Temporary	Gravel	New	YES	627		
2	A	AR-N-215.36	215.35	1.98	Temporary	Gravel	New	YES	856		
2	A	AR-N-217.34	217.33	1.02	Temporary	Gravel	New	YES	530		
2	A	AR-N-218.36	218.35	0.44	Temporary	Gravel	New	YES	217		
2	A	AR-GA-MS-PSY-E-218.8	218.79	0.41	Temporary	Gravel	Existing	YES	1,053		
2	A	AR-GA-N-219.21	219.20	0.63	Temporary	Gravel	New	YES	226		
2	A	AR-GA-N-219.84	219.83	0.09	Temporary	Gravel	New	YES	924		
2	A	AR-GA-N-219.93	219.92	1.44	Temporary	Gravel	New	YES	986		
2	A	AR-N-221.37	221.36	2.13	Temporary	Gravel	New	YES	2,826		
2	A	AR-MLBV-N-223.5	223.49	4.54	Temporary	Gravel	New	YES	1,092		
2	A	AR-XG-N-228.04	228.03	0.12	Temporary	Gravel	New	YES	420		
2	A	AR-XG-N-228.17	228.15	0.70	Temporary	Gravel	New	YES	310		
2	A	AR-E-228.86	228.85	0.54	Temporary	Gravel	Existing	YES	138		
2	B	MS-E-229.4	229.39	0.09	Temporary	Gravel	Existing	NO	72		
2	B	AR-E-229.5	229.48	1.49	Temporary	Gravel	Existing	YES	387		
2	B	AR-XG-N-230.99	230.97	0.16	Temporary	Gravel	New	YES	663		
2	B	AR-XG-N-231.14	231.13	2.20	Temporary	Gravel	New	YES	188		
2	B	AR-N-233.34	233.33	1.45	Temporary	Gravel	New	YES	198		
2	B	MS-N-234.95	234.78	0.15	Temporary	Gravel	New	NO	3,655		
2	B	AR-N-234.95	234.93	1.15	Temporary	Gravel	New	YES	132		
2	B	AR-MS-HT-E-236.09	236.08	0.60	Temporary	Gravel	Existing	YES	7,832		
2	B	AR-E-236.69	236.68	0.01	Temporary	Gravel	Existing	YES	158		
2	B	WD-E-237.1	236.69	1.68	Temporary	Gravel	Existing	NO	259		
2	B	AR-N-238.39	238.37	1.62	Temporary	Gravel	New	YES	140		
2	B	AR-MLBV-CS-N-240	239.99	0.21	Permanent	Gravel	New	YES	1,245		
2	B	AR-CS-N-240.21	240.20	0.62	Permanent	Gravel	New	NO	180		
2	B	AR-GA-N-240.84	240.82	0.23	Temporary	Gravel	New	YES	1,070		
2	B	CAMP-PSY-E-241.07	241.05	0.00	Temporary	Gravel	Existing	NO	1,702		
2	B	CAMP-PSY-I-241.07	241.05	0.12	Temporary	Gravel	Improve	NO	1,548		

Spread	Section	ROW Access Name	Milepost	Miles to Next AR	Road Type	Material	Status	On Centerline	Road Length (feet)	No. AR per Section	Average AR Spacing
2	C	AR-PSY-I-241.18	241.17	2.45	Temporary	Gravel	Improve	YES	300		
2	C	MS-E-243.64	243.62	0.28	Temporary	Gravel	Existing	NO	674		
2	C	AR-E-243.92	243.90	2.16	Temporary	Gravel	Existing	YES	252		
2	C	AR-GA-N-246.08	246.06	0.73	Temporary	Gravel	New	YES	1,707		
2	C	AR-GA-N-246.8	246.79	1.43	Temporary	Gravel	New	YES	572		
2	C	AR-N-248.23	248.22	1.26	Temporary	Gravel	New	YES	303		
2	C	AR-N-249.49	249.48	2.32	Temporary	Gravel	New	YES	146		
2	D	AR-N-251.82	251.80	0.45	Temporary	Gravel	New	YES	959		
2	D	AR-XG-N-252.26	252.25	0.04	Temporary	Gravel	New	YES	181		
2	D	AR-XG-N-252.31	252.29	3.05	Temporary	Gravel	New	YES	214		
2	D	PSY-N-255.43	255.34	0.08	Temporary	Gravel	New	NO	622		
2	D	AR-PSY-E-255.43	255.42	1.96	Temporary	Gravel	Existing	YES	1,797		
2	D	AR-MLBV-E-257.4	257.38	0.40	Temporary	Gravel	Existing	YES	394		
2	D	AR-XG-E-257.79	257.78	0.00	Temporary	Gravel	Existing	YES	601		
2	D	AR-XG-N-257.79	257.78	1.31	Temporary	Gravel	New	YES	1,794		
2	D	AR-N-259.1	259.09	0.70	Temporary	Gravel	New	YES	443		
2	D	AR-XG-N-259.8	259.79	0.16	Temporary	Gravel	New	YES	801		
2	D	AR-XG-N-259.96	259.95	0.67	Temporary	Gravel	New	YES	268		
2	D	AR-GA-N-260.63	260.62	0.18	Temporary	Gravel	New	YES	618		
2	D	AR-GA-MS-HT-N-260.81	260.80	1.90	Temporary	Gravel	New	YES	926		
2	D	AR-E-262.71	262.70	1.56	Temporary	Gravel	Existing	YES	349		
2	D	AR-I-264.27	264.26	3.29	Temporary	Gravel	Improve	YES	431		
2	D	AR-I-267.56	267.55	1.99	Temporary	Gravel	New	YES	706		
2	D	AR-N-269.56	269.54	1.70	Temporary	Gravel	New	YES	177		
2	D	AR-MLBV-N-271.26	271.24	0.67	Temporary	Gravel	New	YES	628		
2	D	MS-E-271.93	271.91	0.36	Temporary	Gravel	Existing	NO	3,853		
2	D	AR-GA-N-272.29	272.27	0.12	Temporary	Gravel	New	YES	1,717		
2	D	AR-GA-E-272.65	272.39	0.25	Temporary	Gravel	Existing	NO	235		
2	D	AR-GA-N-272.65	272.64	3.73	Temporary	Gravel	New	YES	2,166		
2	D	AR-N-276.39	276.37	1.72	Temporary	Gravel	New	YES	4,840		
2	D	AR-N-278.11	278.09	0.82	Temporary	Gravel	New	YES	6,010		
2	D	CAMP-PSY-E-278.93	278.91	0.19	Temporary	Gravel	Existing	NO	120		

Spread	Section	ROW Access Name	Milepost	Miles to Next AR	Road Type	Material	Status	On Centerline	Road Length (feet)	No. AR per Section	Average AR Spacing
2	D	CAMP-PSY-E-279.12	279.10	0.02	Temporary	Gravel	Existing	NO	1,713		
2	D	AR-E-278.11	279.12	2.17	Temporary	Gravel	Existing	NO	4,581		
2	D	AR-HT-E-281.44	281.29	0.15	Temporary	Gravel	New	NO	1,365		
2	D	AR-HT-N-281.44	281.44	0.15	Temporary	Gravel	New	YES	2,016		
2	E	ALT-MS-281.61	281.59	0.09	Temporary	Gravel	New	YES	2,143		
2	E	ALT-MS-281.61	281.68	1.99	Temporary	Gravel	New	NO	2,143		
2	E	ALT-MS-283.69	283.67	0.04	Temporary	Gravel	New	YES	386		
2	E	AR-HT-N-283.72	283.71	0.11	Temporary	Gravel	New	YES	915		
2	E	AR-HT-I-283.72	283.82	1.69	Temporary	Gravel	Improve	NO	5,022		
2	E	AR-MLBV-E-285.61	285.51	0.08	Temporary	Gravel	Existing	NO	1,043		
2	E	AR-MLBV-HT-N-285.61	285.59	1.74	Temporary	Gravel	New	YES	956		
2	E	AR-GA-N-287.34	287.33	0.24	Temporary	Gravel	New	YES	933		
2	E	AR-GA-I-287.34	287.57	0.75	Temporary	Gravel	Improve	NO	4,778		
2	E	AR-GA-HT-I-288.38	288.32	0.04	Temporary	Gravel	Improve	NO	1,364		
2	E	AR-GA-HT-N-288.38	288.36	0.64	Temporary	Gravel	New	YES	590		
2	E	AR-GA-N-289.01	289.00	1.18	Temporary	Gravel	New	YES	1,405		
2	E	AR-GA-N-290.2	290.18	0.13	Temporary	Gravel	New	YES	431		
2	E	AR-GA-E-290.2	290.31	0.02	Temporary	Gravel	Existing	NO	1,338		
2	E	MS-N-290.2	290.33	2.01	Temporary	Gravel	New	NO	134		
2	E	AR-E-292.37	292.34	0.02	Temporary	Gravel	Existing	NO	524		
2	E	AR-N-292.37	292.36	4.16	Temporary	Gravel	New	YES	453		
2	E	AR-GA-HT-PSY-N-296.54	296.52	0.12	Temporary	Gravel	New	YES	861		
2	E	AR-GA-HT-PSY-E-296.54	296.64	1.09	Temporary	Gravel	Existing	NO	5,777		
2	E	AR-GA-I-297.93	297.73	0.19	Temporary	Gravel	Improve	NO	11,814		
2	E	AR-GA-N-297.93	297.92	0.85	Temporary	Gravel	New	YES	775		
2	E	MS-N-298.79	298.77	0.63	Temporary	Gravel	New	NO	103		
2	E	AR-GA-HT-E-299.68	299.40	0.27	Temporary	Gravel	Existing	NO	9,681		
2	E	AR-GA-HT-N-299.68	299.67	0.89	Temporary	Gravel	New	YES	357		
2	E	AR-GA-MS-I-300.74	300.56	0.17	Temporary	Gravel	Improve	NO	6,299		
2	E	AR-GA-MS-N-300.74	300.73	2.14	Temporary	Gravel	New	YES	1,065		
2	E	AR-HT-N-302.88	302.87	2.16	Temporary	Gravel	New	YES	719		
2	E	AR-GA-HT-N-305.04	305.03	0.41	Temporary	Gravel	New	YES	1,023		

Spread	Section	ROW Access Name	Milepost	Miles to Next AR	Road Type	Material	Status	On Centerline	Road Length (feet)	No. AR per Section	Average AR Spacing
2	E	AR-GA-CAMP-E-305.46	305.44	0.13	Temporary	Gravel	Existing	NO	1,019		
2	E	AR-GA-CAMP-N-305.58	305.57	0.27	Temporary	Gravel	New	YES	233		
2	E	MS-PSY-I-305.86	305.84	1.03	Temporary	Gravel	Improve	NO	784		
2	E	AR-GA-I-306.89	306.87	0.41	Temporary	Gravel	Improve	YES	784		
2	E	AR-GA-N-307.29	307.28	2.04	Temporary	Gravel	New	YES	373		
2	E	AR-HT-N-309.34	309.32	1.32	Temporary	Gravel	New	YES	200		
2	E	AR-XG-HT-N-310.66	310.64	0.09	Temporary	Gravel	New	YES	293		
2	E	AR-XG-N-310.74	310.73	1.88	Temporary	Gravel	New	YES	610		
2	E	ALT-MS-312.63	312.61	2.95	Temporary	Gravel	New	YES	925		
2	F	AR-N-315.57	315.56	2.08	Temporary	Gravel	New	YES	331		
2	F	AR-MLBV-N-317.65	317.64	1.15	Temporary	Gravel	New	YES	234		
2	F	AR-GA-HT-N-318.81	318.79	0.27	Temporary	Gravel	New	YES	175		
2	F	AR-GA-N-319.08	319.06	2.87	Temporary	Gravel	New	YES	467		
2	F	AR-GA-N-321.95	321.93	0.54	Temporary	Gravel	New	YES	335		
2	F	AR-GA-N-322.48	322.47	2.21	Temporary	Gravel	New	YES	570		
2	F	AR-N-324.69	324.68	0.01	Temporary	Gravel	New	YES	288		
2	F	MS-PSY-E-324.69	324.69	0.94	Temporary	Gravel	Existing	NO	3,800		
2	F	AR-HT-N-325.64	325.63	1.03	Temporary	Gravel	New	YES	479		
2	F	AR-E-326.68	326.66	1.76	Temporary	Gravel	Existing	YES	354		
2	G	AR-HT-N-328.43	328.42	0.72	Temporary	Gravel	New	YES	245		
2	G	AR-HT-N-329.16	329.14	1.84	Temporary	Gravel	New	YES	372		
2	G	AR-N-331	330.98	1.64	Temporary	Gravel	New	YES	193		
2	G	AR-MLBV-CS-HT-N-332.6	332.62	1.49	Permanent	Gravel	New	YES	207		
2	G	AR-GA-N-334.12	334.11	0.06	Temporary	Gravel	New	YES	137		
2	G	AR-GA-N-334.18	334.17	0.47	Temporary	Gravel	New	YES	140		
2	G	AR-GA-N-334.66	334.64	2.35	Temporary	Gravel	New	YES	525		
2	G	MS-PSY-E-337.17	336.99	0.12	Temporary	Gravel	Existing	NO	2,365		
2	G	PSY-N-337.17	337.11	0.04	Temporary	Gravel	New	NO	934		
2	G	AR-N-337.17	337.15	0.86	Temporary	Gravel	New	YES	1,571		
2	G	AR-N-338.03	338.01	1.37	Temporary	Gravel	New	YES	440		
2	G	AR-MS-N-339.39	339.38	0.45	Temporary	Gravel	New	YES	346		
2	G	AR-HT-N-339.84	339.83	1.05	Temporary	Gravel	New	YES	530		

Spread	Section	ROW Access Name	Milepost	Miles to Next AR	Road Type	Material	Status	On Centerline	Road Length (feet)	No. AR per Section	Average AR Spacing
2	H	AR-N-340.9	340.88	0.70	Temporary	Gravel	New	YES	260		
2	H	AR-XG-N-341.6	341.58	0.10	Temporary	Gravel	New	YES	427		
2	H	AR-XG-N-341.7	341.68	0.11	Temporary	Gravel	New	YES	126		
2	H	AR-GA-N-341.80	341.79	0.02	Temporary	Gravel	New	YES	215		
2	H	AR-HT-GA-N-341.82	341.81	0.65	Temporary	Gravel	New	YES	207		
2	H	AR-XG-HT-N-342.48	342.46	0.33	Temporary	Gravel	New	YES	1,570		
2	H	AR-XG-GA-E-343.03	342.79	0.22	Temporary	Gravel	Existing	NO	2,240		
2	H	AR-XG-GA-N-343.03	343.01	0.42	Temporary	Gravel	New	YES	454		
2	H	AR-HT-GA-N-343.45	343.43	0.03	Temporary	Gravel	New	YES	327		
2	H	AR-HT-GA-E-343.45	343.46	0.77	Temporary	Gravel	Existing	NO	541		
2	H	SF-N-344.25	344.23	1.18	Temporary	Gravel	New	YES	10,769		
2	H	AR-GA-N-345.43	345.41	0.00	Temporary	Gravel	New	YES	323		
2	H	SF-N-344.25	345.41	1.33	Temporary	Gravel	New	YES	10,769		
2	H	AR-HT-N-346.76	346.74	0.97	Temporary	Gravel	New	YES	1,359		
2	H	AR-XG-N-347.73	347.71	0.11	Temporary	Gravel	New	YES	214		
2	H	AR-XG-N-347.83	347.82	0.64	Temporary	Gravel	New	YES	516		
2	I	AR-MLBV-E-348.48	348.46	0.01	Temporary	Gravel	Existing	YES	630		
2	I	MS-E-348.48	348.47	2.57	Temporary	Gravel	Existing	NO	4,180		
2	I	AR-XG-E-351.06	351.04	0.75	Temporary	Gravel	Existing	YES	1,068		
2	I	AR-XG-N-351.81	351.79	0.69	Temporary	Gravel	New	YES	187		
2	I	AR-XG-N-352.49	352.48	1.04	Temporary	Gravel	New	YES	1,849		
2	I	AR-PSY-N-353.55	353.52	0.26	Temporary	Gravel	New	YES	1,384		
2	I	CAMP-PSY-N-353.43	353.78	2.00	Temporary	Gravel	New	NO	85		
2	I	AR-HT-N-355.79	355.78	1.66	Temporary	Gravel	New	YES	618		
2	J	AR-XG-PSY-E-357.45	357.44	0.81	Temporary	Gravel	Existing	YES	830		
2	J	AR-XG-N-358.26	358.25	0.02	Temporary	Gravel	New	YES	185		
2	J	AR-XG-E-358.29	358.27	0.02	Temporary	Gravel	Existing	YES	306		
2	J	AR-XG-N-358.31	358.29	0.66	Temporary	Gravel	New	YES	180		
2	J	AR-E-358.96	358.95	4.53	Temporary	Gravel	Existing	YES	124		
2	J	AR-MLBV-HT-E-363.5	363.48	0.00	Temporary	Gravel	Existing	YES	661		
2	J	WD-E-364	363.48	1.40	Temporary	Gravel	Existing	YES	1,106		
2	J	AR-MS-E-364.88	364.88	0.11	Temporary	Gravel	Existing	NO	3,004		

Spread	Section	ROW Access Name	Milepost	Miles to Next AR	Road Type	Material	Status	On Centerline	Road Length (feet)	No. AR per Section	Average AR Spacing
2	J	MS-N-365.01	364.99	3.24	Temporary	Gravel	New	YES	2,167		
2	J	AR-E-368.24	368.23	1.89	Temporary	Gravel	Existing	YES	780		
2	J	AR-XG-N-370.14	370.12	0.09	Temporary	Gravel	New	YES	654		
2	J	PSY-E-370.22	370.21	0.07	Temporary	Gravel	Existing	NO	1,209		
2	J	AR-XG-HT-N-370.3	370.28	0.33	Temporary	Gravel	New	YES	590		
2	J	AR-XG-N-370.63	370.61	1.25	Temporary	Gravel	New	YES	513		
2	J	AR-MS-N-371.88	371.86	0.01	Temporary	Gravel	New	YES	198		
2	J	AR-MS-E-371.88	371.87	1.85	Temporary	Gravel	Existing	NO	3,806		
2	J	AR-GA-E-373.74	373.72	2.73	Temporary	Gravel	Existing	YES	1,026		
2	J	AR-GA-E-376.47	376.45	1.35	Temporary	Gravel	Existing	YES	109		
2	K	AR-MLBV-PSY-E-377.82	377.80	0.12	Temporary	Gravel	Existing	YES	1,085		
2	K	MS-E-377.82	377.92	1.60	Temporary	Gravel	Existing	NO	3,687		
2	K	AR-E-379.54	379.52	0.00	Temporary	Gravel	Existing	YES	119		
2	K	WD-E-380.1	379.52	0.98	Temporary	Gravel	Existing	NO	55		
2	K	AR-HT-I-380.52	380.50	1.68	Temporary	Gravel	Improve	YES	224		
2	K	MS-N-382.34	382.18	0.14	Temporary	Gravel	New	NO	45		
2	K	AR-MS-HT-E-382.34	382.32	1.86	Temporary	Gravel	Existing	YES	6,940		
2	L	AR-N-384.2	384.18	0.79	Temporary	Gravel	New	YES	1,014		
2	L	SF-N-384.99	384.97	0.43	Temporary	Gravel	New	YES	2,936		
2	L	SF-N-384.99	385.40	0.00	Temporary	Gravel	New	YES	2,936		
2	L	SF-N-385.41	385.40	0.23	Temporary	Gravel	New	YES	1,639		
2	L	SF-N-385.41	385.63	8.34	Temporary	Gravel	New	YES	1,639		
2	L	AR-GA-MS-MLBV-PSY-I-	393.97	0.42	Temporary	Gravel	Improve	YES	10,707		
2	L	MS-N-393.99	394.39	0.95	Temporary	Gravel	New	NO	323		
2	L	AR-GA-E-395.36	395.34	2.79	Temporary	Gravel	Existing	YES	3,347		
2	L	AR-XG-N-398.15	398.13	0.09	Temporary	Gravel	New	YES	231		
2	L	AR-XG-HT-N-398.24	398.22	2.41	Temporary	Gravel	New	YES	472		
2	L	AR-XG-HT-N-400.65	400.63	0.45	Temporary	Gravel	New	YES	653		
3	A	CAMP-E-401.2	401.08	0.07	Temporary	Gravel	Existing	NO	225		
3	A	AR-E-401.2	401.15	0.03	Temporary	Gravel	Existing	NO	1,430		
3	A	AR-N-401.2	401.18	0.80	Temporary	Gravel	New	YES	1,117		
3	A	MS-N-402	401.98	2.92	Temporary	Gravel	New	YES	1,284		

Spread	Section	ROW Access Name	Milepost	Miles to Next AR	Road Type	Material	Status	On Centerline	Road Length (feet)	No. AR per Section	Average AR Spacing
3	A	AR-MLBV-HT-PSY-I-409.	404.90	0.92	Temporary	Gravel	Improve	NO	39,803		
3	A	MS-N-405.84	405.82	2.28	Temporary	Gravel	New	YES	1,812		
3	A	SF-N-408.12	408.10	1.69	Temporary	Gravel	New	YES	17,797		
3	B	AR-MLBV-HT-PSY-N-409	409.79	1.75	Temporary	Gravel	New	YES	26,926		
3	B	SF-N-408.12	411.54	1.14	Temporary	Gravel	New	YES	17,797		
3	B	ALT-MS-412.7	412.68	1.33	Temporary	Gravel	New	NO	410		
3	B	MS-N-414.03	414.01	1.48	Temporary	Gravel	New	YES	7,319		
3	B	AR-TL-MLBV-CS-HT-N-4	415.49	24.11	Permanent	Gravel	New	NO	61,809		
3	C	AR-MS-N-439.62	439.60	0.94	Temporary	Gravel	New	YES	16,645		
3	C	MS-N-442.89	440.54	0.00	Temporary	Gravel	New	NO	228		
3	C	MS-N-442.89	440.54	0.42	Temporary	Gravel	New	NO	228		
3	C	ALT-MS-439.62	440.96	1.91	Temporary	Gravel	New	NO	786		
3	C	AR-MS-N-442.89	442.87	0.36	Permanent	Gravel	New	YES	69,747		
3	C	MS-N-442.89	443.23	0.21	Temporary	Gravel	New	NO	228		
3	C	AR-MS-E-442.89	443.44	2.26	Permanent	Gravel	Existing	NO	42,384		
3	C	MS-N-445.72	445.70	4.00	Temporary	Gravel	New	YES	77		
3	C	AR-MLBV-CS-MS-N-442.	449.70	5.95	Temporary	Gravel	New	YES	165		
3	C	AR-MLBV-CAMP-HT-PSY	455.65	2.94	Temporary	Gravel	New	YES	8,240		
3	C	AR-MLBV-CS-MS-E-442.	458.59	0.03	Temporary	Gravel	New	NO	21,935		
3	C	MS-N-458.64	458.62	0.67	Temporary	Gravel	New	NO	197		
3	C	MS-N-459.31	459.29	1.47	Temporary	Gravel	New	NO	94		
3	C	MS-N-460.78	460.76	3.58	Temporary	Gravel	New	NO	157		
3	C	AR-MS-E-464.37	464.34	0.13	Temporary	Gravel	Existing	YES	14,930		
3	C	AR-MS-N-464.37	464.47	1.93	Temporary	Gravel	New	NO	2,000		
3	C	ALT-MS-466.42	466.40	0.49	Temporary	Gravel	New	NO	170		
3	C	AR-MLBV-N-466.91	466.89	0.89	Temporary	Gravel	New	YES	3,859		
3	C	AR-MLBV-E-466.91	467.78	1.24	Temporary	Gravel	Existing	NO	2,082		
3	C	ALT-MS-469.05	469.02	1.17	Temporary	Gravel	New	NO	241		
3	C	AR-MS-N-470.21	470.19	0.18	Temporary	Gravel	New	YES	100		
3	C	ALT-MS-470.4	470.37	0.33	Temporary	Gravel	New	NO	276		
3	C	AR-XG-N-470.73	470.70	0.11	Temporary	Gravel	New	YES	457		
3	C	AR-XG-N-470.84	470.81	0.00	Temporary	Gravel	New	YES	157		

Spread	Section	ROW Access Name	Milepost	Miles to Next AR	Road Type	Material	Status	On Centerline	Road Length (feet)	No. AR per Section	Average AR Spacing
3	C	AR-XG-E-470.84	470.81	0.88	Temporary	Gravel	Existing	NO	99		
3	C	AR-SP-E-471.72	471.69	0.93	Temporary	Gravel	Existing	YES	1,159		
3	C	AR-GA-N-472.65	472.62	1.14	Temporary	Gravel	New	YES	129		
3	D	AR-GA-MS-PSY-I-473.78	473.76	9.70	Temporary	Gravel	Existing	YES	2,425		
3	E	MS-N-483.49	483.46	8.99	Temporary	Gravel	New	YES	653		
3	F	ALT-MS-492.47	492.45	3.59	Temporary	Gravel	New	NO	1,888		
3	F	SP-E-496.01	496.04	2.54	Temporary	Gravel	Existing	NO	4,392		
3	F	AR-MS-CAMP-N-498.59	498.58	0.00	Temporary	Gravel	New	YES	2,381		
3	F	AR-XG-N-498.59	498.58	0.02	Temporary	Gravel	New	YES	747		
3	F	CAMP-I-498.59	498.60	0.01	Temporary	Gravel	Improve	NO	1,191		
3	G	PSY-N-498.59	498.61	0.07	Temporary	Gravel	New	NO	344		
3	G	AR-XG-E-498.59	498.68	0.09	Temporary	Gravel	Existing	NO	188		
3	G	AR-XG-N-498.79	498.77	0.19	Temporary	Gravel	New	YES	867		
3	G	ALT-MS-498.98	498.96	0.32	Temporary	Gravel	New	NO	1,364		
3	G	CAMP-PSY-N-499.44	499.28	0.14	Temporary	Gravel	New	NO	3,715		
3	G	AR-N-499.44	499.42	0.53	Temporary	Gravel	New	YES	767		
3	G	ALT-MS-499.97	499.95	0.46	Temporary	Gravel	New	NO	104		
3	G	ALT-MS-500.42	500.41	2.26	Temporary	Gravel	New	NO	731		
3	G	ALT-MS-502.69	502.67	2.79	Temporary	Gravel	New	NO	116		
3	G	AR-MS-N-505.48	505.46	1.91	Temporary	Gravel	New	YES	898		
3	G	AR-HT-N-507.39	507.37	0.40	Temporary	Gravel	New	YES	1,507		
3	G	ALT-MS-507.79	507.77	1.71	Temporary	Gravel	New	NO	773		
3	G	AR-N-509.5	509.48	2.72	Temporary	Gravel	New	YES	1,354		
3	G	AR-N-512.22	512.20	0.81	Temporary	Gravel	New	YES	201		
3	G	AR-MS-E-513.03	513.01	1.67	Temporary	Gravel	Existing	YES	813		
3	G	AR-MS-E-514.7	514.68	1.57	Temporary	Gravel	Existing	YES	1,403		
3	G	AR-N-516.27	516.25	1.62	Temporary	Gravel	New	YES	1,846		
3	G	AR-MLBV-CS-HT-N-517.9	517.87	0.04	Permanent	Gravel	New	NO	1,592		
3	G	MS-N-517.9	517.91	0.61	Temporary	Gravel	New	NO	229		
3	G	ALT-MS-518.54	518.52	0.41	Temporary	Gravel	New	NO	147		
3	G	ALT-MS-518.95	518.93	0.59	Temporary	Gravel	New	NO	63		
3	G	AR-GA-I-519.54	519.52	0.27	Temporary	Gravel	Existing	YES	954		

Spread	Section	ROW Access Name	Milepost	Miles to Next AR	Road Type	Material	Status	On Centerline	Road Length (feet)	No. AR per Section	Average AR Spacing
3	G	AR-GA-MS-N-519.81	519.79	0.17	Temporary	Gravel	New	YES	649		
3	G	ALT-MS-519.98	519.96	0.84	Temporary	Gravel	New	NO	61		
3	G	AR-HT-N-520.82	520.80	0.02	Temporary	Gravel	New	YES	430		
3	G	AR-HT-E-520.82	520.82	0.88	Temporary	Gravel	Existing	NO	744		
3	H	AR-XG-N-521.71	521.70	0.02	Temporary	Gravel	New	YES	686		
3	H	ALT-MS-521.74	521.72	0.11	Temporary	Gravel	New	NO	329		
3	H	AR-XG-N-521.85	521.83	0.27	Temporary	Gravel	New	YES	519		
3	H	ALT-MS-522.12	522.10	1.03	Temporary	Gravel	New	NO	203		
3	H	AR-XG-N-523.15	523.13	0.09	Temporary	Gravel	New	YES	249		
3	H	AR-XG-N-523.24	523.22	2.30	Temporary	Gravel	New	YES	367		
3	H	AR-I-526.02	525.52	0.27	Temporary	Gravel	Improve	NO	5,845		
3	H	MS-N525.81	525.79	0.22	Temporary	Gravel	New	NO	1,624		
3	H	AR-HT-N-526.02	526.01	0.94	Temporary	Gravel	Existing	YES	2,956		
3	H	AR-CAMP-I-526.97	526.95	1.82	Temporary	Gravel	Existing	YES	3,612		
3	H	CAMP-PSY-E-528.79	528.77	0.07	Temporary	Gravel	Existing	NO	402		
3	H	CAMP-PSY-N-526.97	528.84	0.35	Temporary	Gravel	New	NO	248		
3	H	AR-N-529.2	529.19	0.61	Temporary	Gravel	New	YES	581		
3	H	ALT-MS-529.82	529.80	1.15	Temporary	Gravel	New	NO	111		
3	H	AR-GA-N-530.97	530.95	0.82	Temporary	Gravel	New	YES	262		
3	H	AR-GA-N-531.78	531.77	3.03	Temporary	Gravel	New	YES	590		
3	I	AR-MLBV-GA-N-535	534.80	1.35	Temporary	Gravel	New	NO	187		
3	J	AR-GA-N-536.36	536.15	0.11	Temporary	Gravel	New	YES	580		
3	J	AR-GA-N-536.47	536.26	0.69	Temporary	Gravel	New	YES	758		
3	J	SF-N-537.15	536.95	0.17	Temporary	Gravel	New	YES	1,529		
3	J	SF-N-537.15	537.12	0.68	Temporary	Gravel	New	YES	1,529		
3	J	SF-N-538.01	537.80	0.20	Temporary	Gravel	New	YES	2,432		
3	J	SF-N-538.01	538.00	3.94	Temporary	Gravel	New	YES	2,432		
3	K	SF-N-542.15	541.94	0.32	Temporary	Gravel	New	YES	5,819		
3	K	SF-N-542.15	542.26	0.19	Temporary	Gravel	New	YES	5,819		
3	K	SF-N-542.66	542.45	0.42	Temporary	Gravel	New	YES	1,778		
3	K	SF-N-543.08	542.87	0.26	Temporary	Gravel	New	YES	1,168		
3	L1	SF-N-543.08	543.13	3.34	Temporary	Gravel	New	YES	1,168		

Spread	Section	ROW Access Name	Milepost	Miles to Next AR	Road Type	Material	Status	On Centerline	Road Length (feet)	No. AR per Section	Average AR Spacing
3	L1	AR-N-546.68	546.47	1.41	Temporary	Gravel	New	YES	432		
3	L1	AR-MLBV-HT-N-548.09	547.88	3.28	Permanent	Gravel	New	YES	3,585		
3	L1	AR-PSY-N-551.37	551.16	0.02	Temporary	Gravel	New	NO	214		
3	L1	AR-PSY-N-551.39	551.18	0.18	Temporary	Gravel	New	YES	336		
3	L1	AR-PSY-N-551.37	551.36	0.67	Temporary	Gravel	New	NO	214		
3	L1	AR-PSY-N-551.38	552.03	1.03	Temporary	Gravel	New	YES	2,232		
3	L1	AR-HT-I-553.26	553.06	0.50	Temporary	Gravel	Improve	YES	142		
3	L1	ALT-MS-553.76	553.56	0.00	Temporary	Gravel	New	YES	411		
3	L1	AR-N-553.76	553.56	2.29	Temporary	Gravel	new	YES	419		
3	L1	AR-GA-N-556.06	555.85	0.71	Temporary	Gravel	New	YES	766		
3	L1	AR-GA-N-556.77	556.56	2.44	Temporary	Gravel	New	YES	976		
3	L1	AR-E-559.21	559.00	0.30	Temporary	Gravel	Existing	YES	216		
3	L1	AR-MS-E-559.51	559.30	0.48	Temporary	Gravel	Existing	YES	187		
3	L1	AR-MLBV-GA-E-559.99	559.78	0.07	Temporary	Gravel	Existing	YES	1,165		
3	L1	SF-N-560.06	559.85	0.30	Temporary	Gravel	New	YES	2,519		
3	L1	MS-N-560.36	560.15	0.12	Temporary	Gravel	New	NO	316		
3	L1	SF-N-560.06	560.27	1.53	Temporary	Gravel	New	YES	2,519		
3	L1	AR-HT-N-562	561.80	4.30	Permanent	Gravel	New	YES	3,745		
3	L1	MS-N-566.3	566.10	0.26	Temporary	Gravel	New	YES	100		
3	L1	AR-XG-HT-N-566.57	566.36	0.04	Temporary	Gravel	New	YES	152		
3	L1	AR-XG-HT-E-566.57	566.40	0.08	Temporary	Gravel	Existing	NO	387		
3	L1	AR-XG-N-566.69	566.48	0.07	Temporary	Gravel	New	YES	477		
3	L1	AR-MS-E-566.75	566.55	0.21	Temporary	Gravel	Existing	NO	130		
3	L1	AR-GA-E-566.96	566.76	0.52	Temporary	Gravel	Existing	YES	1,541		
3	L2	AR-MS-CAMP-E-567.48	567.28	0.45	Temporary	Gravel	Existing	YES	2,508		
3	L2	CAMP-E-567.94	567.73	0.85	Temporary	Gravel	Existing	NO	563		
3	L2	PSY-SP-N-568.79	568.58	2.34	Temporary	Gravel	New	NO	680		
3	L2	AR-I-571.12	570.92	1.58	Temporary	Gravel	Existing	YES	269		
3	L2	AR-XG-N-572.7	572.50	0.19	Temporary	Gravel	New	YES	340		
3	L2	AR-XG-N-572.89	572.69	1.19	Temporary	Gravel	New	YES	1,021		
3	L2	AR-XG-N-574.09	573.88	1.80	Temporary	Gravel	New	YES	1,317		
3	L2	AR-E-576.1	575.68	0.21	Temporary	Gravel	Existing	NO	608		

Spread	Section	ROW Access Name	Milepost	Miles to Next AR	Road Type	Material	Status	On Centerline	Road Length (feet)	No. AR per Section	Average AR Spacing
3	L2	AR-N-576.1	575.89	1.56	Temporary	Gravel	New	YES	2,502		
3	L2	AR-MLBV-I-577.67	577.45	1.41	Temporary	Gravel	Improve	YES	2,394		
3	L2	AR-N-579.08	578.86	2.28	Temporary	Gravel	New	YES	1,261		
3	L2	AR-PSY-N-581.36	581.14	0.01	Temporary	Gravel	New	YES	282		
3	L2	AR-PSY-N-581.37	581.15	1.12	Temporary	Gravel	New	NO	126		
3	L2	MS-I-582.49	582.27	0.04	Temporary	Gravel	Improve	NO	2,054		
3	L2	AR-HT-E-582.84	582.31	0.31	Temporary	Gravel	Existing	NO	422		
3	L2	AR-HT-N-582.84	582.62	0.99	Temporary	Gravel	New	YES	2,691		
3	L2	SP-E-583.86	583.61	0.24	Temporary	Gravel	Existing	NO	1,120		
3	L2	SP-N-584.08	583.85	4.15	Temporary	Gravel	New	NO	948		
3	L2	AR-XG-N-588.23	588.00	0.31	Temporary	Gravel	New	YES	1,604		
3	L2	AR-XG-N-588.53	588.31	4.30	Temporary	Gravel	New	YES	543		
3	L2	AR-N-592.83	592.61	0.03	Temporary	Gravel	New	YES	4,821		
3	L2	ALT-MS-592.87	592.64	0.97	Temporary	Gravel	New	NO	70		
3	L2	ALT-MS-593.83	593.61	0.00	Temporary	Gravel	New	YES	207		
3	L2	SF-N-593.83	593.61	0.41	Temporary	Gravel	New	YES	2,887		
3	L2	SF-N-593.83	594.02	1.73	Temporary	Gravel	New	YES	2,887		
3	L2	AR-MS-HT-N-595.97	595.75	2.43	Temporary	Gravel	New	YES	3,769		
3	L2	AR-MLBV-CS-HT-N-598.5	598.18	0.05	Permanent	Gravel	New	NO	11,117		
3	L2	SF-N-598.46	598.23	0.63	Temporary	Gravel	New	YES	7,482		
3	L2	SF-N-598.46	598.86	1.85	Temporary	Gravel	New	YES	7,482		
3	L2	SF-N-600.9	600.71	0.61	Temporary	Gravel	New	YES	5,433		
3	L2	SF-N-600.9	601.32	1.99	Temporary	Gravel	New	YES	5,433		
3	L2	AR-N-603.46	603.31	0.00	Temporary	Gravel	New	YES	7,700		
3	L2	SF-N-603.46	603.31	0.43	Temporary	Gravel	New	YES	5,243		
3	L2	SF-N-603.46	603.74	2.93	Temporary	Gravel	New	YES	5,243		
3	L2	AR-CAMP-HT-N-606.81	606.67	0.22	Temporary	Gravel	New	YES	1,592		
3	L2	PSY-SP-N-606.81	606.89	0.04	Temporary	Gravel	New	NO	879		
3	L2	MS-E-607.07	606.93	0.03	Temporary	Gravel	Existing	NO	86		
3	L2	MS-N-607.07	606.96	0.17	Temporary	Gravel	New	NO	123		
3	L2	MS-N-607.27	607.13	0.53	Temporary	Gravel	New	NO	1,247		
4	A	AR-N-607.8	607.66	1.28	Temporary	Gravel	New	YES	266		

Spread	Section	ROW Access Name	Milepost	Miles to Next AR	Road Type	Material	Status	On Centerline	Road Length (feet)	No. AR per Section	Average AR Spacing
4	A	AR-XG-HT-N-609.09	608.94	0.13	Temporary	Gravel	New	YES	366		
4	A	AR-XG-N-609.21	609.07	2.98	Temporary	Gravel	New	YES	332		
4	A	AR-HT-N-612.19	612.05	0.08	Temporary	Gravel	Existing	YES	225		
4	A	ALT-MS-612.19	612.13	0.31	Temporary	Gravel	New	NO	1,392		
4	A	AR-XG-N-612.59	612.44	0.17	Temporary	Gravel	New	YES	178		
4	A	AR-XG-N-612.75	612.61	1.55	Temporary	Gravel	New	YES	787		
4	A	AR-GA-N-614.3	614.16	0.96	Temporary	Gravel	New	YES	3,084		
4	A	AR-GA-N-615.26	615.12	1.04	Temporary	Gravel	New	YES	2,109		
4	A	AR-MLBV-N-616.31	616.16	0.92	Temporary	Gravel	New	YES	942		
4	A	AR-N-617.22	617.08	0.39	Temporary	Gravel	New	YES	361		
4	A	ALT-MS-617.61	617.47	0.69	Temporary	Gravel	New	NO	511		
4	A	AR-E-618.45	618.16	0.15	Temporary	Gravel	Existing	NO	913		
4	A	AR-N-618.45	618.31	0.20	Temporary	Gravel	New	YES	1,112		
4	A	MS-PSY-E-618.65	618.51	0.87	Temporary	Gravel	Existing	NO	427		
4	A	ALT-MS-619.52	619.38	0.00	Temporary	Gravel	New	NO	387		
4	A	AR-N-619.52	619.38	2.94	Temporary	Gravel	New	YES	267		
4	A	AR-N-622.47	622.32	2.69	Temporary	Gravel	New	YES	1,070		
4	A	AR-XG-N-625.16	625.01	0.18	Temporary	Gravel	New	YES	660		
4	A	ALT-MS-625.33	625.19	0.00	Temporary	Gravel	New	YES	5,830		
4	A	AR-XG-N-625.33	625.19	3.00	Temporary	Gravel	New	YES	378		
4	A	AR-N-628.33	628.19	1.70	Temporary	Gravel	New	YES	195		
4	A	AR-HT-N-630.04	629.89	0.21	Temporary	Gravel	New	YES	232		
4	A	AR-XG-N-630.24	630.10	0.19	Temporary	Gravel	New	YES	272		
4	A	AR-N-630.43	630.29	0.26	Temporary	Gravel	New	YES	714		
4	A	ALT-MS-630.74	630.55	1.01	Temporary	Gravel	New	NO	3,090		
4	A	AR-XG-MLBV-N-631.7	631.56	0.13	Temporary	Gravel	New	YES	766		
4	A	AR-XG-N-631.84	631.69	2.02	Temporary	Gravel	New	YES	274		
4	A	AR-MS-N-633.85	633.71	0.69	Temporary	Gravel	New	YES	2,721		
4	A	AR-GA-N-634.55	634.40	1.92	Temporary	Gravel	New	YES	3,208		
4	A	ALT-MS-636.47	636.32	0.00	Temporary	Gravel	New	YES	298		
4	A	AR-N-636.47	636.32	1.29	Temporary	Gravel	New	YES	243		
4	A	MS-N-637.78	637.61	0.02	Temporary	Gravel	New	NO	523		
4	A	AR-N-637.78	637.63	2.70	Temporary	Gravel	New	YES	242		

Spread	Section	ROW Access Name	Milepost	Miles to Next AR	Road Type	Material	Status	On Centerline	Road Length (feet)	No. AR per Section	Average AR Spacing
4	A	AR-XG-N-640.47	640.33	0.18	Temporary	Gravel	New	YES	367		
4	A	AR-XG-N-640.65	640.51	0.25	Temporary	Gravel	New	YES	922		
4	A	AR-GA-N-640.91	640.76	0.20	Temporary	Gravel	New	YES	397		
4	A	AR-GA-HT-N-641.1	640.96	6.96	Temporary	Gravel	New	YES	565		
4	A	CAMP-PSY-N-648.08	647.92	0.02	Temporary	Gravel	New	NO	246		
4	A	AR-MLBV-CAMP-PSY-N-	647.94	0.10	Temporary	Gravel	New	YES	730		
4	A	AR-MLBV-CAMP-PSY-I-6	648.04	0.36	Temporary	Gravel	Improve	NO	1,062		
4	A	AR-XG-N-648.55	648.40	0.20	Temporary	Gravel	New	YES	775		
4	A	AR-XG-N-648.75	648.60	1.63	Temporary	Gravel	New	YES	306		
4	A	ALT-MS-650.37	650.23	1.34	Temporary	Gravel	New	YES	232		
4	A	AR-N-651.72	651.57	2.90	Temporary	Gravel	New	YES	546		
4	A	AR-N-654.62	654.47	1.51	Temporary	Gravel	New	YES	1,129		
4	A	AR-MS-N-656.13	655.98	2.83	Temporary	Gravel	New	YES	1,242		
4	A	AR-HT-N-658.96	658.81	2.24	Temporary	Gravel	New	YES	318		
4	A	AR-MLBV-I-661.19	661.05	0.12	Temporary	Gravel	Improve	YES	1,566		
4	A	ALT-MS-661.32	661.17	2.44	Temporary	Gravel	New	NO	261		
4	A	AR-N-663.76	663.61	1.05	Temporary	Gravel	New	YES	6,003		
4	A	AR-XG-N-664.8	664.66	0.07	Temporary	Gravel	New	YES	363		
4	A	AR-XG-N-664.88	664.73	2.65	Temporary	Gravel	New	YES	329		
4	B	ALT-MS-667.53	667.38	0.00	Temporary	Gravel	New	NO	310		
4	B	AR-N-667.53	667.38	0.59	Temporary	Gravel	New	YES	670		
4	B	ALT-MS-668.12	667.97	0.46	Temporary	Gravel	New	NO	97		
4	B	AR-N-668.58	668.43	1.69	Temporary	Gravel	New	YES	1,250		
4	B	AR-N-670.27	670.12	1.97	Temporary	Gravel	New	YES	514		
4	B	AR-PSY-N-672.24	672.09	0.78	Temporary	Gravel	Improve	YES	1,788		
4	B	ALT-MS-673.02	672.87	1.03	Temporary	Gravel	New	NO	234		
4	B	ALT-MS-674.05	673.90	0.71	Temporary	Gravel	New	NO	292		
4	B	AR-TL-CS-MLBV-MS-HT-	674.61	1.67	Permanent	Gravel	New	YES	105,301		
4	B	SP-E-676.43	676.28	9.30	Temporary	Gravel	Existing	NO	5,686		
4	B	MS-N-685.73	685.58	7.99	Temporary	Gravel	New	NO	997		
4	B	AR-CAMP-PSY-N-693.72	693.57	4.98	Temporary	Gravel	New	YES	146		
4	B	MS-N-698.7	698.55	5.97	Temporary	Gravel	New	YES	88		

Spread	Section	ROW Access Name	Milepost	Miles to Next AR	Road Type	Material	Status	On Centerline	Road Length (feet)	No. AR per Section	Average AR Spacing
4	C	SF-N-704.67	704.52	0.56	Temporary	Gravel	New	YES	2,930		
4	C	SF-N-704.67	705.08	10.50	Temporary	Gravel	New	YES	2,930		
4	C	ALT-MS-715.73	715.58	4.51	Temporary	Gravel	New	YES	78		
4	C	SF-N-720.24	720.09	1.28	Temporary	Gravel	New	YES	7,386		
4	C	PSY-MS-N-721.52	721.37	0.00	Temporary	Gravel	New	YES	1,145		
4	C	SF-N-720.24	721.37	3.48	Temporary	Gravel	New	YES	7,386		
4	C	SF-N-725	724.85	1.26	Temporary	Gravel	New	YES	7,303		
4	C	SF-N-725	726.11	1.54	Temporary	Gravel	New	YES	7,303		
4	C	SF-N-727.8	727.65	0.46	Temporary	Gravel	New	YES	2,767		
4	C	SF-N-727.8	728.11	1.98	Temporary	Gravel	New	YES	2,767		
4	C	ALT-MS-730.24	730.09	4.84	Temporary	Gravel	New	YES	160		
4	C	ALT-MS-735.08	734.93	4.90	Temporary	Gravel	New	YES	25		
4	C	MS-N-739.99	739.83	5.06	Temporary	Gravel	New	YES	254		
4	D	AR-HT-CAMP-PSY-N-745	744.89	0.99	Temporary	Gravel	New	YES	7,695		
4	D	AR-CAMP-PSY-I-745.04	745.88	3.36	Temporary	Gravel	Improve	NO	31,565		
4	D	AR-MLBV-CS-E-749.39	749.24	1.56	Permanent	Gravel	Existing	YES	30,169		
4	D	MS-E-750.95	750.80	0.00	Temporary	Gravel	Existing	YES	9,555		
4	D	MS-N-750.95	750.80	1.79	Temporary	Gravel	New	YES	156		
4	D	AR-I-749.39	752.59	3.55	Temporary	Gravel	Improve	NO	43,325		
4	D	AR-N-756.29	756.14	3.84	Temporary	Gravel	New	YES	4,122		
4	D	MS-N-760.13	759.98	5.30	Temporary	Gravel	New	YES	100		
4	D	AR-N-765.43	765.28	0.31	Temporary	Gravel	New	YES	668		
4	D	MOF-N-765.74	765.59	0.05	Temporary	Gravel	New	NO	632		
4	D	PSY-N-765.8	765.64	0.19	Temporary	Gravel	New	YES	505		
4	D	PSY-N-763.13	765.83	0.00	Temporary	Gravel	New	YES	261		
4	D	CAMP-PSY-N-766.22	765.83	0.15	Temporary	Gravel	New	NO	805		
4	D	MOF-ALT-N-766.34	765.98	0.09	Temporary	Gravel	New	NO	32		
4	D	MOF-ALT-N-766.36	766.07	0.12	Temporary	Gravel	New	NO	30		
4	D	ALT-MOF-N-766.34	766.19	0.02	Temporary	Gravel	New	YES	977		
4	D	ALT-MOF-N-766.36	766.21	27.08	Temporary	Gravel	New	NO	700		
4	E	AR-N-793.44	793.29	10.09	Temporary	Gravel	New	YES	156		
4	E	AR-CAMP-PSY-N-804.06	803.38	-803.38	Temporary	Gravel	New	NO	220		

Spread	Section	Feature Name	Milepost	Miles to Next AR	Road Type	Material	Status	On Centerline	Road Length (feet)	No. AR per Section	Average AR Spacing
1	A	MS-Dock-N-0	0.00	0.02	Temporary	Gravel	New	YES	2,255		
1	A	MS-Dock-E-0	0.02	0.52	Temporary	Gravel	Existing	NO	9,816		
1	A	CAMP-PSY-N-0.57	0.54	0.07	Temporary	Gravel	New	NO	976		
1	A	PSY-N-0.57	0.61	3.99	Temporary	Gravel	New	NO	488		
1	A	AR-WS-E-4.61	4.60	6.82	Temporary	Gravel	Existing	YES	5,662		
1	A	MS-E-11.43	11.42	6.21	Temporary	Gravel	Existing	NO	468		
1	A	MS-WS-E-18.13	17.63	0.10	Temporary	Gravel	Existing	NO	4,826		
1	A	MS-WS-I-18.13	17.73	0.39	Temporary	Gravel	Improve	NO	530		
1	A	AR-MLBV-N-18.13	18.12	6.18	Temporary	Gravel	New	YES	18,614		
1	A	MS-WS-E-24.31	24.30	0.41	Temporary	Gravel	Existing	NO	1,224		
1	A	PSY-N-24.71	24.71	3.50	Temporary	Gravel	New	NO	338		
1	A	AR-N-28.22	28.21	1.16	Temporary	Gravel	New	YES	189		
1	A	AR-WS-N-29.37	29.37	2.25	Temporary	Gravel	New	YES	136		
1	A	AR-N-31.63	31.62	0.00	Temporary	Gravel	New	YES	118		
1	A	WS-E-31.63	31.62	1.98	Temporary	Gravel	Existing	NO	4,121		
1	A	ALT-MS-33.6	33.60	0.62	Temporary	Gravel	New	YES	1,887		
1	A	AR-N-34.23	34.22	0.01	Temporary	Gravel	New	YES	143		
1	A	MS-E-34.23	34.23	0.00	Temporary	Gravel	Existing	NO	1,094		
1	A	ALT-MS-34.23	34.23	1.42	Temporary	Gravel	New	NO	498		
1	A	MS-WS-E-35.66	35.65	0.00	Temporary	Gravel	Existing	NO	1,342		
1	A	AR-HT-N-35.66	35.65	1.09	Temporary	Gravel	New	YES	379		
1	A	AR-MLBV-N-36.75	36.74	3.44	Temporary	Gravel	New	YES	138		
1	A	ALT-MS-40.33	40.18	0.08	Temporary	Gravel	New	NO	488		
1	A	MS-E-40.33	40.26	3.38	Temporary	Gravel	Existing	NO	2,469		
1	A	CAMP-E-43.65	43.64	0.00	Temporary	Gravel	Existing	NO	366		
1	A	AR-N-43.65	43.64	0.10	Temporary	Gravel	New	YES	168		
1	A	PSY-E-43.75	43.74	2.96	Temporary	Gravel	Existing	NO	368		
1	A	MS-E-46.71	46.70	0.09	Temporary	Gravel	Existing	YES	7,028		
1	A	MS-N-46.71	46.79	1.04	Temporary	Gravel	New	NO	1,138		
1	A	AR-N-47.84	47.83	6.76	Temporary	Gravel	New	YES	208		
1	A	WS-E-54.64	54.59	1.77	Temporary	Gravel	Existing	NO	2,618		
1	A	MS-N-56.64	56.36	0.11	Temporary	Gravel	New	NO	144		

Spread	Section	Feature Name	Milepost	Miles to Next AR	Road Type	Material	Status	On Centerline	Road Length (feet)	No. AR per Section	Average AR Spacing
1	A	MS-E-56.64	56.47	0.16	Temporary	Gravel	Existing	NO	883		
1	**A**	**AR-MLBV-HT-N-56.64**	**56.63**	**2.33**	**Temporary**	**Gravel**	**New**	**YES**	**1,577**	**34**	**1.7**
1	B	AR-N-58.96	58.96	4.29	Temporary	Gravel	New	YES	2,684		
1	B	AR-XG-N-63.25	63.25	0.05	Temporary	Gravel	New	YES	126		
1	B	AR-XG-N-63.31	63.30	0.53	Temporary	Gravel	New	YES	213		
1	B	AR-HT-N-63.84	63.83	2.93	Temporary	Gravel	New	YES	555		
1	B	MS-PSY-E-66.76	66.76	0.53	Temporary	Gravel	Existing	NO	1,373		
1	B	TL-HT-N-67.3	67.29	0.79	<Null>	<Null>	<Null>	YES	4,044		
1	B	AR-XG-N-68.07	68.08	0.03	Temporary	Gravel	New	NO	280		
1	B	AR-XG-N-68.12	68.11	3.30	Temporary	Gravel	New	YES	114		
1	B	AR-N-71.42	71.41	1.20	Temporary	Gravel	New	YES	1,033		
1	B	WS-N-72.63	72.61	0.02	Temporary	Gravel	New	NO	2,640		
1	B	AR-HT-N-72.63	72.63	1.99	Temporary	Gravel	New	YES	132		
1	B	AR-N-74.62	74.62	1.20	Temporary	Gravel	New	YES	458		
1	B	AR-MLBV-CS-N-75.82	75.82	0.29	Permanent	Gravel	New	YES	270		
1	B	MS-N-76.12	76.11	0.00	Temporary	Gravel	New	NO	1,264		
1	B	MS-E-76.12	76.11	0.00	Temporary	Gravel	Existing	NO	2,857		
1	B	AR-MLBV-CS-N-76.12	76.11	1.99	Permanent	Gravel	New	YES	277		
1	B	WS-E-78.11	78.10	0.00	Temporary	Gravel	Existing	NO	630		
1	B	AR-N-78.11	78.10	2.61	Temporary	Gravel	New	YES	441		
1	B	AR-N-80.71	80.71	2.30	Temporary	Gravel	New	YES	472		
1	B	AR-HT-N-83.02	83.01	2.19	Temporary	Gravel	New	YES	669		
1	B	AR-N-85.21	85.20	0.50	Temporary	Gravel	New	YES	2,066		
1	B	AR-GA-N-85.7	85.70	0.00	Temporary	Gravel	New	YES	2,437		
1	B	CAMP-E-85.7	85.70	0.00	Temporary	Gravel	Existing	NO	393		
1	B	WS-E-85.7	85.70	0.05	Temporary	Gravel	Existing	NO	1,581		
1	B	PSY-E-85.7	85.75	3.05	Temporary	Gravel	Existing	NO	315		
1	B	AR-N-88.8	88.80	1.96	Temporary	Gravel	New	YES	523		
1	B	AR-N-90.77	90.76	3.55	Temporary	Gravel	New	YES	747		
1	B	AR-MLBV-HT-N-94.32	94.31	1.70	Temporary	Gravel	New	YES	838		
1	B	MS-E-96.02	96.01	0.72	Temporary	Gravel	Existing	NO	595		
1	B	PSY-N-96.74	96.73	0.17	Temporary	Gravel	New	NO	89		

Spread	Section	Feature Name	Milepost	Miles to Next AR	Road Type	Material	Status	On Centerline	Road Length (feet)	No. AR per Section	Average AR Spacing
1	B	PSY-N-96.9	96.90	1.36	Temporary	Gravel	New	NO	63		
1	B	MS-N-98.27	98.26	11.38	Temporary	Gravel	New	NO	367		
1	B	AR-N-109.65	109.64	0.63	Temporary	Gravel	New	YES	3,169		
1	B	MS-N-110.28	110.27	1.68	Temporary	Gravel	New	NO	277		
1	B	AR-MLBV-N-111.96	111.95	2.23	<Null>	<Null>	<Null>	YES	2,461		
1	B	MS-PSY-E-114.73	114.18	0.51	Temporary	Gravel	Existing	NO	6,569		
1	B	AR-HT-E-114.73	114.69	0.03	Temporary	Gravel	Existing	NO	1,922		
1	**B**	**AR-HT-N-114.73**	**114.72**	**2.96**	**Temporary**	**Gravel**	**New**	**YES**	**336**	**38**	**1.5**
1	C	AR-HT-N-117.69	117.68	0.58	Temporary	Gravel	New	YES	533		
1	C	ALT-MS-118.26	118.26	0.97	Temporary	Gravel	New	NO	337		
1	C	ALT-MS-119.27	119.23	0.03	Temporary	Gravel	New	NO	315		
1	C	AR-MS-E-119.27	119.26	1.88	Temporary	Gravel	Existing	YES	865		
1	C	AR-HT-N-121.15	121.14	0.68	Temporary	Gravel	New	YES	379		
1	C	ALT-MS-121.82	121.82	1.03	Temporary	Gravel	New	NO	265		
1	C	AR-XG-N-122.86	122.85	0.18	Temporary	Gravel	New	YES	337		
1	C	AR-XG-MS-I-123.04	123.03	1.52	Temporary	Gravel	Improve	YES	2,955		
1	C	AR-XG-HT-N-124.56	124.55	3.28	Temporary	Gravel	New	YES	166		
1	C	AR-N-127.83	127.83	1.67	Temporary	Gravel	New	YES	287		
1	C	PSY-N-129.55	129.50	0.05	Temporary	Gravel	New	NO	109		
1	C	AR-MS-MLBV-PSY-E-129	129.55	6.76	Temporary	Gravel	Existing	YES	10,742		
1	C	AR-XG-HT-N-136.32	136.31	0.04	Temporary	Gravel	New	YES	274		
1	C	AR-XG-HT-I-136.35	136.35	0.12	Temporary	Gravel	Improve	YES	1,429		
1	C	AR-XG-N-136.48	136.47	0.07	Temporary	Gravel	New	YES	262		
1	C	AR-XG-N-136.55	136.54	0.06	Temporary	Gravel	New	YES	325		
1	C	MS-N-136.35	136.60	2.05	Temporary	Gravel	New	NO	4,230		
1	C	AR-N-138.66	138.65	2.59	Temporary	Gravel	New	YES	461		
1	C	AR-MS-HT-CAMP-PSY-E	141.24	1.59	Temporary	Gravel	Existing	YES	17,922		
1	C	AR-N-142.84	142.83	0.98	Temporary	Gravel	New	YES	198		
1	C	AR-XG-HT-N-143.82	143.81	0.07	Temporary	Gravel	New	YES	347		
1	C	AR-XG-N-143.89	143.88	1.09	Temporary	Gravel	New	YES	134		
1	C	AR-GA-E-144.98	144.97	0.38	Temporary	Gravel	Existing	YES	203		
1	C	AR-GA-HT-N-145.36	145.35	1.67	Temporary	Gravel	New	YES	446		

Spread	Section	Feature Name	Milepost	Miles to Next AR	Road Type	Material	Status	On Centerline	Road Length (feet)	No. AR per Section	Average AR Spacing
1	C	AR-N-147.03	147.02	1.49	Permanent	Gravel	New	YES	814		
1	C	AR-MLBV-CS-N-148.51	148.51	0.24	Temporary	Gravel	New	YES	233		
1	C	MS-E-148.76	148.75	0.05	Temporary	Gravel	Existing	YES	615		
1	C	AR-GA-N-148.81	148.80	0.22	Temporary	Gravel	New	YES	187		
1	C	WD-E-149	149.02	2.01	Temporary	Gravel	Existing	YES	589		
1	C	AR-GA-HT-N-151.04	151.03	0.17	Temporary	Gravel	New	YES	226		
1	C	AR-GA-N-151.21	151.20	0.03	Temporary	Gravel	New	YES	234		
1	C	MS-N-151.21	151.23	1.72	Temporary	Gravel	New	NO	843		
1	C	AR-I-152.96	152.95	3.22	Temporary	Gravel	Improve	YES	191		
1	C	AR-E-156.18	156.17	0.00	Temporary	Gravel	Existing	YES	344		
1	C	AR-MS-E-156.18	156.17	0.86	Temporary	Gravel	Existing	YES	183		
1	C	AR-GA-N-157.04	157.03	1.71	Temporary	Gravel	New	YES	161		
1	C	AR-GA-HT-N-158.75	158.74	1.56	Temporary	Gravel	New	YES	164		
1	C	AR-N-160.31	160.30	0.00	Temporary	Gravel	New	YES	170		
1	C	MS-N-160.31	160.30	2.57	Temporary	Gravel	New	YES	624		
1	C	AR-MS-MLBV-E-162.88	162.87	0.01	Temporary	Gravel	Existing	YES	2,346		
1	C	MS-E-162.88	162.88	2.96	Temporary	Gravel	Existing	NO	428		
1	C	PSY-E-165.85	165.84	0.22	Temporary	Gravel	Existing	NO	3,204		
1	C	AR-PSY-N-166.07	166.06	0.50	Temporary	Gravel	New	YES	1,141	**43**	**1.2**
1	D	AR-N-166.57	166.56	0.01	Temporary	Gravel	New	YES	261		
1	D	AR-E-166.57	166.57	1.98	Temporary	Gravel	Existing	NO	618		
1	D	AR-XG-N-168.56	168.55	0.15	Temporary	Gravel	New	YES	514	**3**	**0.6**
1	D	AR-XG-HT-N-168.71	168.70	0.69	Temporary	Gravel	New	YES	383		
1	E	AR-E-169.4	169.39	0.52	Temporary	Gravel	Existing	YES	384		
1	E	AR-N-169.92	169.91	1.84	Temporary	Gravel	New	YES	83	**3**	**0.4**
1	F	AR-XG-HT-N-171.75	171.75	0.15	Temporary	Gravel	Existing	YES	583		
1	F	AR-XG-HT-E-171.91	171.90	0.05	Temporary	Gravel	Existing	YES	353		
1	F	AR-GA-N-171.96	171.95	2.72	Temporary	Gravel	New	YES	101		
1	F	MS-E-174.74	174.67	0.01	Temporary	Gravel	Existing	NO	768		
1	F	MS-N-174.74	174.68	0.03	Temporary	Gravel	New	NO	1,520		
1	F	PSY-E-174.74	174.71	0.02	Temporary	Gravel	Existing	NO	377		
1	F	AR-PSY-N-174.74	174.73	0.49	Temporary	Gravel	New	YES	225		

Spread	Section	Feature Name	Milepost	Miles to Next AR	Road Type	Material	Status	On Centerline	Road Length (feet)	No. AR per Section	Average AR Spacing
1	F	AR-I-175.23	175.22	1.66	Temporary	Gravel	New	YES	236		
1	F	AR-GA-MLBV-E-176.89	176.88	1.89	Temporary	Gravel	Existing	YES	322	**9**	**0.7**
1	G	AR-GA-N-178.78	178.77	0.89	Temporary	Gravel	New	YES	155		
1	G	AR-GA-N-179.67	179.66	0.65	Temporary	Gravel	New	YES	223		
1	G	AR-MS-N-180.32	180.31	1.26	Temporary	Gravel	New	YES	686		
1	G	AR-GA-N-181.58	181.57	0.37	Temporary	Gravel	New	YES	936		
1	**G**	**AR-XG-GA-N-181.94**	**181.94**	**0.06**	**Temporary**	**Gravel**	**New**	**YES**	**1,867**		
1	G	AR-XG-GA-N-182.0	182.00	0.08	Temporary	Gravel	New	YES	182		
1	G	AR-XG-N-182.09	182.08	1.46	Temporary	Gravel	New	YES	178	**7**	**0.6**
1	H	AR-XG-N-183.55	183.54	0.94	Temporary	Gravel	New	YES	341		
1	H	AR-GA-N-184.49	184.48	0.09	Temporary	Gravel	New	YES	355		
1	H	AR-GA-N-184.58	184.57	1.24	Temporary	Gravel	New	YES	351		
1	H	AR-N-185.82	185.81	1.70	Temporary	Gravel	New	YES	358		
1	H	AR-GA-N-187.52	187.51	0.20	Temporary	Gravel	New	YES	111		
1	H	AR-GA-N-187.72	187.71	0.22	Temporary	Gravel	New	YES	130		
1	H	AR-N-187.94	187.93	0.56	Temporary	Gravel	New	YES	134		
1	H	AR-N-188.5	188.49	2.54	Temporary	Gravel	New	YES	164		
1	H	MS-PSY-N-191.04	191.03	0.00	Temporary	Gravel	New	NO	190		
1	H	AR-MS-E-191.04	191.03	2.28	Temporary	Gravel	Existing	YES	271		
1	H	AR-XG-N-193.35	193.31	0.03	Temporary	Gravel	New	NO	125		
1	H	AR-XG-N-193.35	193.34	0.00	Temporary	Gravel	New	YES	125		
1	H	AR-XG-N-193.35	193.34	0.75	Temporary	Gravel	New	YES	125		
1	H	AR-MS-MLBV-N-194.1	194.09	0.00	Temporary	Gravel	New	YES	1,288		
1	H	MS-N-194.1	194.09	1.16	Temporary	Gravel	New	YES	614		
1	H	AR-I-195.26	195.25	1.20	Temporary	Gravel	Improve	YES	438		
1	H	AR-XG-N-196.46	196.45	0.20	Temporary	Gravel	New	YES	1,045		
1	H	AR-XG-N-196.66	196.65	1.08	Temporary	Gravel	New	YES	192		
1	H	AR-HT-N-197.74	197.73	2.05	Temporary	Gravel	New	YES	330		
1	H	AR-N-199.79	199.78	1.97	Temporary	Gravel	New	YES	253		
1	H	AR-GA-N-201.76	201.75	0.17	Temporary	Gravel	New	YES	264		
1	H	AR-GA-N-201.93	201.92	2.80	Temporary	Gravel	New	YES	277		
1	H	AR-GA-N-204.73	204.72	0.13	Temporary	Gravel	New	YES	859		

Spread	Section	Feature Name	Milepost	Miles to Next AR	Road Type	Material	Status	On Centerline	Road Length (feet)	No. AR per Section	Average AR Spacing
1	H	AR-GA-PSY-N-204.86	204.85	1.39	Temporary	Gravel	New	YES	853		
1	H	CAMP-N-206.5	206.24	0.25	Temporary	Gravel	New	NO	3,417		
1	H	AR-XG-N-206.5	206.49	0.09	Temporary	Gravel	New	YES	160		
1	H	AR-XG-N-206.59	206.58	0.00	Temporary	Gravel	New	YES	303		
1	H	CAMP-E-206.5	206.58	1.45	Temporary	Gravel	Existing	NO	635		
1	H	AR-N-208.05	208.03	0.56	Temporary	Gravel	New	YES	245		
1	H	SBY-N-208.6	208.59	0.00	Temporary	Gravel	New	NO	96		
1	H	AR-GA-HT-E-208.6	208.59	0.23	Temporary	Gravel	Existing	YES	141		
1	**H**	**AR-GA-N-208.83**	**208.82**	**0.58**	**Temporary**	**Gravel**	**New**	**YES**	**123**	**32**	**0.8**
2	A	AR-MLBV-N-209.41	209.40	0.78	Temporary	Gravel	New	YES	106		
2	A	AR-XG-N-210.19	210.18	0.08	Temporary	Gravel	New	YES	357		
2	A	AR-XG-N-210.27	210.26	0.69	Temporary	Gravel	New	YES	138		
2	A	AR-GA-N-210.96	210.95	0.78	Temporary	Gravel	New	YES	125		
2	A	AR-GA-N-211.74	211.73	1.12	Temporary	Gravel	New	YES	995		
2	A	AR-N-212.86	212.85	0.70	Temporary	Gravel	New	YES	394		
2	A	AR-N-213.56	213.55	1.80	Temporary	Gravel	New	YES	627		
2	A	AR-N-215.36	215.35	1.98	Temporary	Gravel	New	YES	856		
2	A	AR-N-217.34	217.33	1.02	Temporary	Gravel	New	YES	530		
2	A	AR-N-218.36	218.35	0.44	Temporary	Gravel	New	YES	217		
2	A	AR-GA-MS-PSY-E-218.8	218.79	0.41	Temporary	Gravel	Existing	YES	1,053		
2	A	AR-GA-N-219.21	219.20	0.63	Temporary	Gravel	New	YES	226		
2	A	AR-GA-N-219.84	219.83	0.09	Temporary	Gravel	New	YES	924		
2	A	AR-GA-N-219.93	219.92	1.44	Temporary	Gravel	New	YES	986		
2	A	AR-N-221.37	221.36	2.13	Temporary	Gravel	New	YES	2,826		
2	A	AR-MLBV-N-223.5	223.49	4.54	Temporary	Gravel	New	YES	1,092		
2	A	AR-XG-N-228.04	228.03	0.12	Temporary	Gravel	New	YES	420		
2	A	AR-XG-N-228.17	228.15	0.70	Temporary	Gravel	New	YES	310		
2	A	AR-E-228.86	228.85	0.54	Temporary	Gravel	Existing	YES	138		
2	B	MS-E-229.4	229.39	0.09	Temporary	Gravel	Existing	NO	72		
2	B	AR-E-229.5	229.48	1.49	Temporary	Gravel	Existing	YES	387		
2	B	AR-XG-N-230.99	230.97	0.16	Temporary	Gravel	New	YES	663		
2	B	AR-XG-N-231.14	231.13	2.20	Temporary	Gravel	New	YES	188		

Spread	Section	Feature Name	Milepost	Miles to Next AR	Road Type	Material	Status	On Centerline	Road Length (feet)	No. AR per Section	Average AR Spacing
2	B	AR-N-233.34	233.33	1.45	Temporary	Gravel	New	YES	198		
2	B	MS-N-234.95	234.78	0.15	Temporary	Gravel	New	NO	3,655		
2	B	AR-N-234.95	234.93	1.15	Temporary	Gravel	New	YES	132		
2	B	AR-MS-HT-E-236.09	236.08	0.60	Temporary	Gravel	Existing	YES	7,832		
2	B	AR-E-236.69	236.68	0.01	Temporary	Gravel	Existing	YES	158		
2	B	WD-E-237.1	236.69	1.68	Temporary	Gravel	Existing	NO	259		
2	B	AR-N-238.39	238.37	1.62	Temporary	Gravel	New	YES	140		
2	B	AR-MLBV-CS-N-240	239.99	0.21	Permanent	Gravel	New	YES	1,245		
2	B	AR-CS-N-240.21	240.20	0.62	Permanent	Gravel	New	NO	180		
2	B	AR-GA-N-240.84	240.82	0.23	Temporary	Gravel	New	YES	1,070		
2	B	CAMP-PSY-E-241.07	241.05	0.00	Temporary	Gravel	Existing	NO	1,702		
2	B	CAMP-PSY-I-241.07	241.05	0.12	Temporary	Gravel	Improve	NO	1,548		
2	C	AR-PSY-I-241.18	241.17	2.45	Temporary	Gravel	Improve	YES	300		
2	C	MS-E-243.64	243.62	0.28	Temporary	Gravel	Existing	NO	674		
2	C	AR-E-243.92	243.90	2.16	Temporary	Gravel	Existing	YES	252		
2	C	AR-GA-N-246.08	246.06	0.73	Temporary	Gravel	New	YES	1,707		
2	C	AR-GA-N-246.8	246.79	1.43	Temporary	Gravel	New	YES	572		
2	C	AR-N-248.23	248.22	1.26	Temporary	Gravel	New	YES	303		
2	C	AR-N-249.49	249.48	2.32	Temporary	Gravel	New	YES	146		
2	D	AR-N-251.82	251.80	0.45	Temporary	Gravel	New	YES	959		
2	D	AR-XG-N-252.26	252.25	0.04	Temporary	Gravel	New	YES	181		
2	D	AR-XG-N-252.31	252.29	3.05	Temporary	Gravel	New	YES	214		
2	D	PSY-N-255.43	255.34	0.08	Temporary	Gravel	New	NO	622		
2	D	AR-PSY-E-255.43	255.42	1.96	Temporary	Gravel	Existing	YES	1,797		
2	D	AR-MLBV-E-257.4	257.38	0.40	Temporary	Gravel	Existing	YES	394		
2	D	AR-XG-E-257.79	257.78	0.00	Temporary	Gravel	Existing	YES	601		
2	D	AR-XG-N-257.79	257.78	1.31	Temporary	Gravel	New	YES	1,794		
2	D	AR-N-259.1	259.09	0.70	Temporary	Gravel	New	YES	443		
2	D	AR-XG-N-259.8	259.79	0.16	Temporary	Gravel	New	YES	801		
2	D	AR-XG-N-259.96	259.95	0.67	Temporary	Gravel	New	YES	268		
2	D	AR-GA-N-260.63	260.62	0.18	Temporary	Gravel	New	YES	618		
2	D	AR-GA-MS-HT-N-260.81	260.80	1.90	Temporary	Gravel	New	YES	926		

Spread	Section	Feature Name	Milepost	Miles to Next AR	Road Type	Material	Status	On Centerline	Road Length (feet)	No. AR per Section	Average AR Spacing
2	D	AR-E-262.71	262.70	1.56	Temporary	Gravel	Existing	YES	349		
2	D	AR-I-264.27	264.26	3.29	Temporary	Gravel	Improve	YES	431		
2	D	AR-I-267.56	267.55	1.99	Temporary	Gravel	New	YES	706		
2	D	AR-N-269.56	269.54	1.70	Temporary	Gravel	New	YES	177		
2	D	AR-MLBV-N-271.26	271.24	0.67	Temporary	Gravel	New	YES	628		
2	D	MS-E-271.93	271.91	0.36	Temporary	Gravel	Existing	NO	3,853		
2	D	AR-GA-N-272.29	272.27	0.12	Temporary	Gravel	New	YES	1,717		
2	D	AR-GA-E-272.65	272.39	0.25	Temporary	Gravel	Existing	NO	235		
2	D	AR-GA-N-272.65	272.64	3.73	Temporary	Gravel	New	YES	2,166		
2	D	AR-N-276.39	276.37	1.72	Temporary	Gravel	New	YES	4,840		
2	D	AR-N-278.11	278.09	0.82	Temporary	Gravel	New	YES	6,010		
2	D	CAMP-PSY-E-278.93	278.91	0.19	Temporary	Gravel	Existing	NO	120		
2	D	CAMP-PSY-E-279.12	279.10	0.02	Temporary	Gravel	Existing	NO	1,713		
2	D	AR-E-278.11	279.12	2.17	Temporary	Gravel	Existing	NO	4,581		
2	D	AR-HT-E-281.44	281.29	0.15	Temporary	Gravel	New	NO	1,365		
2	D	AR-HT-N-281.44	281.44	0.15	Temporary	Gravel	New	YES	2,016		
2	E	ALT-MS-281.61	281.59	0.09	Temporary	Gravel	New	YES	2,143		
2	E	ALT-MS-281.61	281.68	1.99	Temporary	Gravel	New	NO	2,143		
2	E	ALT-MS-283.69	283.67	0.04	Temporary	Gravel	New	YES	386		
2	E	AR-HT-N-283.72	283.71	0.11	Temporary	Gravel	New	YES	915		
2	E	AR-HT-I-283.72	283.82	1.69	Temporary	Gravel	Improve	NO	5,022		
2	E	AR-MLBV-E-285.61	285.51	0.08	Temporary	Gravel	Existing	NO	1,043		
2	E	AR-MLBV-HT-N-285.61	285.59	1.74	Temporary	Gravel	New	YES	956		
2	E	AR-GA-N-287.34	287.33	0.24	Temporary	Gravel	New	YES	933		
2	E	AR-GA-I-287.34	287.57	0.75	Temporary	Gravel	Improve	NO	4,778		
2	E	AR-GA-HT-I-288.38	288.32	0.04	Temporary	Gravel	Improve	NO	1,364		
2	E	AR-GA-HT-N-288.38	288.36	0.64	Temporary	Gravel	New	YES	590		
2	E	AR-GA-N-289.01	289.00	1.18	Temporary	Gravel	New	YES	1,405		
2	E	AR-GA-N-290.2	290.18	0.13	Temporary	Gravel	New	YES	431		
2	E	AR-GA-E-290.2	290.31	0.02	Temporary	Gravel	Existing	NO	1,338		
2	E	MS-N-290.2	290.33	2.01	Temporary	Gravel	New	NO	134		
2	E	AR-E-292.37	292.34	0.02	Temporary	Gravel	Existing	NO	524		

Spread	Section	Feature Name	Milepost	Miles to Next AR	Road Type	Material	Status	On Centerline	Road Length (feet)	No. AR per Section	Average AR Spacing
2	E	AR-N-292.37	292.36	4.16	Temporary	Gravel	New	YES	453		
2	E	AR-GA-HT-PSY-N-296.54	296.52	0.12	Temporary	Gravel	New	YES	861		
2	E	AR-GA-HT-PSY-E-296.54	296.64	1.09	Temporary	Gravel	Existing	NO	5,777		
2	E	AR-GA-I-297.93	297.73	0.19	Temporary	Gravel	Improve	NO	11,814		
2	E	AR-GA-N-297.93	297.92	0.85	Temporary	Gravel	New	YES	775		
2	E	MS-N-298.79	298.77	0.63	Temporary	Gravel	New	NO	103		
2	E	AR-GA-HT-E-299.68	299.40	0.27	Temporary	Gravel	Existing	NO	9,681		
2	E	AR-GA-HT-N-299.68	299.67	0.89	Temporary	Gravel	New	YES	357		
2	E	AR-GA-MS-I-300.74	300.56	0.17	Temporary	Gravel	Improve	NO	6,299		
2	E	AR-GA-MS-N-300.74	300.73	2.14	Temporary	Gravel	New	YES	1,065		
2	E	AR-HT-N-302.88	302.87	2.16	Temporary	Gravel	New	YES	719		
2	E	AR-GA-HT-N-305.04	305.03	0.41	Temporary	Gravel	New	YES	1,023		
2	E	AR-GA-CAMP-E-305.46	305.44	0.13	Temporary	Gravel	Existing	NO	1,019		
2	E	AR-GA-CAMP-N-305.58	305.57	0.27	Temporary	Gravel	New	YES	233		
2	E	MS-PSY-I-305.86	305.84	1.03	Temporary	Gravel	Improve	NO	784		
2	E	AR-GA-I-306.89	306.87	0.41	Temporary	Gravel	Improve	YES	784		
2	E	AR-GA-N-307.29	307.28	2.04	Temporary	Gravel	New	YES	373		
2	E	AR-HT-N-309.34	309.32	1.32	Temporary	Gravel	New	YES	200		
2	E	AR-XG-HT-N-310.66	310.64	0.09	Temporary	Gravel	New	YES	293		
2	E	AR-XG-N-310.74	310.73	1.88	Temporary	Gravel	New	YES	610		
2	E	ALT-MS-312.63	312.61	2.95	Temporary	Gravel	New	YES	925		
2	F	AR-N-315.57	315.56	2.08	Temporary	Gravel	New	YES	331		
2	F	AR-MLBV-N-317.65	317.64	1.15	Temporary	Gravel	New	YES	234		
2	F	AR-GA-HT-N-318.81	318.79	0.27	Temporary	Gravel	New	YES	175		
2	F	AR-GA-N-319.08	319.06	2.87	Temporary	Gravel	New	YES	467		
2	F	AR-GA-N-321.95	321.93	0.54	Temporary	Gravel	New	YES	335		
2	F	AR-GA-N-322.48	322.47	2.21	Temporary	Gravel	New	YES	570		
2	F	AR-N-324.69	324.68	0.01	Temporary	Gravel	New	YES	288		
2	F	MS-PSY-E-324.69	324.69	0.94	Temporary	Gravel	Existing	NO	3,800		
2	F	AR-HT-N-325.64	325.63	1.03	Temporary	Gravel	New	YES	479		
2	F	AR-E-326.68	326.66	1.76	Temporary	Gravel	Existing	YES	354		
2	G	AR-HT-N-328.43	328.42	0.72	Temporary	Gravel	New	YES	245		

Spread	Section	Feature Name	Milepost	Miles to Next AR	Road Type	Material	Status	On Centerline	Road Length (feet)	No. AR per Section	Average AR Spacing
2	G	AR-HT-N-329.16	329.14	1.84	Temporary	Gravel	New	YES	372		
2	G	AR-N-331	330.98	1.64	Temporary	Gravel	New	YES	193		
2	G	AR-MLBV-CS-HT-N-332.6	332.62	1.49	Permanent	Gravel	New	YES	207		
2	G	AR-GA-N-334.12	334.11	0.06	Temporary	Gravel	New	YES	137		
2	G	AR-GA-N-334.18	334.17	0.47	Temporary	Gravel	New	YES	140		
2	G	AR-GA-N-334.66	334.64	2.35	Temporary	Gravel	New	YES	525		
2	G	MS-PSY-E-337.17	336.99	0.12	Temporary	Gravel	Existing	NO	2,365		
2	G	PSY-N-337.17	337.11	0.04	Temporary	Gravel	New	NO	934		
2	G	AR-N-337.17	337.15	0.86	Temporary	Gravel	New	YES	1,571		
2	G	AR-N-338.03	338.01	1.37	Temporary	Gravel	New	YES	440		
2	G	AR-MS-N-339.39	339.38	0.45	Temporary	Gravel	New	YES	346		
2	G	AR-HT-N-339.84	339.83	1.05	Temporary	Gravel	New	YES	530		
2	H	AR-N-340.9	340.88	0.70	Temporary	Gravel	New	YES	260		
2	H	AR-XG-N-341.6	341.58	0.10	Temporary	Gravel	New	YES	427		
2	H	AR-XG-N-341.7	341.68	0.11	Temporary	Gravel	New	YES	126		
2	H	AR-GA-N-341.80	341.79	0.02	Temporary	Gravel	New	YES	215		
2	H	AR-HT-GA-N-341.82	341.81	0.65	Temporary	Gravel	New	YES	207		
2	H	AR-XG-HT-N-342.48	342.46	0.33	Temporary	Gravel	New	YES	1,570		
2	H	AR-XG-GA-E-343.03	342.79	0.22	Temporary	Gravel	Existing	NO	2,240		
2	H	AR-XG-GA-N-343.03	343.01	0.42	Temporary	Gravel	New	YES	454		
2	H	AR-HT-GA-N-343.45	343.43	0.03	Temporary	Gravel	New	YES	327		
2	H	AR-HT-GA-E-343.45	343.46	0.77	Temporary	Gravel	Existing	NO	541		
2	H	SF-N-344.25	344.23	1.18	Temporary	Gravel	New	YES	10,769		
2	H	AR-GA-N-345.43	345.41	0.00	Temporary	Gravel	New	YES	323		
2	H	SF-N-344.25	345.41	1.33	Temporary	Gravel	New	YES	10,769		
2	H	AR-HT-N-346.76	346.74	0.97	Temporary	Gravel	New	YES	1,359		
2	H	AR-XG-N-347.73	347.71	0.11	Temporary	Gravel	New	YES	214		
2	H	AR-XG-N-347.83	347.82	0.64	Temporary	Gravel	New	YES	516		
2	I	AR-MLBV-E-348.48	348.46	0.01	Temporary	Gravel	Existing	YES	630		
2	I	MS-E-348.48	348.47	2.57	Temporary	Gravel	Existing	NO	4,180		
2	I	AR-XG-E-351.06	351.04	0.75	Temporary	Gravel	Existing	YES	1,068		
2	I	AR-XG-N-351.81	351.79	0.69	Temporary	Gravel	New	YES	187		

Spread	Section	Feature Name	Milepost	Miles to Next AR	Road Type	Material	Status	On Centerline	Road Length (feet)	No. AR per Section	Average AR Spacing
2	I	AR-XG-N-352.49	352.48	1.04	Temporary	Gravel	New	YES	1,849		
2	I	AR-PSY-N-353.55	353.52	0.26	Temporary	Gravel	New	YES	1,384		
2	I	CAMP-PSY-N-353.43	353.78	2.00	Temporary	Gravel	New	NO	85		
2	I	AR-HT-N-355.79	355.78	1.66	Temporary	Gravel	New	YES	618		
2	J	AR-XG-PSY-E-357.45	357.44	0.81	Temporary	Gravel	Existing	YES	830		
2	J	AR-XG-N-358.26	358.25	0.02	Temporary	Gravel	New	YES	185		
2	J	AR-XG-E-358.29	358.27	0.02	Temporary	Gravel	Existing	YES	306		
2	J	AR-XG-N-358.31	358.29	0.66	Temporary	Gravel	New	YES	180		
2	J	AR-E-358.96	358.95	4.53	Temporary	Gravel	Existing	YES	124		
2	J	AR-MLBV-HT-E-363.5	363.48	0.00	Temporary	Gravel	Existing	YES	661		
2	J	WD-E-364	363.48	1.40	Temporary	Gravel	Existing	YES	1,106		
2	J	AR-MS-E-364.88	364.88	0.11	Temporary	Gravel	Existing	NO	3,004		
2	J	MS-N-365.01	364.99	3.24	Temporary	Gravel	New	YES	2,167		
2	J	AR-E-368.24	368.23	1.89	Temporary	Gravel	Existing	YES	780		
2	J	AR-XG-N-370.14	370.12	0.09	Temporary	Gravel	New	YES	654		
2	J	PSY-E-370.22	370.21	0.07	Temporary	Gravel	Existing	NO	1,209		
2	J	AR-XG-HT-N-370.3	370.28	0.33	Temporary	Gravel	New	YES	590		
2	J	AR-XG-N-370.63	370.61	1.25	Temporary	Gravel	New	YES	513		
2	J	AR-MS-N-371.88	371.86	0.01	Temporary	Gravel	New	YES	198		
2	J	AR-MS-E-371.88	371.87	1.85	Temporary	Gravel	Existing	NO	3,806		
2	J	AR-GA-E-373.74	373.72	2.73	Temporary	Gravel	Existing	YES	1,026		
2	J	AR-GA-E-376.47	376.45	1.35	Temporary	Gravel	Existing	YES	109		
2	K	AR-MLBV-PSY-E-377.82	377.80	0.12	Temporary	Gravel	Existing	YES	1,085		
2	K	MS-E-377.82	377.92	1.60	Temporary	Gravel	Existing	NO	3,687		
2	K	AR-E-379.54	379.52	0.00	Temporary	Gravel	Existing	YES	119		
2	K	WD-E-380.1	379.52	0.98	Temporary	Gravel	Existing	NO	55		
2	K	AR-HT-I-380.52	380.50	1.68	Temporary	Gravel	Improve	YES	224		
2	K	MS-N-382.34	382.18	0.14	Temporary	Gravel	New	NO	45		
2	K	AR-MS-HT-E-382.34	382.32	1.86	Temporary	Gravel	Existing	YES	6,940		
2	L	AR-N-384.2	384.18	0.79	Temporary	Gravel	New	YES	1,014		
2	L	SF-N-384.99	384.97	0.43	Temporary	Gravel	New	YES	2,936		
2	L	SF-N-384.99	385.40	0.00	Temporary	Gravel	New	YES	2,936		

Spread	Section	Feature Name	Milepost	Miles to Next AR	Road Type	Material	Status	On Centerline	Road Length (feet)	No. AR per Section	Average AR Spacing
2	L	SF-N-385.41	385.40	0.23	Temporary	Gravel	New	YES	1,639		
2	L	SF-N-385.41	385.63	8.34	Temporary	Gravel	New	YES	1,639		
2	L	AR-GA-MS-MLBV-PSY-I-	393.97	0.42	Temporary	Gravel	Improve	YES	10,707		
2	L	MS-N-393.99	394.39	0.95	Temporary	Gravel	New	NO	323		
2	L	AR-GA-E-395.36	395.34	2.79	Temporary	Gravel	Existing	YES	3,347		
2	L	AR-XG-N-398.15	398.13	0.09	Temporary	Gravel	New	YES	231		
2	L	AR-XG-HT-N-398.24	398.22	2.41	Temporary	Gravel	New	YES	472		
2	L	AR-XG-HT-N-400.65	400.63	0.45	Temporary	Gravel	New	YES	653		
3	A	CAMP-E-401.2	401.08	0.07	Temporary	Gravel	Existing	NO	225		
3	A	AR-E-401.2	401.15	0.03	Temporary	Gravel	Existing	NO	1,430		
3	A	AR-N-401.2	401.18	0.80	Temporary	Gravel	New	YES	1,117		
3	A	MS-N-402	401.98	2.92	Temporary	Gravel	New	YES	1,284		
3	A	AR-MLBV-HT-PSY-I-409.	404.90	0.92	Temporary	Gravel	Improve	NO	39,803		
3	A	MS-N-405.84	405.82	2.28	Temporary	Gravel	New	YES	1,812		
3	A	SF-N-408.12	408.10	1.69	Temporary	Gravel	New	YES	17,797		
3	B	AR-MLBV-HT-PSY-N-409	409.79	1.75	Temporary	Gravel	New	YES	26,926		
3	B	SF-N-408.12	411.54	1.14	Temporary	Gravel	New	YES	17,797		
3	B	ALT-MS-412.7	412.68	1.33	Temporary	Gravel	New	NO	410		
3	B	MS-N-414.03	414.01	1.48	Temporary	Gravel	New	YES	7,319		
3	B	AR-TL-MLBV-CS-HT-N-4	415.49	24.11	Permanent	Gravel	New	NO	61,809		
3	C	AR-MS-N-439.62	439.60	0.94	Temporary	Gravel	New	YES	16,645		
3	C	MS-N-442.89	440.54	0.00	Temporary	Gravel	New	NO	228		
3	C	MS-N-442.89	440.54	0.42	Temporary	Gravel	New	NO	228		
3	C	ALT-MS-439.62	440.96	1.91	Temporary	Gravel	New	NO	786		
3	C	AR-MS-N-442.89	442.87	0.36	Permanent	Gravel	New	YES	69,747		
3	C	MS-N-442.89	443.23	0.21	Temporary	Gravel	New	NO	228		
3	C	AR-MS-E-442.89	443.44	2.26	Permanent	Gravel	Existing	NO	42,384		
3	C	MS-N-445.72	445.70	4.00	Temporary	Gravel	New	YES	77		
3	C	AR-MLBV-CS-MS-N-442.	449.70	5.95	Temporary	Gravel	New	YES	165		
3	C	AR-MLBV-CAMP-HT-PSY	455.65	2.94	Temporary	Gravel	New	YES	8,240		
3	C	AR-MLBV-CS-MS-E-442.	458.59	0.03	Temporary	Gravel	New	NO	21,935		
3	C	MS-N-458.64	458.62	0.67	Temporary	Gravel	New	NO	197		

Spread	Section	Feature Name	Milepost	Miles to Next AR	Road Type	Material	Status	On Centerline	Road Length (feet)	No. AR per Section	Average AR Spacing
3	C	MS-N-459.31	459.29	1.47	Temporary	Gravel	New	NO	94		
3	C	MS-N-460.78	460.76	3.58	Temporary	Gravel	New	NO	157		
3	C	AR-MS-E-464.37	464.34	0.13	Temporary	Gravel	Existing	YES	14,930		
3	C	AR-MS-N-464.37	464.47	1.93	Temporary	Gravel	New	NO	2,000		
3	C	ALT-MS-466.42	466.40	0.49	Temporary	Gravel	New	NO	170		
3	C	AR-MLBV-N-466.91	466.89	0.89	Temporary	Gravel	New	YES	3,859		
3	C	AR-MLBV-E-466.91	467.78	1.24	Temporary	Gravel	Existing	NO	2,082		
3	C	ALT-MS-469.05	469.02	1.17	Temporary	Gravel	New	NO	241		
3	C	AR-MS-N-470.21	470.19	0.18	Temporary	Gravel	New	YES	100		
3	C	ALT-MS-470.4	470.37	0.33	Temporary	Gravel	New	NO	276		
3	C	AR-XG-N-470.73	470.70	0.11	Temporary	Gravel	New	YES	457		
3	C	AR-XG-N-470.84	470.81	0.00	Temporary	Gravel	New	YES	157		
3	C	AR-XG-E-470.84	470.81	0.88	Temporary	Gravel	Existing	NO	99		
3	C	AR-SP-E-471.72	471.69	0.93	Temporary	Gravel	Existing	YES	1,159		
3	C	AR-GA-N-472.65	472.62	1.14	Temporary	Gravel	New	YES	129		
3	D	AR-GA-MS-PSY-I-473.78	473.76	9.70	Temporary	Gravel	Existing	YES	2,425		
3	E	MS-N-483.49	483.46	8.99	Temporary	Gravel	New	YES	653		
3	F	ALT-MS-492.47	492.45	3.59	Temporary	Gravel	New	NO	1,888		
3	F	SP-E-496.01	496.04	2.54	Temporary	Gravel	Existing	NO	4,392		
3	F	AR-MS-CAMP-N-498.59	498.58	0.00	Temporary	Gravel	New	YES	2,381		
3	F	AR-XG-N-498.59	498.58	0.02	Temporary	Gravel	New	YES	747		
3	F	CAMP-I-498.59	498.60	0.01	Temporary	Gravel	Improve	NO	1,191		
3	G	PSY-N-498.59	498.61	0.07	Temporary	Gravel	New	NO	344		
3	G	AR-XG-E-498.59	498.68	0.09	Temporary	Gravel	Existing	NO	188		
3	G	AR-XG-N-498.79	498.77	0.19	Temporary	Gravel	New	YES	867		
3	G	ALT-MS-498.98	498.96	0.32	Temporary	Gravel	New	NO	1,364		
3	G	CAMP-PSY-N-499.44	499.28	0.14	Temporary	Gravel	New	NO	3,715		
3	G	AR-N-499.44	499.42	0.53	Temporary	Gravel	New	YES	767		
3	G	ALT-MS-499.97	499.95	0.46	Temporary	Gravel	New	NO	104		
3	G	ALT-MS-500.42	500.41	2.26	Temporary	Gravel	New	NO	731		
3	G	ALT-MS-502.69	502.67	2.79	Temporary	Gravel	New	NO	116		
3	G	AR-MS-N-505.48	505.46	1.91	Temporary	Gravel	New	YES	898		

Spread	Section	Feature Name	Milepost	Miles to Next AR	Road Type	Material	Status	On Centerline	Road Length (feet)	No. AR per Section	Average AR Spacing
3	G	AR-HT-N-507.39	507.37	0.40	Temporary	Gravel	New	YES	1,507		
3	G	ALT-MS-507.79	507.77	1.71	Temporary	Gravel	New	NO	773		
3	G	AR-N-509.5	509.48	2.72	Temporary	Gravel	New	YES	1,354		
3	G	AR-N-512.22	512.20	0.81	Temporary	Gravel	New	YES	201		
3	G	AR-MS-E-513.03	513.01	1.67	Temporary	Gravel	Existing	YES	813		
3	G	AR-MS-E-514.7	514.68	1.57	Temporary	Gravel	Existing	YES	1,403		
3	G	AR-N-516.27	516.25	1.62	Temporary	Gravel	New	YES	1,846		
3	G	AR-MLBV-CS-HT-N-517.9	517.87	0.04	Permanent	Gravel	New	NO	1,592		
3	G	MS-N-517.9	517.91	0.61	Temporary	Gravel	New	NO	229		
3	G	ALT-MS-518.54	518.52	0.41	Temporary	Gravel	New	NO	147		
3	G	ALT-MS-518.95	518.93	0.59	Temporary	Gravel	New	NO	63		
3	G	AR-GA-I-519.54	519.52	0.27	Temporary	Gravel	Existing	YES	954		
3	G	AR-GA-MS-N-519.81	519.79	0.17	Temporary	Gravel	New	YES	649		
3	G	ALT-MS-519.98	519.96	0.84	Temporary	Gravel	New	NO	61		
3	G	AR-HT-N-520.82	520.80	0.02	Temporary	Gravel	New	YES	430		
3	G	AR-HT-E-520.82	520.82	0.88	Temporary	Gravel	Existing	NO	744		
3	H	AR-XG-N-521.71	521.70	0.02	Temporary	Gravel	New	YES	686		
3	H	ALT-MS-521.74	521.72	0.11	Temporary	Gravel	New	NO	329		
3	H	AR-XG-N-521.85	521.83	0.27	Temporary	Gravel	New	YES	519		
3	H	ALT-MS-522.12	522.10	1.03	Temporary	Gravel	New	NO	203		
3	H	AR-XG-N-523.15	523.13	0.09	Temporary	Gravel	New	YES	249		
3	H	AR-XG-N-523.24	523.22	2.30	Temporary	Gravel	New	YES	367		
3	H	AR-I-526.02	525.52	0.27	Temporary	Gravel	Improve	NO	5,845		
3	H	MS-N525.81	525.79	0.22	Temporary	Gravel	New	NO	1,624		
3	H	AR-HT-N-526.02	526.01	0.94	Temporary	Gravel	Existing	YES	2,956		
3	H	AR-CAMP-I-526.97	526.95	1.82	Temporary	Gravel	Existing	YES	3,612		
3	H	CAMP-PSY-E-528.79	528.77	0.07	Temporary	Gravel	Existing	NO	402		
3	H	CAMP-PSY-N-526.97	528.84	0.35	Temporary	Gravel	New	NO	248		
3	H	AR-N-529.2	529.19	0.61	Temporary	Gravel	New	YES	581		
3	H	ALT-MS-529.82	529.80	1.15	Temporary	Gravel	New	NO	111		
3	H	AR-GA-N-530.97	530.95	0.82	Temporary	Gravel	New	YES	262		
3	H	AR-GA-N-531.78	531.77	3.03	Temporary	Gravel	New	YES	590		

Spread	Section	Feature Name	Milepost	Miles to Next AR	Road Type	Material	Status	On Centerline	Road Length (feet)	No. AR per Section	Average AR Spacing
3	I	AR-MLBV-GA-N-535	534.80	1.35	Temporary	Gravel	New	NO	187		
3	J	AR-GA-N-536.36	536.15	0.11	Temporary	Gravel	New	YES	580		
3	J	AR-GA-N-536.47	536.26	0.69	Temporary	Gravel	New	YES	758		
3	J	SF-N-537.15	536.95	0.17	Temporary	Gravel	New	YES	1,529		
3	J	SF-N-537.15	537.12	0.68	Temporary	Gravel	New	YES	1,529		
3	J	SF-N-538.01	537.80	0.20	Temporary	Gravel	New	YES	2,432		
3	J	SF-N-538.01	538.00	3.94	Temporary	Gravel	New	YES	2,432		
3	K	SF-N-542.15	541.94	0.32	Temporary	Gravel	New	YES	5,819		
3	K	SF-N-542.15	542.26	0.19	Temporary	Gravel	New	YES	5,819		
3	K	SF-N-542.66	542.45	0.42	Temporary	Gravel	New	YES	1,778		
3	K	SF-N-543.08	542.87	0.26	Temporary	Gravel	New	YES	1,168		
3	L1	SF-N-543.08	543.13	3.34	Temporary	Gravel	New	YES	1,168		
3	L1	AR-N-546.68	546.47	1.41	Temporary	Gravel	New	YES	432		
3	L1	AR-MLBV-HT-N-548.09	547.88	3.28	Permanent	Gravel	New	YES	3,585		
3	L1	AR-PSY-N-551.37	551.16	0.02	Temporary	Gravel	New	NO	214		
3	L1	AR-PSY-N-551.39	551.18	0.18	Temporary	Gravel	New	YES	336		
3	L1	AR-PSY-N-551.37	551.36	0.67	Temporary	Gravel	New	NO	214		
3	L1	AR-PSY-N-551.38	552.03	1.03	Temporary	Gravel	New	YES	2,232		
3	L1	AR-HT-I-553.26	553.06	0.50	Temporary	Gravel	Improve	YES	142		
3	L1	ALT-MS-553.76	553.56	0.00	Temporary	Gravel	New	YES	411		
3	L1	AR-N-553.76	553.56	2.29	Temporary	Gravel	new	YES	419		
3	L1	AR-GA-N-556.06	555.85	0.71	Temporary	Gravel	New	YES	766		
3	L1	AR-GA-N-556.77	556.56	2.44	Temporary	Gravel	New	YES	976		
3	L1	AR-E-559.21	559.00	0.30	Temporary	Gravel	Existing	YES	216		
3	L1	AR-MS-E-559.51	559.30	0.48	Temporary	Gravel	Existing	YES	187		
3	L1	AR-MLBV-GA-E-559.99	559.78	0.07	Temporary	Gravel	Existing	YES	1,165		
3	L1	SF-N-560.06	559.85	0.30	Temporary	Gravel	New	YES	2,519		
3	L1	MS-N-560.36	560.15	0.12	Temporary	Gravel	New	NO	316		
3	L1	SF-N-560.06	560.27	1.53	Temporary	Gravel	New	YES	2,519		
3	L1	AR-HT-N-562	561.80	4.30	Permanent	Gravel	New	YES	3,745		
3	L1	MS-N-566.3	566.10	0.26	Temporary	Gravel	New	YES	100		
3	L1	AR-XG-HT-N-566.57	566.36	0.04	Temporary	Gravel	New	YES	152		

Spread	Section	Feature Name	Milepost	Miles to Next AR	Road Type	Material	Status	On Centerline	Road Length (feet)	No. AR per Section	Average AR Spacing
3	L1	AR-XG-HT-E-566.57	566.40	0.08	Temporary	Gravel	Existing	NO	387		
3	L1	AR-XG-N-566.69	566.48	0.07	Temporary	Gravel	New	YES	477		
3	L1	AR-MS-E-566.75	566.55	0.21	Temporary	Gravel	Existing	NO	130		
3	L1	AR-GA-E-566.96	566.76	0.52	Temporary	Gravel	Existing	YES	1,541		
3	L2	AR-MS-CAMP-E-567.48	567.28	0.45	Temporary	Gravel	Existing	YES	2,508		
3	L2	CAMP-E-567.94	567.73	0.85	Temporary	Gravel	Existing	NO	563		
3	L2	PSY-SP-N-568.79	568.58	2.34	Temporary	Gravel	New	NO	680		
3	L2	AR-I-571.12	570.92	1.58	Temporary	Gravel	Existing	YES	269		
3	L2	AR-XG-N-572.7	572.50	0.19	Temporary	Gravel	New	YES	340		
3	L2	AR-XG-N-572.89	572.69	1.19	Temporary	Gravel	New	YES	1,021		
3	L2	AR-XG-N-574.09	573.88	1.80	Temporary	Gravel	New	YES	1,317		
3	L2	AR-E-576.1	575.68	0.21	Temporary	Gravel	Existing	NO	608		
3	L2	AR-N-576.1	575.89	1.56	Temporary	Gravel	New	YES	2,502		
3	L2	AR-MLBV-I-577.67	577.45	1.41	Temporary	Gravel	Improve	YES	2,394		
3	L2	AR-N-579.08	578.86	2.28	Temporary	Gravel	New	YES	1,261		
3	L2	AR-PSY-N-581.36	581.14	0.01	Temporary	Gravel	New	YES	282		
3	L2	AR-PSY-N-581.37	581.15	1.12	Temporary	Gravel	New	NO	126		
3	L2	MS-I-582.49	582.27	0.04	Temporary	Gravel	Improve	NO	2,054		
3	L2	AR-HT-E-582.84	582.31	0.31	Temporary	Gravel	Existing	NO	422		
3	L2	AR-HT-N-582.84	582.62	0.99	Temporary	Gravel	New	YES	2,691		
3	L2	SP-E-583.86	583.61	0.24	Temporary	Gravel	Existing	NO	1,120		
3	L2	SP-N-584.08	583.85	4.15	Temporary	Gravel	New	NO	948		
3	L2	AR-XG-N-588.23	588.00	0.31	Temporary	Gravel	New	YES	1,604		
3	L2	AR-XG-N-588.53	588.31	4.30	Temporary	Gravel	New	YES	543		
3	L2	AR-N-592.83	592.61	0.03	Temporary	Gravel	New	YES	4,821		
3	L2	ALT-MS-592.87	592.64	0.97	Temporary	Gravel	New	NO	70		
3	L2	ALT-MS-593.83	593.61	0.00	Temporary	Gravel	New	YES	207		
3	L2	SF-N-593.83	593.61	0.41	Temporary	Gravel	New	YES	2,887		
3	L2	SF-N-593.83	594.02	1.73	Temporary	Gravel	New	YES	2,887		
3	L2	AR-MS-HT-N-595.97	595.75	2.43	Temporary	Gravel	New	YES	3,769		
3	L2	AR-MLBV-CS-HT-N-598.5	598.18	0.05	Permanent	Gravel	New	NO	11,117		
3	L2	SF-N-598.46	598.23	0.63	Temporary	Gravel	New	YES	7,482		

Spread	Section	Feature Name	Milepost	Miles to Next AR	Road Type	Material	Status	On Centerline	Road Length (feet)	No. AR per Section	Average AR Spacing
3	L2	SF-N-598.46	598.86	1.85	Temporary	Gravel	New	YES	7,482		
3	L2	SF-N-600.9	600.71	0.61	Temporary	Gravel	New	YES	5,433		
3	L2	SF-N-600.9	601.32	1.99	Temporary	Gravel	New	YES	5,433		
3	L2	AR-N-603.46	603.31	0.00	Temporary	Gravel	New	YES	7,700		
3	L2	SF-N-603.46	603.31	0.43	Temporary	Gravel	New	YES	5,243		
3	L2	SF-N-603.46	603.74	2.93	Temporary	Gravel	New	YES	5,243		
3	L2	AR-CAMP-HT-N-606.81	606.67	0.22	Temporary	Gravel	New	YES	1,592		
3	L2	PSY-SP-N-606.81	606.89	0.04	Temporary	Gravel	New	NO	879		
3	L2	MS-E-607.07	606.93	0.03	Temporary	Gravel	Existing	NO	86		
3	L2	MS-N-607.07	606.96	0.17	Temporary	Gravel	New	NO	123		
3	L2	MS-N-607.27	607.13	0.53	Temporary	Gravel	New	NO	1,247		
4	A	AR-N-607.8	607.66	1.28	Temporary	Gravel	New	YES	266		
4	A	AR-XG-HT-N-609.09	608.94	0.13	Temporary	Gravel	New	YES	366		
4	A	AR-XG-N-609.21	609.07	2.98	Temporary	Gravel	New	YES	332		
4	A	AR-HT-N-612.19	612.05	0.08	Temporary	Gravel	Existing	YES	225		
4	A	ALT-MS-612.19	612.13	0.31	Temporary	Gravel	New	NO	1,392		
4	A	AR-XG-N-612.59	612.44	0.17	Temporary	Gravel	New	YES	178		
4	A	AR-XG-N-612.75	612.61	1.55	Temporary	Gravel	New	YES	787		
4	A	AR-GA-N-614.3	614.16	0.96	Temporary	Gravel	New	YES	3,084		
4	A	AR-GA-N-615.26	615.12	1.04	Temporary	Gravel	New	YES	2,109		
4	A	AR-MLBV-N-616.31	616.16	0.92	Temporary	Gravel	New	YES	942		
4	A	AR-N-617.22	617.08	0.39	Temporary	Gravel	New	YES	361		
4	A	ALT-MS-617.61	617.47	0.69	Temporary	Gravel	New	NO	511		
4	A	AR-E-618.45	618.16	0.15	Temporary	Gravel	Existing	NO	913		
4	A	AR-N-618.45	618.31	0.20	Temporary	Gravel	New	YES	1,112		
4	A	MS-PSY-E-618.65	618.51	0.87	Temporary	Gravel	Existing	NO	427		
4	A	ALT-MS-619.52	619.38	0.00	Temporary	Gravel	New	NO	387		
4	A	AR-N-619.52	619.38	2.94	Temporary	Gravel	New	YES	267		
4	A	AR-N-622.47	622.32	2.69	Temporary	Gravel	New	YES	1,070		
4	A	AR-XG-N-625.16	625.01	0.18	Temporary	Gravel	New	YES	660		
4	A	ALT-MS-625.33	625.19	0.00	Temporary	Gravel	New	YES	5,830		
4	A	AR-XG-N-625.33	625.19	3.00	Temporary	Gravel	New	YES	378		

Spread	Section	Feature Name	Milepost	Miles to Next AR	Road Type	Material	Status	On Centerline	Road Length (feet)	No. AR per Section	Average AR Spacing
4	A	AR-N-628.33	628.19	1.70	Temporary	Gravel	New	YES	195		
4	A	AR-HT-N-630.04	629.89	0.21	Temporary	Gravel	New	YES	232		
4	A	AR-XG-N-630.24	630.10	0.19	Temporary	Gravel	New	YES	272		
4	A	AR-N-630.43	630.29	0.26	Temporary	Gravel	New	YES	714		
4	A	ALT-MS-630.74	630.55	1.01	Temporary	Gravel	New	NO	3,090		
4	A	AR-XG-MLBV-N-631.7	631.56	0.13	Temporary	Gravel	New	YES	766		
4	A	AR-XG-N-631.84	631.69	2.02	Temporary	Gravel	New	YES	274		
4	A	AR-MS-N-633.85	633.71	0.69	Temporary	Gravel	New	YES	2,721		
4	A	AR-GA-N-634.55	634.40	1.92	Temporary	Gravel	New	YES	3,208		
4	A	ALT-MS-636.47	636.32	0.00	Temporary	Gravel	New	YES	298		
4	A	AR-N-636.47	636.32	1.29	Temporary	Gravel	New	YES	243		
4	A	MS-N-637.78	637.61	0.02	Temporary	Gravel	New	NO	523		
4	A	AR-N-637.78	637.63	2.70	Temporary	Gravel	New	YES	242		
4	A	AR-XG-N-640.47	640.33	0.18	Temporary	Gravel	New	YES	367		
4	A	AR-XG-N-640.65	640.51	0.25	Temporary	Gravel	New	YES	922		
4	A	AR-GA-N-640.91	640.76	0.20	Temporary	Gravel	New	YES	397		
4	A	AR-GA-HT-N-641.1	640.96	6.96	Temporary	Gravel	New	YES	565		
4	A	CAMP-PSY-N-648.08	647.92	0.02	Temporary	Gravel	New	NO	246		
4	A	AR-MLBV-CAMP-PSY-N-	647.94	0.10	Temporary	Gravel	New	YES	730		
4	A	AR-MLBV-CAMP-PSY-I-6	648.04	0.36	Temporary	Gravel	Improve	NO	1,062		
4	A	AR-XG-N-648.55	648.40	0.20	Temporary	Gravel	New	YES	775		
4	A	AR-XG-N-648.75	648.60	1.63	Temporary	Gravel	New	YES	306		
4	A	ALT-MS-650.37	650.23	1.34	Temporary	Gravel	New	YES	232		
4	A	AR-N-651.72	651.57	2.90	Temporary	Gravel	New	YES	546		
4	A	AR-N-654.62	654.47	1.51	Temporary	Gravel	New	YES	1,129		
4	A	AR-MS-N-656.13	655.98	2.83	Temporary	Gravel	New	YES	1,242		
4	A	AR-HT-N-658.96	658.81	2.24	Temporary	Gravel	New	YES	318		
4	A	AR-MLBV-I-661.19	661.05	0.12	Temporary	Gravel	Improve	YES	1,566		
4	A	ALT-MS-661.32	661.17	2.44	Temporary	Gravel	New	NO	261		
4	A	AR-N-663.76	663.61	1.05	Temporary	Gravel	New	YES	6,003		
4	A	AR-XG-N-664.8	664.66	0.07	Temporary	Gravel	New	YES	363		
4	A	AR-XG-N-664.88	664.73	2.65	Temporary	Gravel	New	YES	329		

Spread	Section	Feature Name	Milepost	Miles to Next AR	Road Type	Material	Status	On Centerline	Road Length (feet)	No. AR per Section	Average AR Spacing
4	B	ALT-MS-667.53	667.38	0.00	Temporary	Gravel	New	NO	310		
4	B	AR-N-667.53	667.38	0.59	Temporary	Gravel	New	YES	670		
4	B	ALT-MS-668.12	667.97	0.46	Temporary	Gravel	New	NO	97		
4	B	AR-N-668.58	668.43	1.69	Temporary	Gravel	New	YES	1,250		
4	B	AR-N-670.27	670.12	1.97	Temporary	Gravel	New	YES	514		
4	B	AR-PSY-N-672.24	672.09	0.78	Temporary	Gravel	Improve	YES	1,788		
4	B	ALT-MS-673.02	672.87	1.03	Temporary	Gravel	New	NO	234		
4	B	ALT-MS-674.05	673.90	0.71	Temporary	Gravel	New	NO	292		
4	B	AR-TL-CS-MLBV-MS-HT-	674.61	1.67	Permanent	Gravel	New	YES	105,301		
4	B	SP-E-676.43	676.28	9.30	Temporary	Gravel	Existing	NO	5,686		
4	B	MS-N-685.73	685.58	7.99	Temporary	Gravel	New	NO	997		
4	B	AR-CAMP-PSY-N-693.72	693.57	4.98	Temporary	Gravel	New	YES	146		
4	B	MS-N-698.7	698.55	5.97	Temporary	Gravel	New	YES	88		
4	C	SF-N-704.67	704.52	0.56	Temporary	Gravel	New	YES	2,930		
4	C	SF-N-704.67	705.08	10.50	Temporary	Gravel	New	YES	2,930		
4	C	ALT-MS-715.73	715.58	4.51	Temporary	Gravel	New	YES	78		
4	C	SF-N-720.24	720.09	1.28	Temporary	Gravel	New	YES	7,386		
4	C	PSY-MS-N-721.52	721.37	0.00	Temporary	Gravel	New	YES	1,145		
4	C	SF-N-720.24	721.37	3.48	Temporary	Gravel	New	YES	7,386		
4	C	SF-N-725	724.85	1.26	Temporary	Gravel	New	YES	7,303		
4	C	SF-N-725	726.11	1.54	Temporary	Gravel	New	YES	7,303		
4	C	SF-N-727.8	727.65	0.46	Temporary	Gravel	New	YES	2,767		
4	C	SF-N-727.8	728.11	1.98	Temporary	Gravel	New	YES	2,767		
4	C	ALT-MS-730.24	730.09	4.84	Temporary	Gravel	New	YES	160		
4	C	ALT-MS-735.08	734.93	4.90	Temporary	Gravel	New	YES	25		
4	C	MS-N-739.99	739.83	5.06	Temporary	Gravel	New	YES	254		
4	D	AR-HT-CAMP-PSY-N-745	744.89	0.99	Temporary	Gravel	New	YES	7,695		
4	D	AR-CAMP-PSY-I-745.04	745.88	3.36	Temporary	Gravel	Improve	NO	31,565		
4	D	AR-MLBV-CS-E-749.39	749.24	1.56	Permanent	Gravel	Existing	YES	30,169		
4	D	MS-E-750.95	750.80	0.00	Temporary	Gravel	Existing	YES	9,555		
4	D	MS-N-750.95	750.80	1.79	Temporary	Gravel	New	YES	156		
4	D	AR-I-749.39	752.59	3.55	Temporary	Gravel	Improve	NO	43,325		

Spread	Section	Feature Name	Milepost	Miles to Next AR	Road Type	Material	Status	On Centerline	Road Length (feet)	No. AR per Section	Average AR Spacing
4	D	AR-N-756.29	756.14	3.84	Temporary	Gravel	New	YES	4,122		
4	D	MS-N-760.13	759.98	5.30	Temporary	Gravel	New	YES	100		
4	D	AR-N-765.43	765.28	0.31	Temporary	Gravel	New	YES	668		
4	D	MOF-N-765.74	765.59	0.05	Temporary	Gravel	New	NO	632		
4	D	PSY-N-765.8	765.64	0.19	Temporary	Gravel	New	YES	505		
4	D	PSY-N-763.13	765.83	0.00	Temporary	Gravel	New	YES	261		
4	D	CAMP-PSY-N-766.22	765.83	0.15	Temporary	Gravel	New	NO	805		
4	D	MOF-ALT-N-766.34	765.98	0.09	Temporary	Gravel	New	NO	32		
4	D	MOF-ALT-N-766.36	766.07	0.12	Temporary	Gravel	New	NO	30		
4	D	ALT-MOF-N-766.34	766.19	0.02	Temporary	Gravel	New	YES	977		
4	D	ALT-MOF-N-766.36	766.21	27.08	Temporary	Gravel	New	NO	700		
4	E	AR-N-793.44	793.29	10.09	Temporary	Gravel	New	YES	156		
4	E	AR-CAMP-PSY-N-804.06	803.38	-803.38	Temporary	Gravel	New	NO	220		